ME 140 Final Report

Team Brady Cheated

Zach Stuart, Richie Tran, Vignesh Venkataraman, Jeanny Wang

Objective:
Through iterations of experimental firing and numerical analysis, we aim to design a **fuel grain** and **nozzle** that increases the **specific thrust** of a hybrid rocket. We affect the performance of the rocket through design parameters involving fuel grain patterns, fuel grain lengths, nozzle area ratios, and nozzle compression-expanding geometries.

Preliminary Analysis:
Our stock fire in lab showed us that our initial mixture ratio was far from ideal. Based on the following equation:

$$I_{sp} = \frac{c^* C_f}{g}$$

we saw that we could increase thrust (and also specific impulse) by maximizing the product of c^* and $\dot{m}$. To do this, we would have to significantly decrease the mixture ratio. The stock run had a mixture ratio of ~24. We wanted to design a fuel grain that would result in a mixture ratio of roughly 2 - 5. Our intuition told us that we would need to significantly increase the surface area of fuel in order to increase the ratio of fuel to oxygen. In order to minimize the amount of fuel burned, we chose a 5.375” fuel grain design for all our fires.

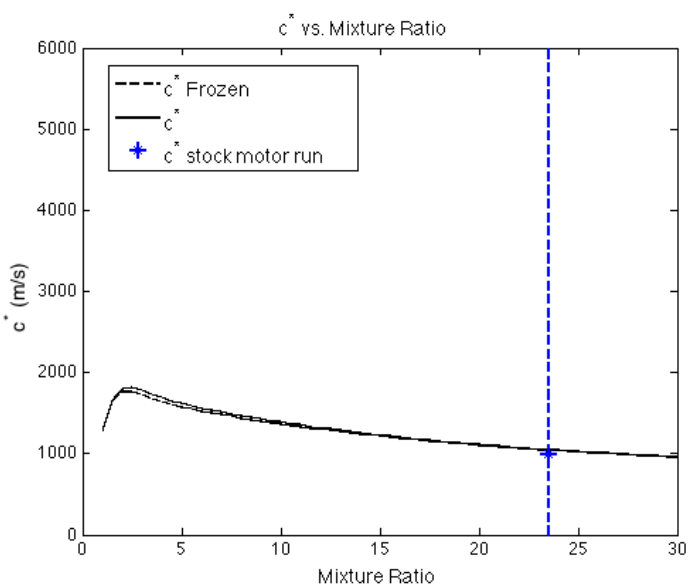

Iterations and Testing:

Because our first fuel grain was out of specification, we initially could not iterate on fuel grain design. As a result, we began by holding fuel grain design constant for Firings 1 & 2 and altering nozzle design. We then took our better performing nozzle design, and between Firings 2 & 3, held our nozzle design constant and altered fuel grain design.

Fire #1

Below are the initial nozzle design, fuel grain pattern, and resulting burn.

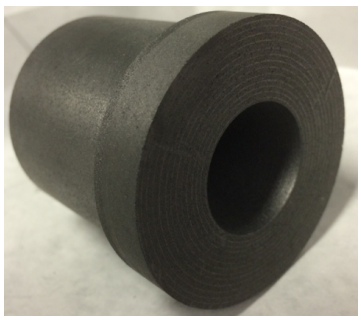
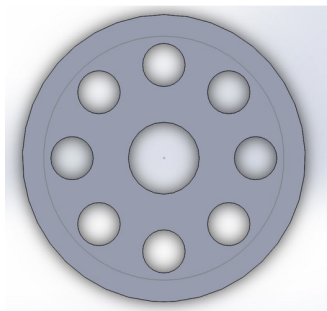
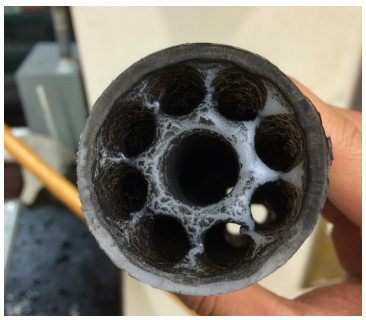

The nozzle had an outlet to throat area ratio of 6.25. The surface area of the fuel grain was 48.97 in^2, and the mass of fuel burned was 53.9 g.

The specific impulse from the fire was 123.79 s^{-1}. From the graph below, it is obvious that we fouled significantly.

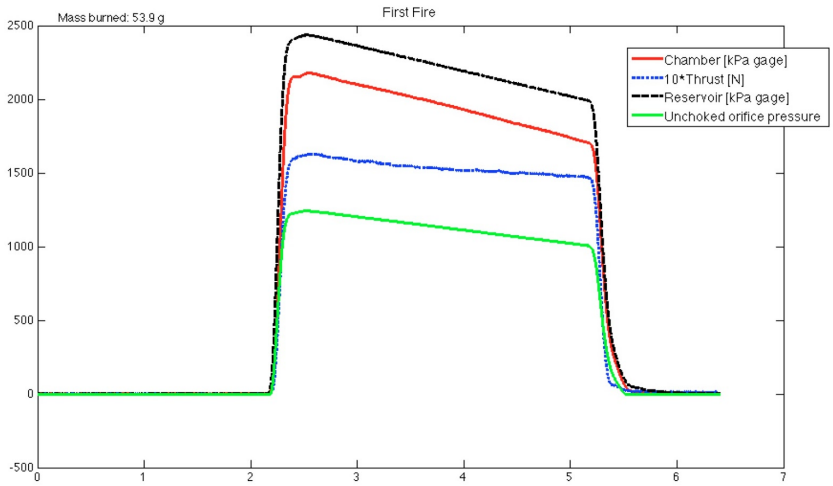

Fire #2

While holding the fuel grain pattern constant, we altered the nozzle by increasing the throat area. As a result, we decreased the area ratio to 4.86 to avoid fouling. We changed the design to the figure below. From the firing, the mass burned was 45.7 g and the specific impulse was 129.18 s^{-1}. The graph below shows we did not foul.

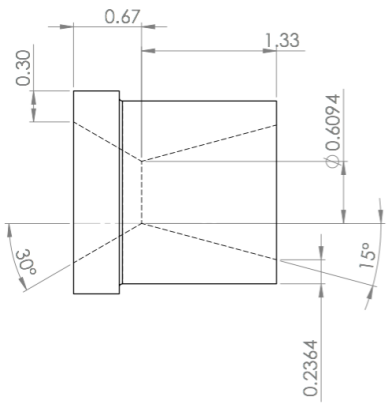

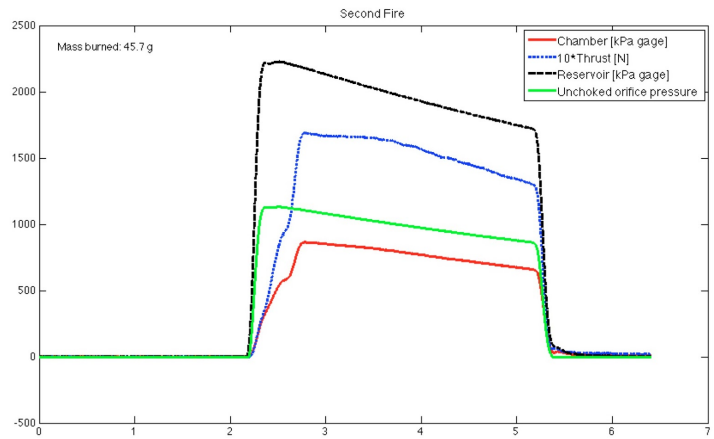

Fire #3: Final Design and Results

For the final firing, we retained the nozzle from the 2nd firing and held the nozzle design constant while altering the fuel grain pattern. The redesigned fuel pattern and resulting burn are shown below. We added holes around our original fuel grain design to increase fuel burn and decrease mixture ratio, with both parameter changes serving to to improve c^* and C_f. We reduced the diameter of the middle concentric holes and brought them closer to the center to avoid burn-through and/or chunks flying off. The final surface area was 62.82 in^2 and the mass burned was 61.8 g.

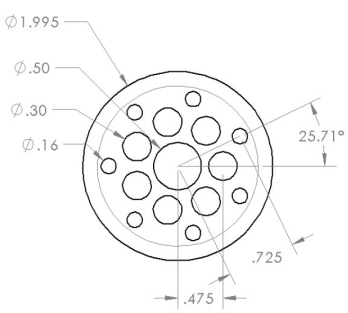

Our performance improved significantly with a specific impulse of 153.15 s^{-1} without fouling, as shown in the graph below.

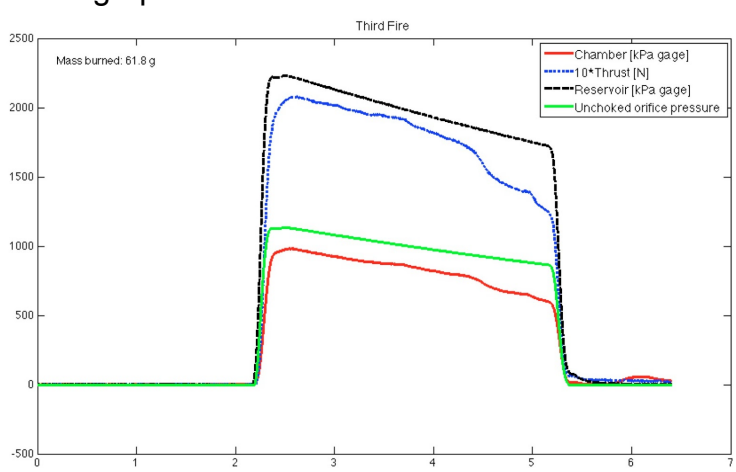

Analysis:

From the Boardman reading, we obtained equations to develop a regression relationship. Using the equations $R_{dot} = aG_o^{\,n}$ and $G_o = \frac{m_{dot,\,O2}}{A_{port}}$ and three data points for R_{dot} and G_o, we obtained estimates for the constants a and n using the method of least squares fitting. Though Boardman states that *n* has been observed to vary between 0.4 and 0.7 and *a* to vary from 0.05 to 0.2 in/s, we obtained values of *n* = 0.14 and *a* = 0.19. These constants do not exactly match with the Boardman reading but still provided a fairly accurate general trend. Using this analysis, we could obtain estimates of the mixture ratio by using the equations $m_{dot,\,fuel} = rho * L * p * r_{dot}$ and $mix_ratio = \frac{m_{dot,O2}}{m_{dot,\,fuel}}$, with *p* being the perimeter of the fuel grain at a given cross-sectional area and *L* being the length of the fuel grain. We found from the analysis that our first fuel grain design should have had a mix ratio of 7.2593 and our second fuel grain design a mix ratio of 6.6729. Experimental data shows that our first fuel grain had a mix ratio of 6.0576 and our second had a mix ratio of 4.4822. Therefore, though our analysis did not exactly match with the experimental results, the regression equation correctly predicted the trend that increasing the area of the port would decrease our mix ratio, a useful piece of information that affected how we designed our final fuel grain.

Concluding Remarks:

This project was a valuable example of the challenges of performing theoretical analysis of a system, designing, manufacturing, testing, and analysing again. We learned that there are unexpected problems that hinder progress in each of these steps, particularly during manufacturing. As we learned in ME 203, it is really important to design with manufacturing methods in mind. As we were restricted to manual mill and lathe, we designed simple patterns. We changed this design based on analysis of our firings, but still had to balance desired performance with manufacturability and time restrictions. This was a useful exercise in that we will see similar challenges in industry. The project was also **simply** a fantastic exercise in team building and collaborative efforts, both among our group members and with the class as a whole. Such practical experience will be invaluable for all of us going forward.