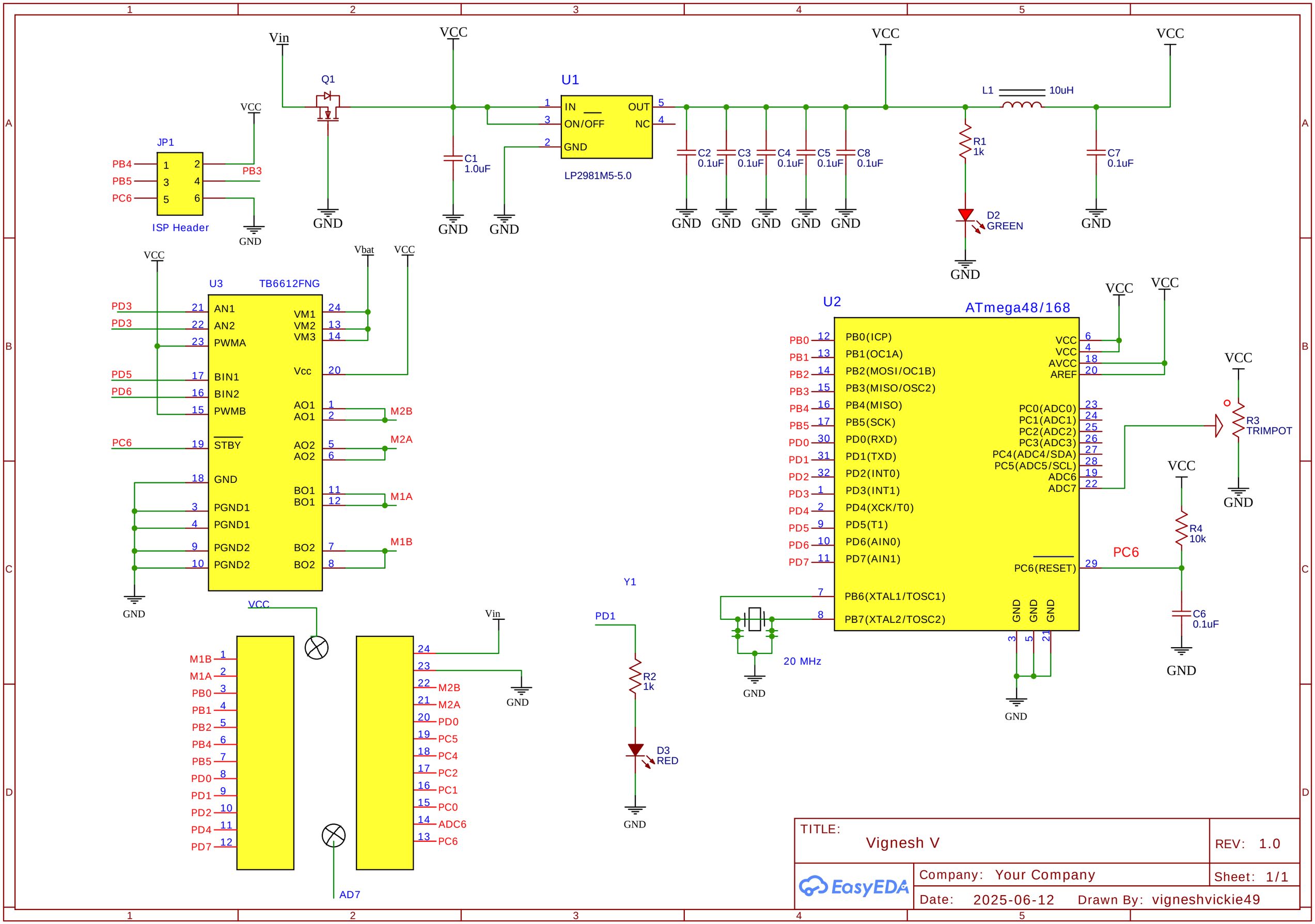


TITLE: Vignesh V

REV: 1.0

Company: Your Company

Sheet: 1/1

Date: 2025-06-12

Drawn By: vigneshvickie49