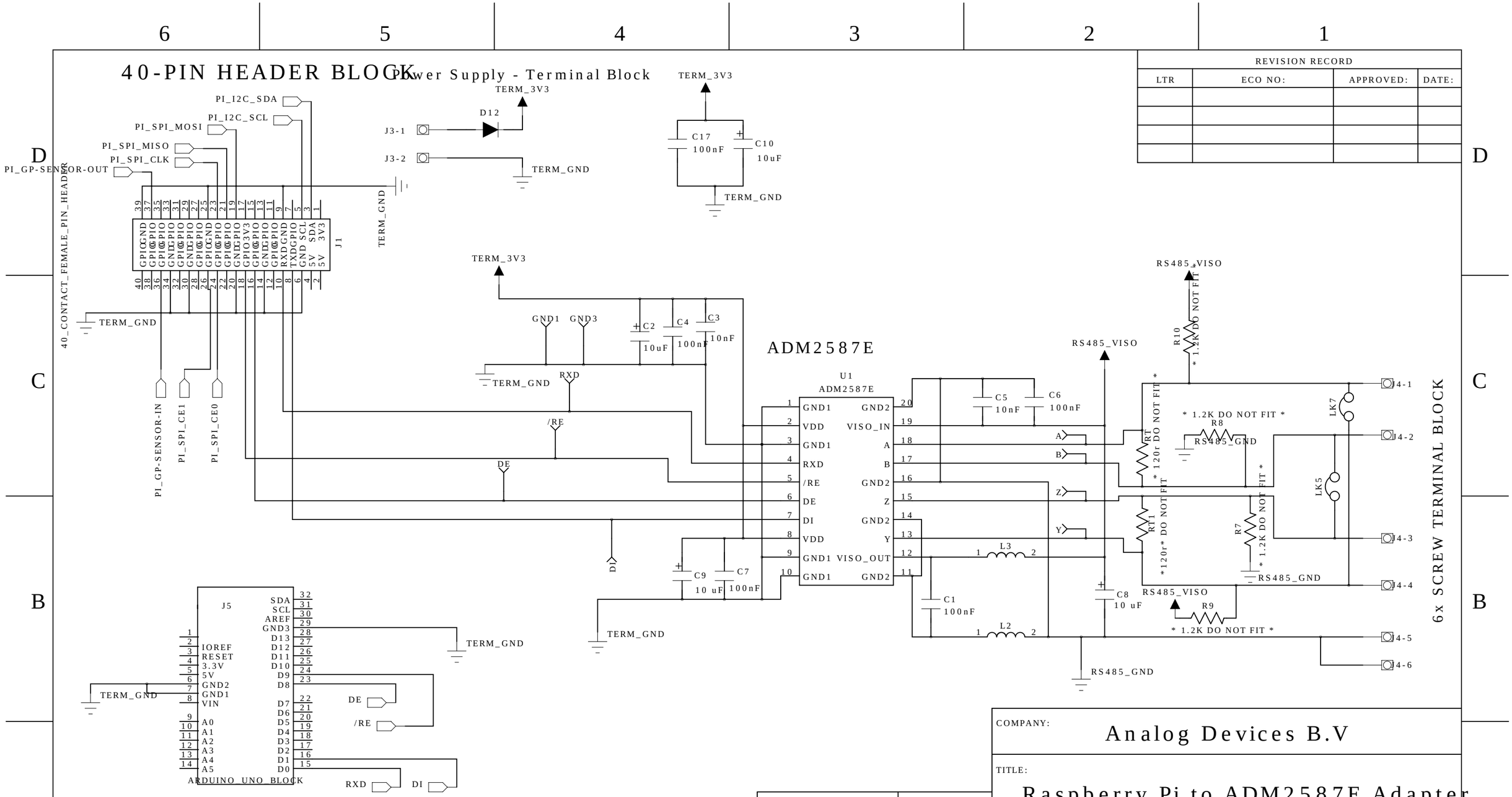

REVISION RECORD			
LTR	ECO NO:	APPROVED:	DATE:

DRAWN: Eoghan Mac Cuarta	DATED: 09/02/16
CHECKED:	DATED:
QUALITY CONTROL:	DATED:
RELEASED: <Released By>	DATED: <Release Date>

COMPANY: Analog Devices B.V

TITLE: Raspberry Pi to ADM2587E Adapter

CODE:	SIZE:	DRAWING NO:	REV:
		REV.8	

SCALE: <Scale> SHEET: 1 OF 2

REVISION RECORD			
LTR	ECO NO:	APPROVED:	DATE:

I2C ISOLATOR

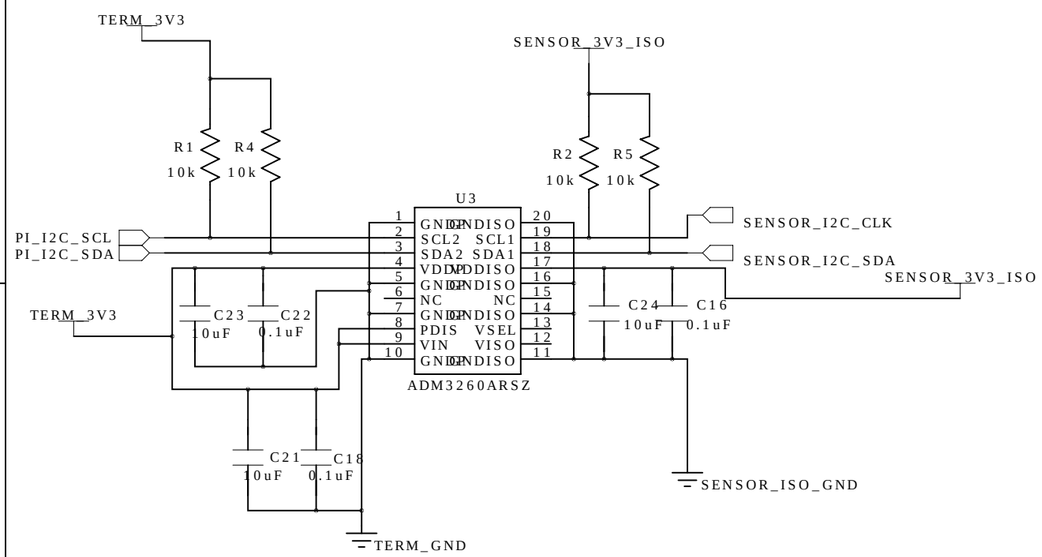

SPISOLATOR

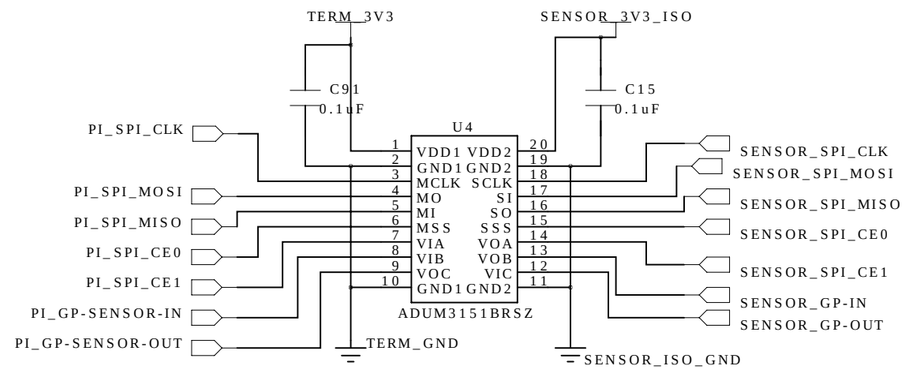

14-PIN HEADER BLOCK

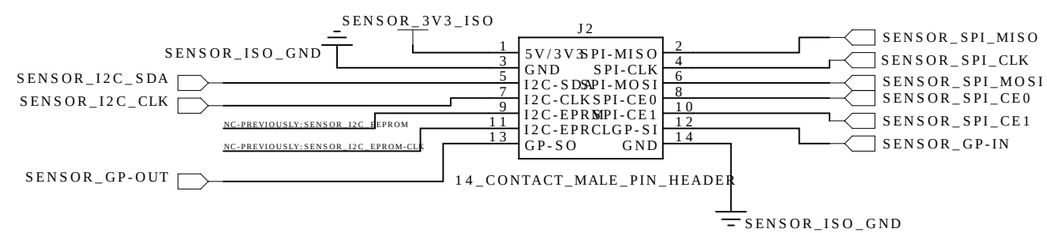

isoPOWER - ADuM5000

Note: Tie VSEL to VISO for 5Viso output
Tie VSEL to ground for 3.3Viso output (current configuration)

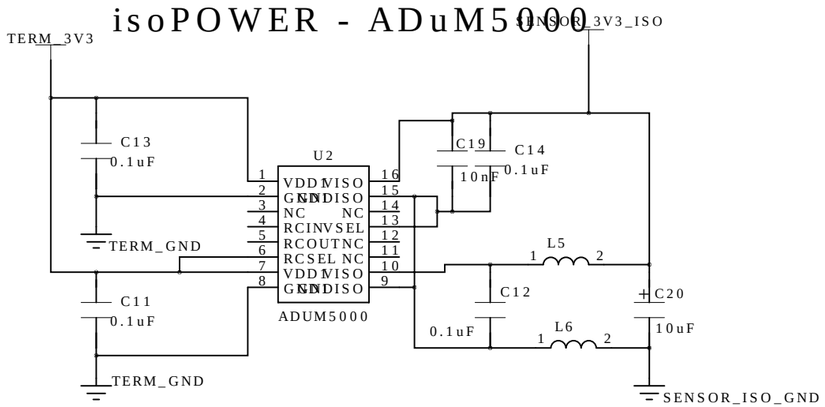

DRAWN: Eoghan Mac Cuarta	DATED: 09/02/16	COMPANY: Analog Devices B.V	
CHECKED: <Checked By>	DATED: <Checked Date>	TITLE: Raspberry Pi to ADM2587E Adapter	
QUALITY CONTROL: <QC By>	DATED: <QC Date>	CODE: <Code>	SIZE: B / DRAWING NO: REV.8 <Revision> / REV:
RELEASED: <Released By>	DATED: <Release Date>	SCALE: <Scale>	SHEET: 2 OF 2