PROJECT DOCUMENTATION

Automated Lighting System

Created By: Viktoria Georgieva

Contents:

Description	3
Parts	3
Block Scheme	4
Electrical Scheme	4
Source Code	5

Desription:

This project is an embedded system made with Autodesk's Tinkercad. It can support 3 rooms, each of them containing 1 light bulb. You can use the switch to turn the system on & off. The lights are turned on whenever an object is placed within range of the distance sensors. The brightness can be controlled using the potentiometers.

Project files and a demonstration video can be found at GitHub: https://github.com/vikigg/Coding-Samples

Parts:

Quantity	Component
1	Arduino Uno R3
3	Ultrasonic Distance Sensor
3	Light bulb
3	250 kΩ, Potentiometer
1	Slideswitch

Block Scheme:

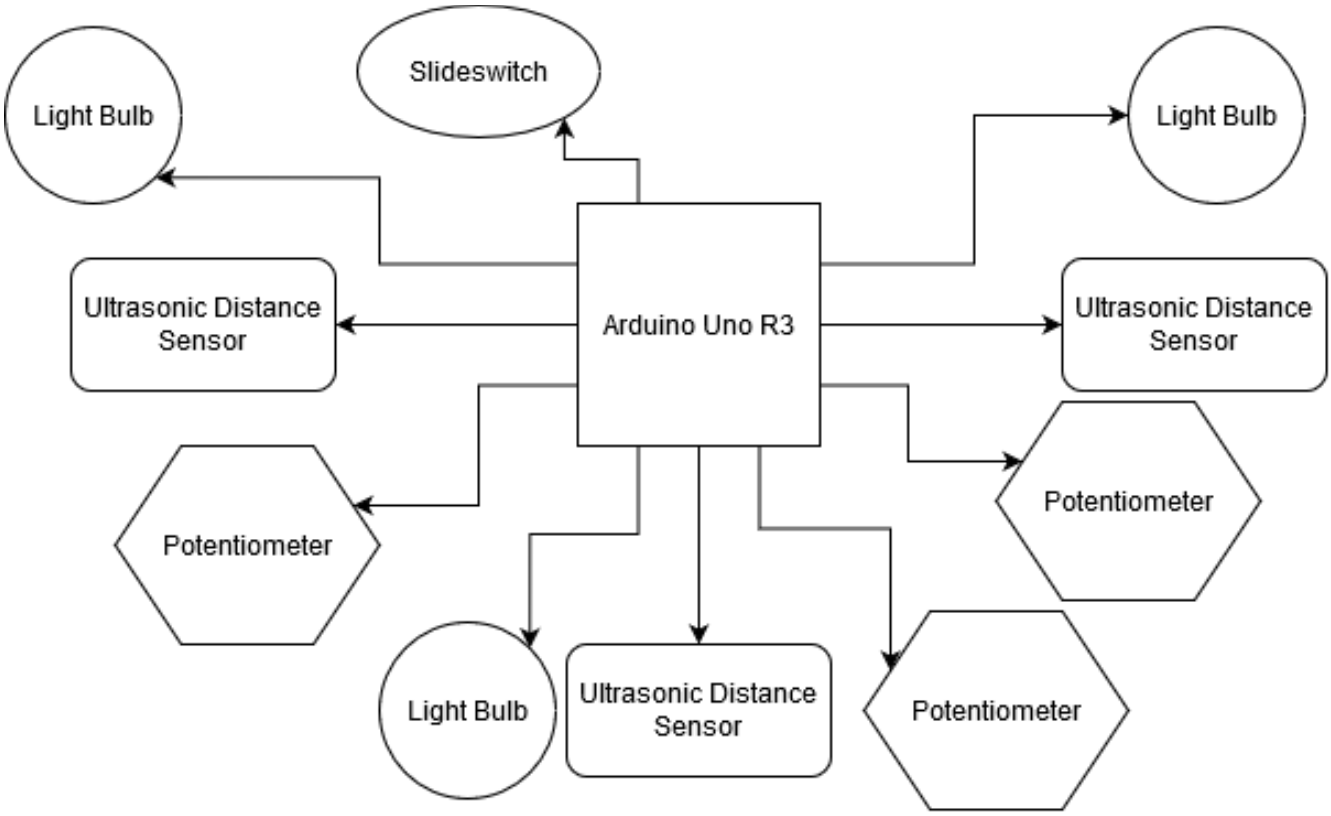

Electrical Scheme:

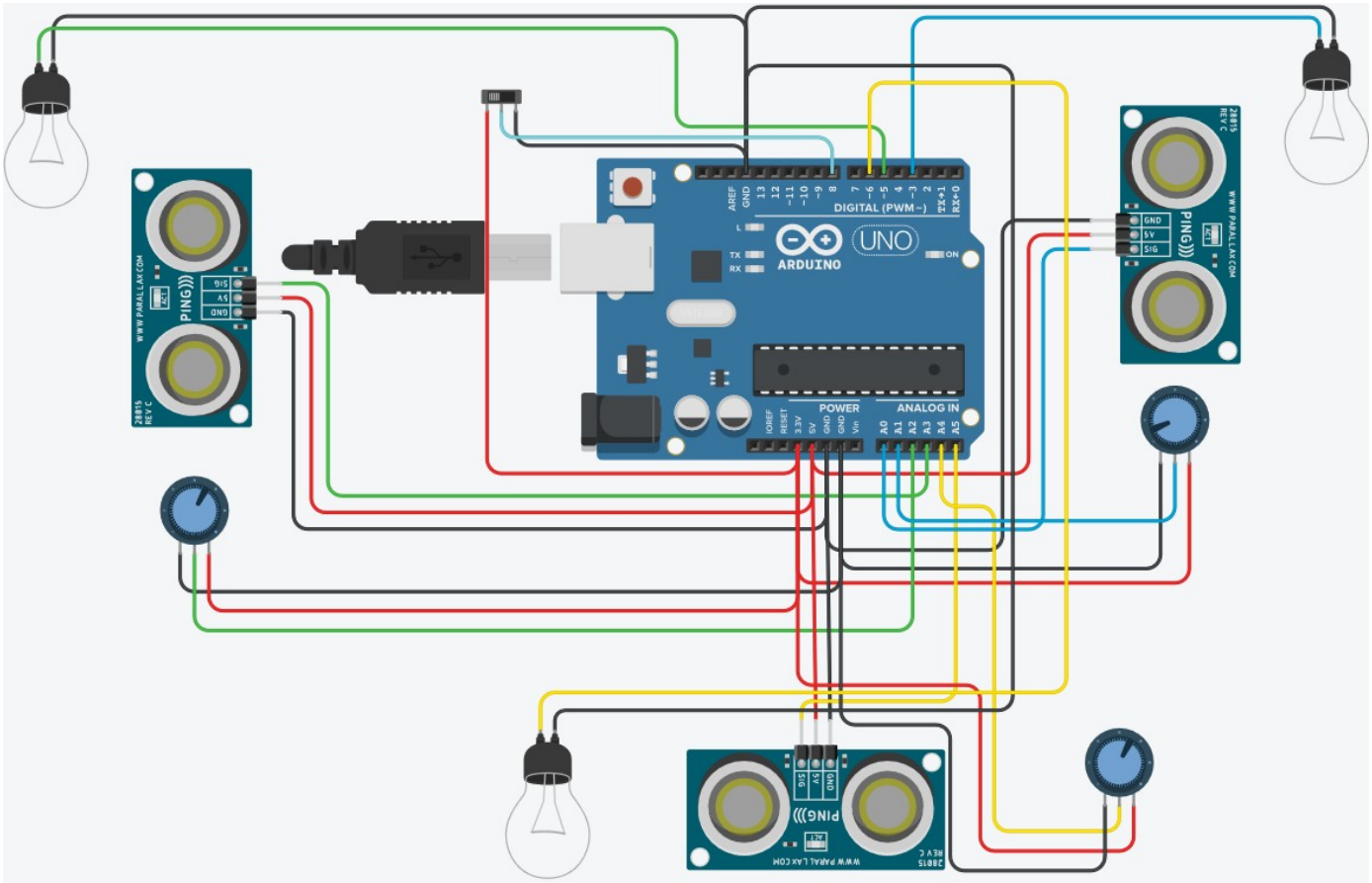

Source Code:

```
//preparing the pins

const int distanceSensorPinRoom1 = A0;
const int lightsPinRoom1 = 3;
const int potentiometerPinRoom1 = A1;

const int distanceSensorPinRoom2 = A3;
const int lightsPinRoom2 = 5;
const int potentiometerPinRoom2 = A2;

const int distanceSensorPinRoom3 = A5;
const int lightsPinRoom3 = 6;
const int potentiometerPinRoom3 = A4;

const int switchPin = 8;

void setup()
{
  pinMode(lightsPinRoom1, OUTPUT);
  pinMode(potentiometerPinRoom1, INPUT);
  pinMode(lightsPinRoom2, OUTPUT);
  pinMode(potentiometerPinRoom2, INPUT);
  pinMode(lightsPinRoom3, OUTPUT);
  pinMode(potentiometerPinRoom3, INPUT);
  pinMode(switchPin, INPUT);
}

void loop()
{
  // max distance for the object to be at, to be in the green zone
  const int greenZoneDistance = 335;

  int switchStatus;
  switchStatus = digitalRead(switchPin);
  if(switchStatus==HIGH)
  {
  //code for Room 1

  /* creating variables for duration of the ping,
```

```
  and the distance result in centimeters */
  long durationRoom1, cmRoom1;

  /* giving a short LOW pulse beforehand to ensure
  a clean HIGH pulse: */
  pinMode(distanceSensorPinRoom1, OUTPUT);
  digitalWrite(distanceSensorPinRoom1, LOW);
  digitalWrite(distanceSensorPinRoom1, HIGH);
  digitalWrite(distanceSensorPinRoom1, LOW);

  // getting the distance from the sensor to the object
  pinMode(distanceSensorPinRoom1, INPUT);
  durationRoom1 = pulseIn(distanceSensorPinRoom1, HIGH);
  cmRoom1 = microsecondsToCentimeters(durationRoom1);

  //controlling the brightness of the light with a potentiometer
  int potentiometerStatusRoom1 =
analogRead(potentiometerPinRoom1);

  // turning on the bulbs if the object is in the green zone
  if(cmRoom1 < greenZoneDistance)
  {
        analogWrite(lightsPinRoom1, potentiometerStatusRoom1);
  }
  else
  {
        digitalWrite(lightsPinRoom1, LOW);
  }

  delay(100);

  //code for Room 2

  /* creating variables for duration of the ping,
  and the distance result in centimeters */
  long durationRoom2, cmRoom2;

  /* giving a short LOW pulse beforehand to ensure
  a clean HIGH pulse: */
  pinMode(distanceSensorPinRoom2, OUTPUT);
  digitalWrite(distanceSensorPinRoom2, LOW);
  digitalWrite(distanceSensorPinRoom2, HIGH);
```

```
  digitalWrite(distanceSensorPinRoom2, LOW);

  // getting the distance from the sensor to the object
  pinMode(distanceSensorPinRoom2, INPUT);
  durationRoom2 = pulseIn(distanceSensorPinRoom2, HIGH);
  cmRoom2 = microsecondsToCentimeters(durationRoom2);

  //controlling the brightness of the light with a potentiometer
  int potentiometerStatusRoom2 =
analogRead(potentiometerPinRoom2);

  // turning on the bulbs if the object is in the green zone
  if(cmRoom2 < greenZoneDistance)
  {
        analogWrite(lightsPinRoom2, potentiometerStatusRoom2);
  }
  else
  {
        digitalWrite(lightsPinRoom2, LOW);
  }

  delay(100);

  //code for Room 3

  /* creating variables for duration of the ping,
  and the distance result in centimeters */
  long durationRoom3, cmRoom3;

  /* giving a short LOW pulse beforehand to ensure
  a clean HIGH pulse: */
  pinMode(distanceSensorPinRoom3, OUTPUT);
  digitalWrite(distanceSensorPinRoom3, LOW);
  digitalWrite(distanceSensorPinRoom3, HIGH);
  digitalWrite(distanceSensorPinRoom3, LOW);

  // getting the distance from the sensor to the object
  pinMode(distanceSensorPinRoom3, INPUT);
  durationRoom3 = pulseIn(distanceSensorPinRoom3, HIGH);
  cmRoom3 = microsecondsToCentimeters(durationRoom3);

  //controlling the brightness of the light with a potentiometer
```

```
  int potentiometerStatusRoom3 =
analogRead(potentiometerPinRoom3);

  // turning on the bulbs if the object is in the green zone
  if(cmRoom3 < greenZoneDistance)
  {
        analogWrite(lightsPinRoom3, potentiometerStatusRoom3);
  }
  else
  {
        digitalWrite(lightsPinRoom3, LOW);
  }

  delay(100);
  }
}

long microsecondsToCentimeters(long microseconds)
{
  return microseconds / 29 / 2;
}
```