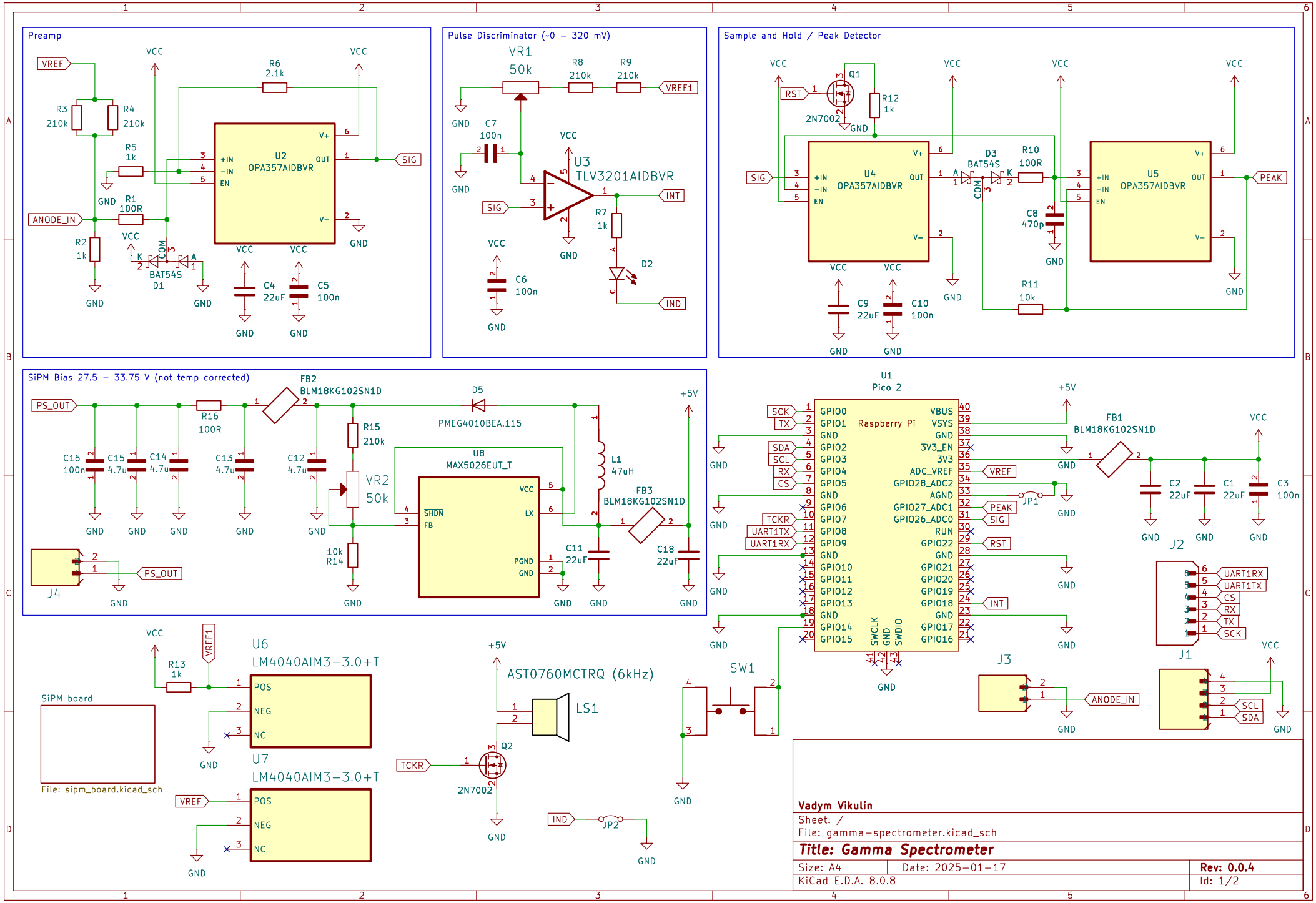
Preamp
VREF
VCC
R6
2.1k
R3
210k
R4
210k
R5
1k
U2
OPA357AIDBVR
+IN
−IN
EN
V+
OUT
V−
SIG
GND
R1
100R
ANODE_IN
R2
1k
COM
BAT54S
D1
C4
22uF
C5
100n
Pulse Discriminator (~0 – 320 mV)
VR1
50k
R8
210k
R9
210k
VREF1
C7
100n
U3
TLV3201AIDBVR
INT
R7
1k
D2
IND
C6
100n
Sample and Hold / Peak Detector
RST
Q1
2N7002
R12
1k
U4
OPA357AIDBVR
D3
BAT54S
R10
100R
C8
470p
U5
OPA357AIDBVR
PEAK
R11
10k
C9
22uF
C10
100n
SiPM Bias 27.5 – 33.75 V (not temp corrected)
PS_OUT
R16
100R
FB2
BLM18KG102SN1D
D5
PMEG4010BEA.115
+5V
C16
100n
C15
4.7u
C14
4.7u
C13
4.7u
C12
4.7u
R15
210k
VR2
50k
U8
MAX5026EUT_T
SHDN
FB
VCC
LX
PGND
L1
47uH
FB3
BLM18KG102SN1D
C11
22uF
C18
22uF
10k
R14
J4
U1
Pico 2
Raspberry Pi
GPIO0
GPIO1
GPIO2
GPIO3
GPIO4
GPIO5
GPIO6
GPIO7
GPIO8
GPIO9
GPIO10
GPIO11
GPIO12
GPIO13
GPIO14
GPIO15
VBUS
VSYS
3V3_EN
3V3
ADC_VREF
GPIO28_ADC2
AGND
GPIO27_ADC1
GPIO26_ADC0
RUN
GPIO22
GPIO21
GPIO20
GPIO19
GPIO18
GPIO17
GPIO16
SWCLK
SWDIO
SCK
TX
SDA
SCL
RX
CS
TCKR
UART1TX
UART1RX
JP1
FB1
BLM18KG102SN1D
C2
22uF
C1
22uF
C3
100n
J2
J1
J3
ANODE_IN
SW1
SiPM board
File: sipm_board.kicad_sch
R13
1k
U6
LM4040AIM3-3.0+T
POS
NEG
NC
U7
LM4040AIM3-3.0+T
AST0760MCTRQ (6kHz)
LS1
Q2
2N7002
JP2
Vadym Vikulin
Sheet: /
File: gamma-spectrometer.kicad_sch
Title: Gamma Spectrometer
Size: A4
Date: 2025-01-17
Rev: 0.0.4
KiCad E.D.A. 8.0.8
Id: 1/2

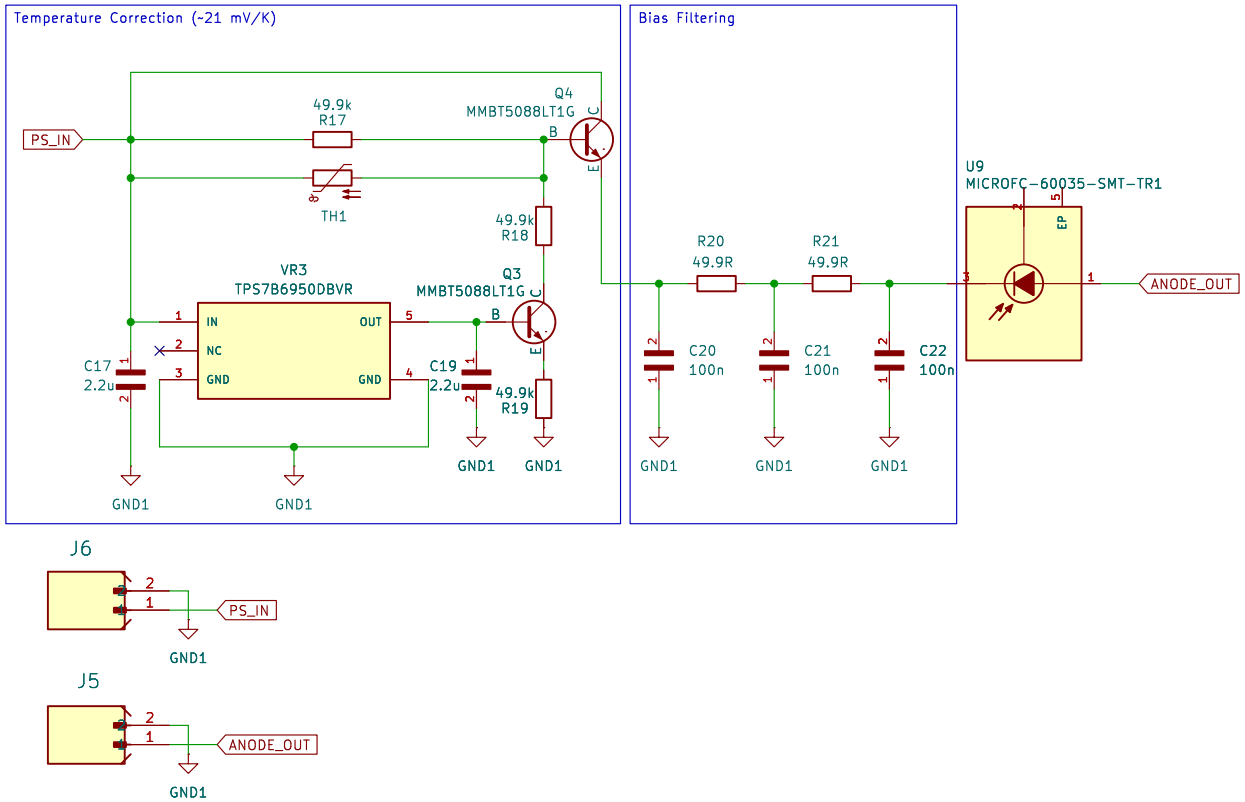

Vadym Vikulin

Sheet: /SiPM board/
File: sipm_board.kicad_sch

Title: SiPM Board

Size: A4	Date: 2025-01-22	**Rev: 0.0.4**
KiCad E.D.A. 8.0.8		Id: 2/2