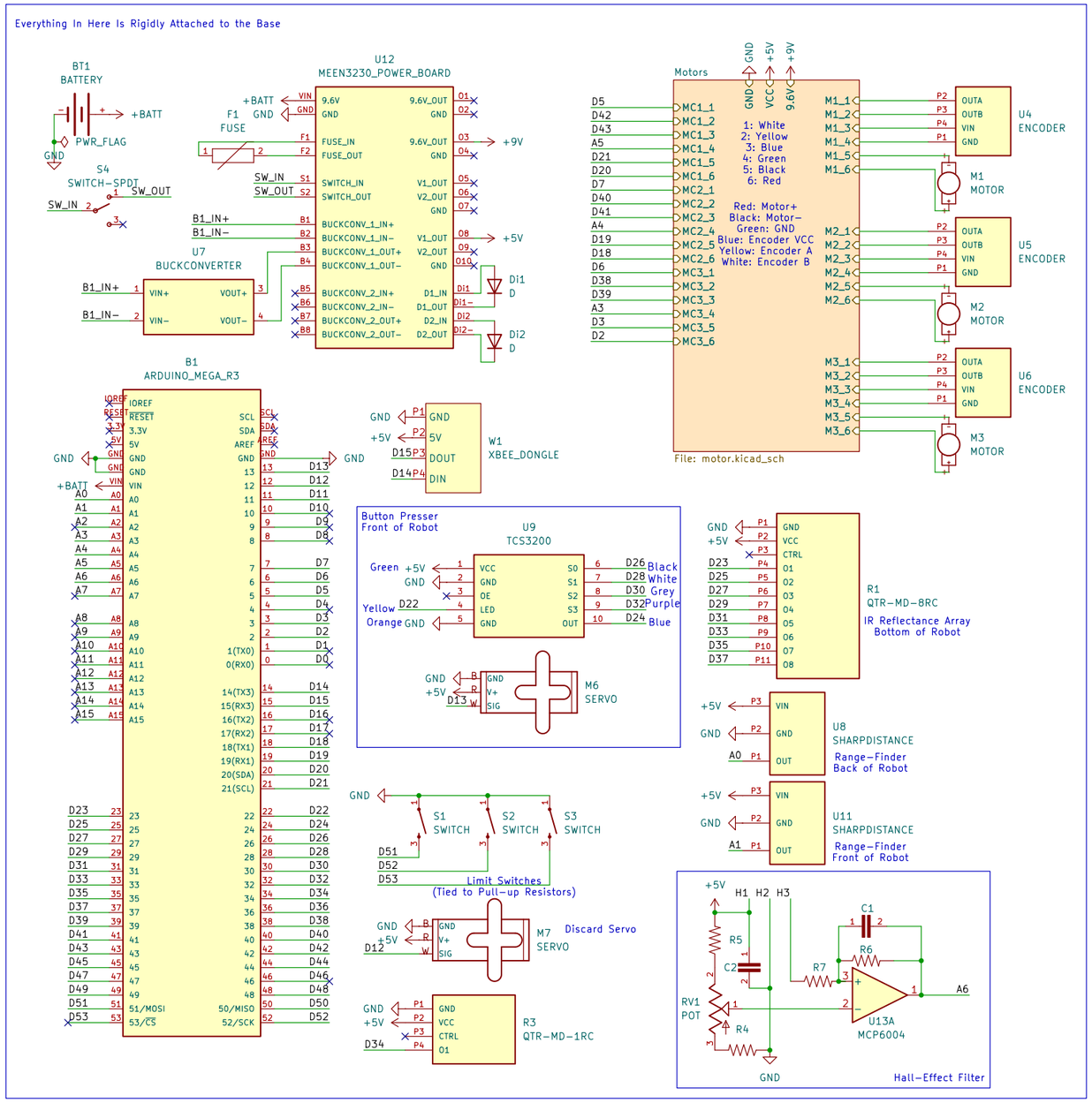
Everything In Here Is Rigidly Attached to the Base
BT1
BATTERY
+BATT
PWR_FLAG
GND
S4
SWITCH-SPDT
SW_OUT
SW_IN
U12
MEEN3230_POWER_BOARD
F1
FUSE
SW_IN
SW_OUT
B1_IN+
B1_IN-
U7
BUCKCONVERTER
VIN+
VIN-
VOUT+
VOUT-
+9V
+5V
Di1
D
Di2
D
B1
ARDUINO_MEGA_R3
W1
XBEE_DONGLE
GND
5V
DOUT
DIN
D15
D14
Motors
File: motor.kicad_sch
1: White
2: Yellow
3: Blue
4: Green
5: Black
6: Red
Red: Motor+
Black: Motor-
Green: GND
Blue: Encoder VCC
Yellow: Encoder A
White: Encoder B
U4
ENCODER
U5
ENCODER
U6
ENCODER
M1
MOTOR
M2
MOTOR
M3
MOTOR
Button Presser
Front of Robot
U9
TCS3200
Green
Yellow
Orange
Black
White
Grey
Purple
Blue
M6
SERVO
R1
QTR-MD-8RC
IR Reflectance Array
Bottom of Robot
U8
SHARPDISTANCE
Range-Finder
Back of Robot
U11
SHARPDISTANCE
Range-Finder
Front of Robot
S1
SWITCH
S2
SWITCH
S3
SWITCH
Limit Switches
(Tied to Pull-up Resistors)
M7
SERVO
Discard Servo
R3
QTR-MD-1RC
Hall-Effect Filter
RV1
POT
R4
R5
R6
R7
C1
C2
U13A
MCP6004
A6

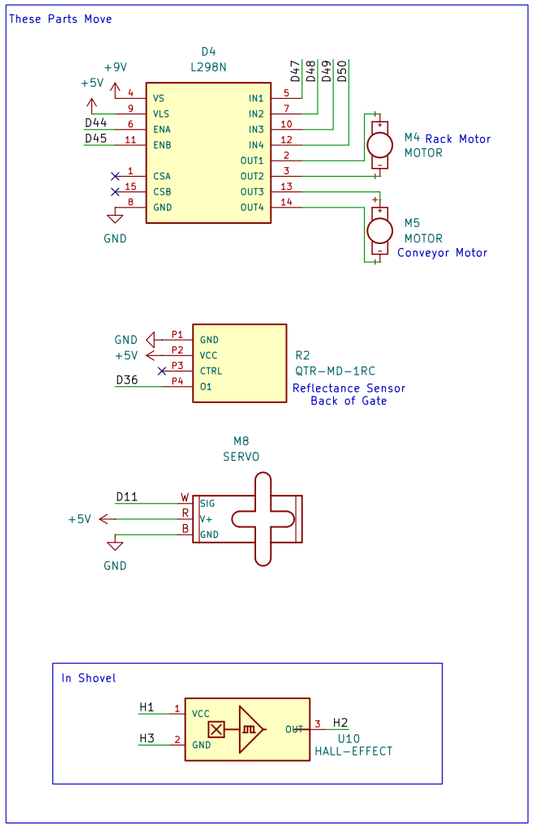
These Parts Move
D4
L298N
M4 Rack Motor
MOTOR
M5
MOTOR
Conveyor Motor
R2
QTR-MD-1RC
Reflectance Sensor
Back of Gate
M8
SERVO
In Shovel
U10
HALL-EFFECT

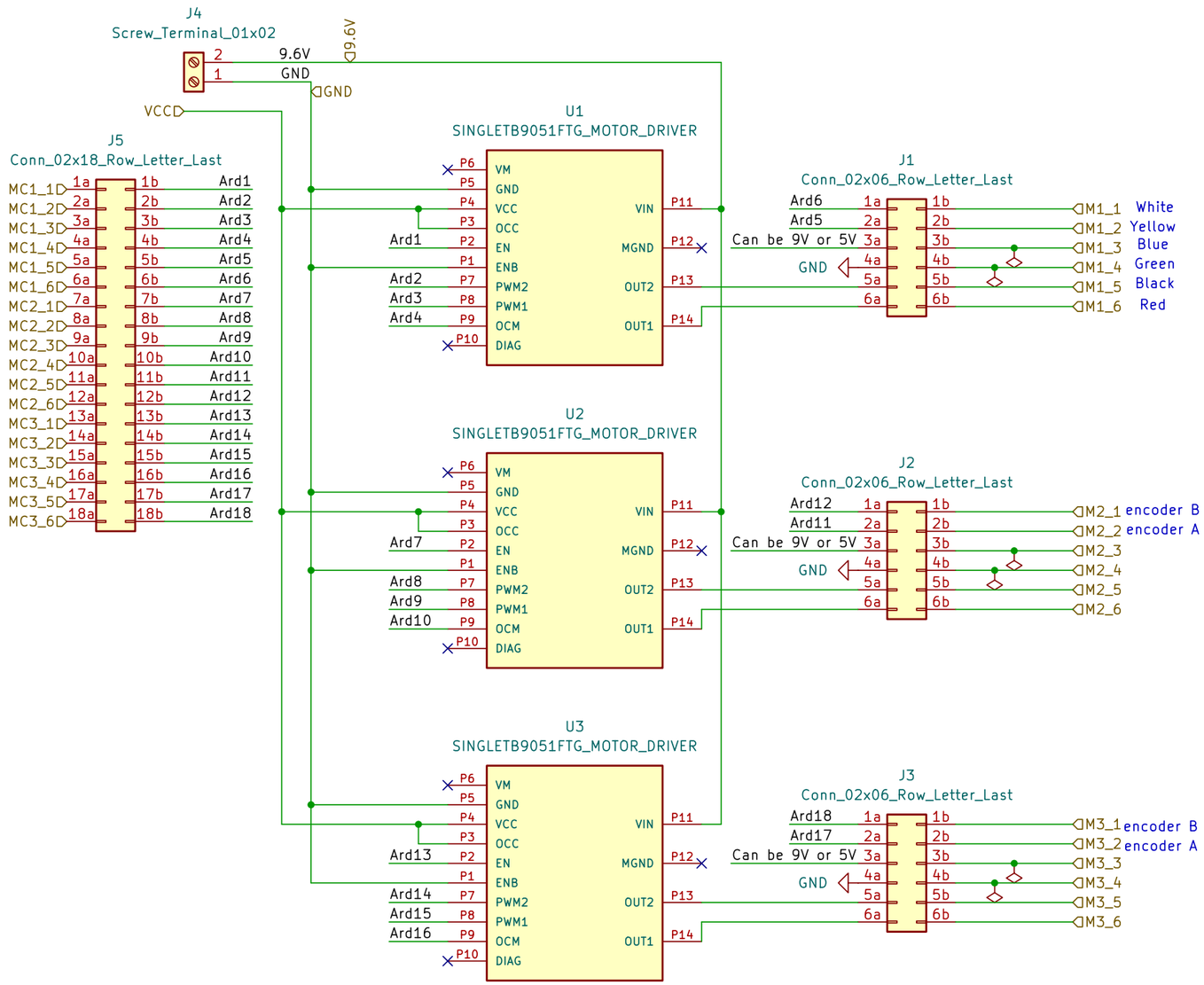
J4
Screw_Terminal_01x02
9.6V
GND
VCC
J5
Conn_02x18_Row_Letter_Last
U1
SINGLETB9051FTG_MOTOR_DRIVER
U2
SINGLETB9051FTG_MOTOR_DRIVER
U3
SINGLETB9051FTG_MOTOR_DRIVER
J1
Conn_02x06_Row_Letter_Last
J2
Conn_02x06_Row_Letter_Last
J3
Conn_02x06_Row_Letter_Last
Can be 9V or 5V
M1_1 White
M1_2 Yellow
M1_3 Blue
M1_4 Green
M1_5 Black
M1_6 Red
M2_1 encoder B
M2_2 encoder A
M3_1 encoder B
M3_2 encoder A