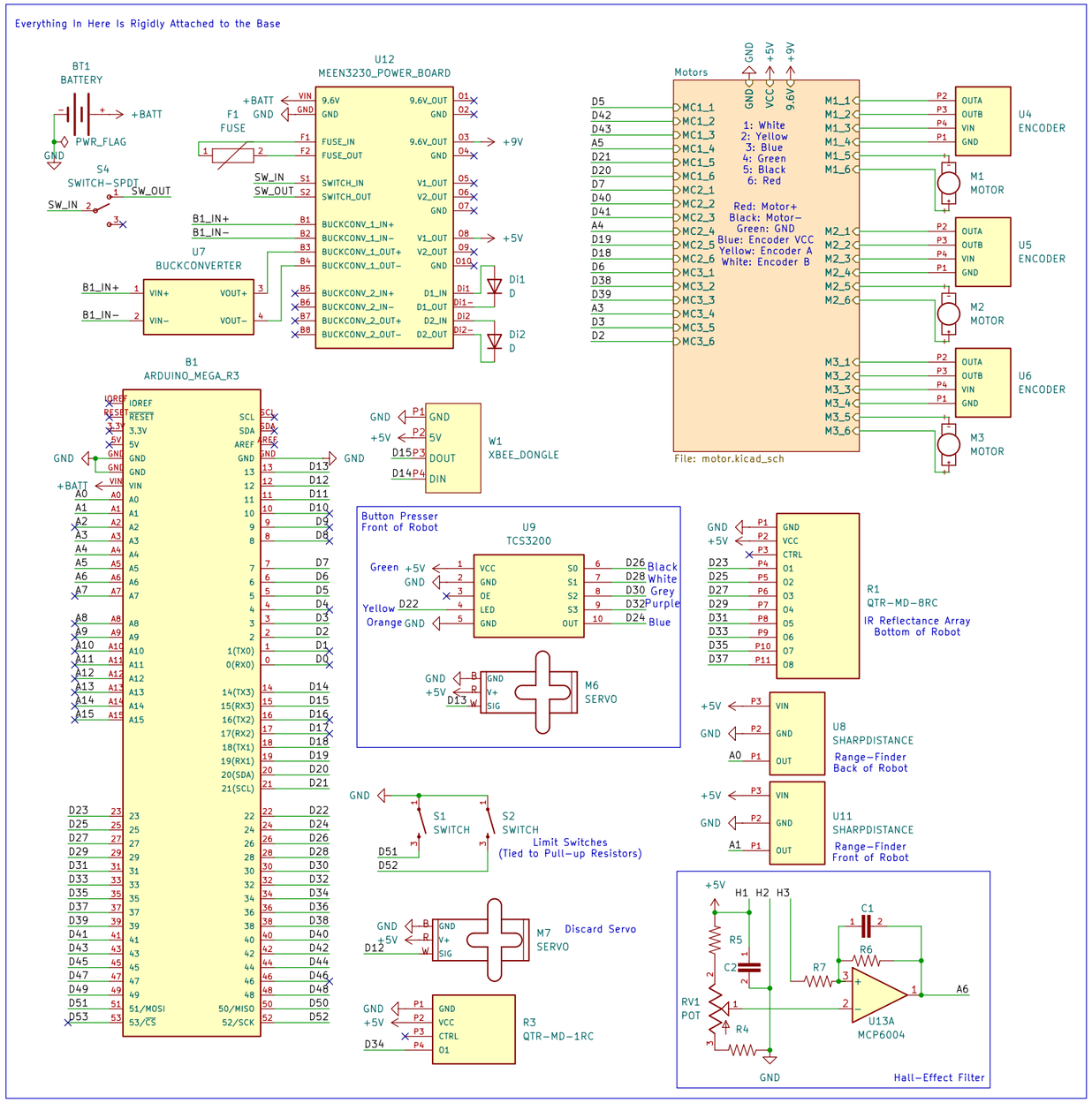
Everything In Here Is Rigidly Attached to the Base
BT1
BATTERY
+BATT
PWR_FLAG
GND
S4
SWITCH-SPDT
SW_OUT
SW_IN
U12
MEEN3230_POWER_BOARD
F1
FUSE
SW_IN
SW_OUT
B1_IN+
B1_IN-
U7
BUCKCONVERTER
VIN+
VIN-
VOUT+
VOUT-
+9V
+5V
Di1
D
Di2
D
B1
ARDUINO_MEGA_R3
W1
XBEE_DONGLE
GND
5V
DOUT
DIN
D15
D14
Motors
File: motor.kicad_sch
1: White
2: Yellow
3: Blue
4: Green
5: Black
6: Red
Red: Motor+
Black: Motor-
Green: GND
Blue: Encoder VCC
Yellow: Encoder A
White: Encoder B
U4
ENCODER
U5
ENCODER
U6
ENCODER
M1
MOTOR
M2
MOTOR
M3
MOTOR
Button Presser
Front of Robot
U9
TCS3200
Green
Yellow
Orange
Black
White
Grey
Purple
Blue
D22
D26
D28
D30
D32
D24
M6
SERVO
R1
QTR-MD-8RC
IR Reflectance Array
Bottom of Robot
U8
SHARPDISTANCE
Range-Finder
Back of Robot
U11
SHARPDISTANCE
Range-Finder
Front of Robot
S1
SWITCH
S2
SWITCH
Limit Switches
(Tied to Pull-up Resistors)
D51
D52
M7
Discard Servo
SERVO
D12
R3
QTR-MD-1RC
D34
H1
H2
H3
C1
C2
R5
R6
R7
R4
RV1
POT
U13A
MCP6004
A6
Hall-Effect Filter

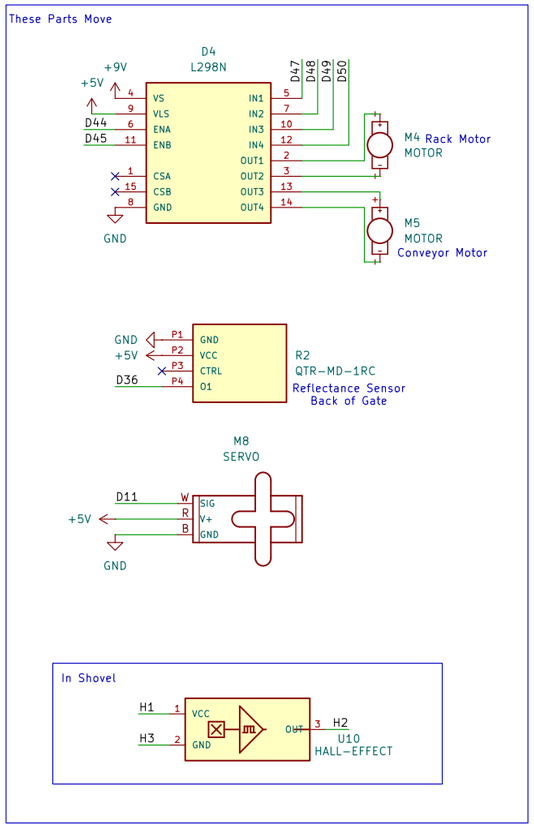
These Parts Move
D4
L298N
+9V
+5V
D44
D45
D47
D48
D49
D50
M4 Rack Motor
MOTOR
M5
MOTOR
Conveyor Motor
R2
QTR-MD-1RC
Reflectance Sensor
Back of Gate
D36
M8
SERVO
D11
In Shovel
H1
H3
H2
U10
HALL-EFFECT

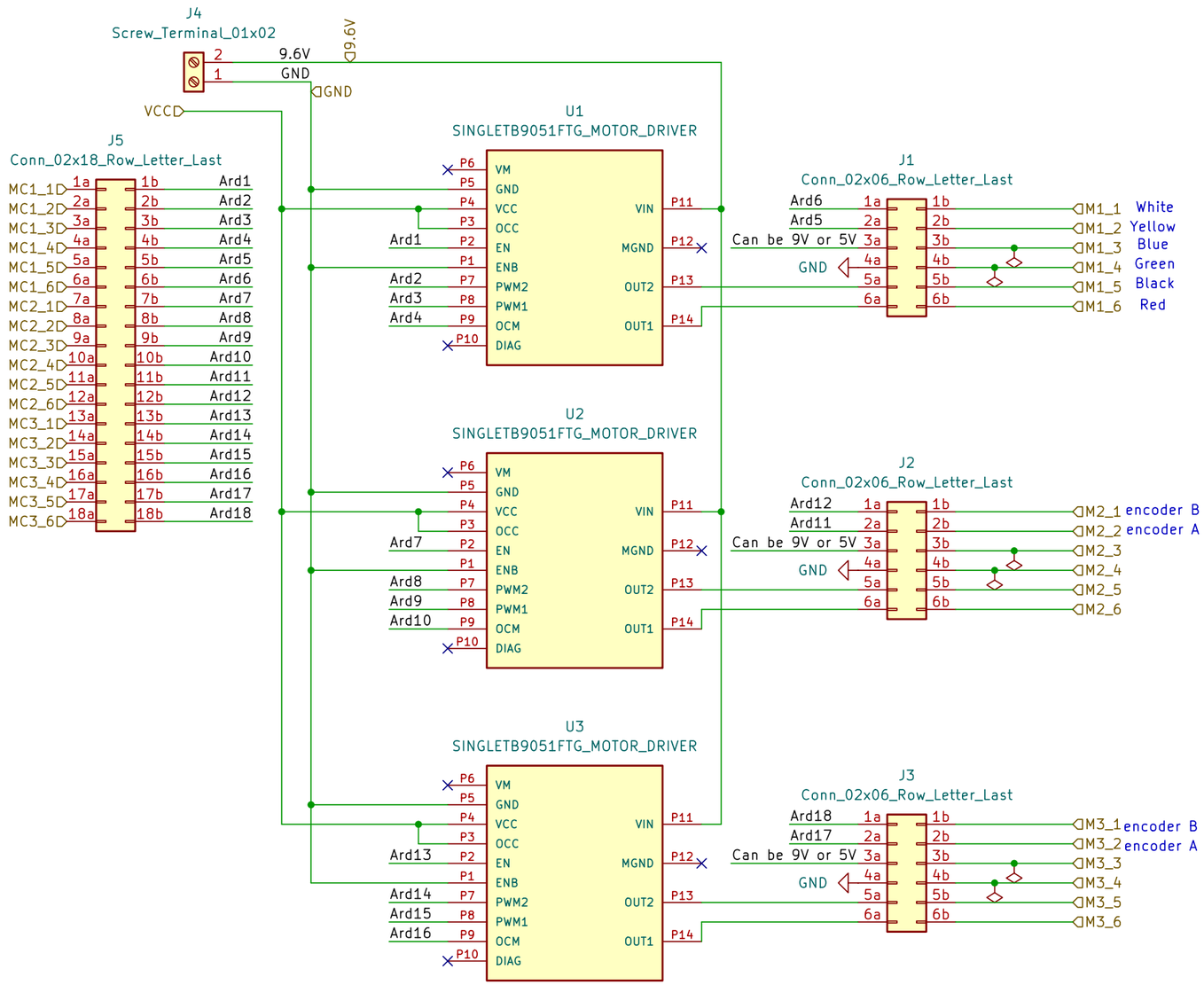
J4
Screw_Terminal_01x02
9.6V
GND
VCC
J5
Conn_02x18_Row_Letter_Last
U1
SINGLETB9051FTG_MOTOR_DRIVER
U2
SINGLETB9051FTG_MOTOR_DRIVER
U3
SINGLETB9051FTG_MOTOR_DRIVER
J1
Conn_02x06_Row_Letter_Last
J2
Conn_02x06_Row_Letter_Last
J3
Conn_02x06_Row_Letter_Last
Can be 9V or 5V
M1_1 White
M1_2 Yellow
M1_3 Blue
M1_4 Green
M1_5 Black
M1_6 Red
M2_1 encoder B
M2_2 encoder A
M3_1 encoder B
M3_2 encoder A