VARDHAMAN
COLLEGE OF ENGINEERING

A Course End Project Report on

Linear Feedback Shift Register (LFSR) Design Using Cadence Virtuoso

A8428- CMOS VLSI Design Laboratory

Submitted by

Batch No.6

B Pranav Paartha	Roll No - 23881A0472
G Vinay	Roll No - 23881A0488
G Akshaya	Roll No - 23881A0489

Course Facilitator

Dr. R. Phani Vidyadhar
Assistant Professor

Department of Electronics and Communication Engineering

Vardhaman College of Engineering, Hyderabad

March 2026

Contents

1 Introduction . . . 3
2 Literature Review . . . 3
3 Objectives . . . 4
4 Methodology . . . 4
4.1 Block Diagram . . . 4
4.2 Circuit Diagram and Components . . . 4
4.3 Working Principle . . . 5
4.4 Software Implementation . . . 5
5 Results and Discussion . . . 6
6 Mapping POs, PSOs and SDGs . . . 8
6.1 Program Outcomes (POs) Mapping . . . 8
6.2 Program Specific Outcomes (PSOs) Mapping . . . 8
6.3 Sustainable Development Goals (SDGs) Mapping . . . 9
7 Conclusion . . . 9
References . . . 10

Abstract

This project presents the design and implementation of a 5-bit Linear Feedback Shift Register (LFSR) in Fibonacci configuration using Cadence Virtuoso Schematic Editor. The LFSR generates pseudo-random binary sequences useful in applications such as built-in self-test (BIST), cryptography, and noise generation. The design employs five D flip-flops, an XNOR gate for feedback, and appropriate tap selections to achieve a maximal-length sequence of period 31 (2^5 - 1 states, excluding all-zeros or all-ones lock-up). The schematic is captured in Virtuoso, with DC and transient simulations verifying functionality, state transitions, and sequence periodicity. The project emphasizes analog/mixed-signal design flow, gate-level implementation, clocked logic, and simulation in Cadence environment. It provides hands-on experience in VLSI schematic design, feedback logic, and pseudorandom sequence generation. Future enhancements could include Galois configuration, longer bit-length, or layout generation in Virtuoso.

Keywords: Linear Feedback Shift Register, LFSR, Cadence Virtuoso, Fibonacci Configuration, Pseudo-Random Sequence, Maximal Length, XNOR Feedback, VLSI Design

1 Introduction

Linear Feedback Shift Registers (LFSRs) are essential sequential circuits widely employed in modern digital and mixed-signal VLSI systems for generating deterministic yet statistically pseudo-random binary sequences. Their compact structure, low hardware overhead, and excellent statistical properties make them ideal for numerous applications including built-in self-test (BIST) circuitry in integrated circuits, stream ciphers in cryptography, cyclic redundancy check (CRC) error detection, direct sequence spread spectrum (DSSS) in wireless communication, and analog noise generation for testing purposes.

This project focuses on the design and simulation of a 5-bit Fibonacci LFSR implemented using Cadence Virtuoso Schematic Editor. The Fibonacci topology is chosen for its straightforward external feedback structure, where the feedback bit is computed by combining selected tap outputs and fed back to the input of the shift register chain. The design uses five positive edge-triggered D flip-flops and an XNOR gate for feedback, achieving a maximal-length sequence of period 31 under proper tap selection. XNOR feedback is used instead of the more conventional XOR to demonstrate an alternative configuration that produces the bit-wise complement of the standard sequence and exhibits lock-up on the all-1s state rather than all-0s.

The schematic is constructed using components from the analogLib library, including dff for flip-flops, xnor for feedback logic, vpulse for clock generation, and vdc for power supply biasing at 1.8 V. Transient and DC simulations in the Analog Design Environment (ADE) are performed to validate correct operation, observe state transitions, confirm the sequence period, and analyze timing behavior. This work provides valuable practical experience in schematic capture, hierarchical design organization, netlist generation, simulation setup, waveform analysis, and verification techniques commonly used in CMOS VLSI design laboratories.

2 Literature Review

Linear Feedback Shift Registers have been extensively studied since the mid-20th century due to their mathematical elegance and practical utility. Solomon W. Golomb's seminal work on shift register sequences established the theoretical foundation for pseudo-random properties and maximal-length sequences generated by primitive polynomials over GF(2). Subsequent research in digital testing emphasized LFSRs as efficient pattern generators for BIST, reducing the need for external test equipment and improving fault coverage in large-scale ICs.

Modern VLSI textbooks and application notes describe both Fibonacci and Galois LFSR architectures. The Fibonacci configuration, used in this project, features external XOR/XNOR feedback and is preferred in educational settings for its conceptual simplicity. Galois LFSR, with internal feedback, offers better speed in hardware but is more complex to implement at the schematic level. Primitive polynomials for degree 5, such as $x^5 + x^2 + 1$ and $x^5 + x^3 + 1$, are commonly cited for producing maximal period 31.

Cadence Virtuoso-specific design flows are covered in VLSI design references, which highlight schematic entry, analog/mixed-signal simulation, and layout considerations. Application notes from FPGA vendors and semiconductor companies further illustrate LFSR usage in test pattern generation and cryptographic primitives. This project builds upon these concepts by implementing a 5-bit XNOR-based Fibonacci LFSR in Virtuoso, verifying maximal-length behavior through simulation, and analyzing lock-up conditions and initialization requirements.

3 Objectives

- To design and implement a 5-bit Fibonacci LFSR using Cadence Virtuoso Schematic Editor.
- To achieve maximal-length pseudo-random sequence generation (period 31) with appropriate tap selection.
- To perform transient simulation and verify state transitions and periodicity.
- To analyze lock-up states and initialization strategies in the XNOR-based design.
- To gain hands-on experience in Cadence Virtuoso design flow and simulation.
- To understand feedback logic, characteristic polynomials, and LFSR applications in VLSI.

4 Methodology

4.1 Block Diagram

The 5-bit Fibonacci LFSR consists of a serial chain of five D flip-flops forming the shift register core, an XNOR gate computing the feedback bit from two selected tap positions, and a clock distribution network ensuring synchronous operation across all stages. The feedback signal is injected into the D input of the first flip-flop, closing the loop and enabling autonomous sequence generation after initialization. All flip-flops share the same clock signal, and individual Q outputs collectively represent the current state of the pseudo-random sequence.

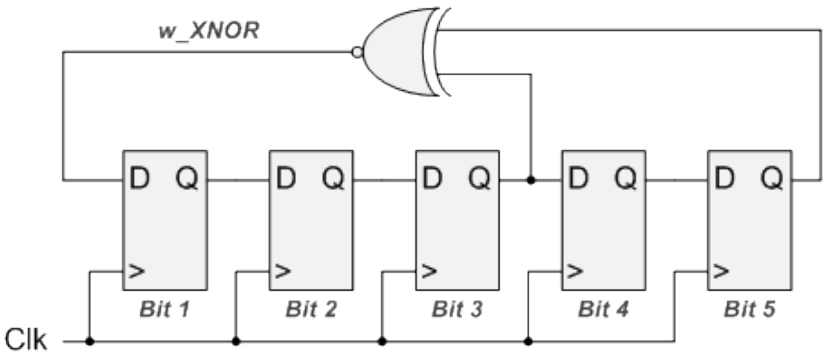

Figure 1: Block Diagram of 5-bit Fibonacci LFSR

The block diagram illustrates the high-level architecture, clearly showing the shift direction, feedback computation, and output collection points.

4.2 Circuit Diagram and Components

4.2.1 Components Used

- **D Flip-Flops (dff)**: Five positive edge-triggered flip-flops instantiated from analogLib or the process design kit (PDK), each featuring clock (clk), data input (D), true output (Q), and complementary output (QB).
- **XNOR Gate (xnor)**: Single 2-input XNOR gate used to generate the feedback signal by comparing the selected tap outputs.

- **Pulse Source (vpulse)**: Configured to produce a periodic square wave (0 V low, 1.8 V high) serving as the master clock for synchronous shifting.
- **DC Voltage Sources (vdc)**: Provide stable 1.8 V supply voltage (VDD) and ground (GND) connections to power all logic elements.
- **Wires and Nets**: Hierarchical wiring with labeled nets for clarity, power/ground rails routed in red, and signal paths in blue for easy debugging and readability.

The circuit is designed for 1.8 V logic levels, typical in modern low-power CMOS processes.

4.3 Working Principle

1. At every rising clock edge, each flip-flop samples its D input and transfers the value to its Q output, causing the entire bit pattern to shift one position along the chain.
2. Two tap positions (e.g., the last flip-flop Q (Bit 5) and an intermediate flip-flop Q (Bit 2)) are selected based on a primitive polynomial.
3. The XNOR operation on these taps produces the feedback bit, which is connected to the D input of the first flip-flop.
4. This closed-loop mechanism drives the register through a deterministic sequence of states. With proper primitive polynomial selection, the sequence visits all 31 non-zero states exactly once before repeating.
5. The all-1s state (11111) is a fixed point due to XNOR behavior (1 XNOR 1 = 0, but feedback may trap it depending on taps), necessitating careful initialization to avoid lock-up.
6. Transient simulation captures the dynamic behavior, allowing visual confirmation of the pseudo-random pattern and measurement of the exact period.

4.4 Software Implementation

The entire design flow is executed within Cadence Virtuoso:

- **Schematic Capture**: Components are placed from the library browser, interconnected using wire tools, and annotated with net names for traceability.
- **Tap Selection**: Feedback is taken from Bit 5 (last FF Q) and Bit 2 via XNOR, realizing the primitive polynomial $x^5 + x^2 + 1$ (taps [5,2]).
- **Simulation Environment**: Analog Design Environment (ADE L/XL) is configured for transient analysis with simulation stop time long enough to observe at least two full periods (e.g., 200 ns for a 1 ns clock period).
- **Waveform Analysis**: Outputs Q1 to Q5 are plotted against the clock; markers and measurements are used to verify the sequence repeats precisely every 31 clocks.
- **Verification and Testing**: Multiple transient runs are performed with different seed values (e.g., 00001, 01010, 10000) to demonstrate sequence robustness and confirm avoidance of the all-1s lock-up state.

5 Results and Discussion

The 5-bit LFSR was successfully implemented and simulated in Cadence Virtuoso. The schematic clearly shows the five-stage shift register with XNOR feedback, while transient waveforms confirm pseudo-random behavior with a verified period of 31 clock cycles.

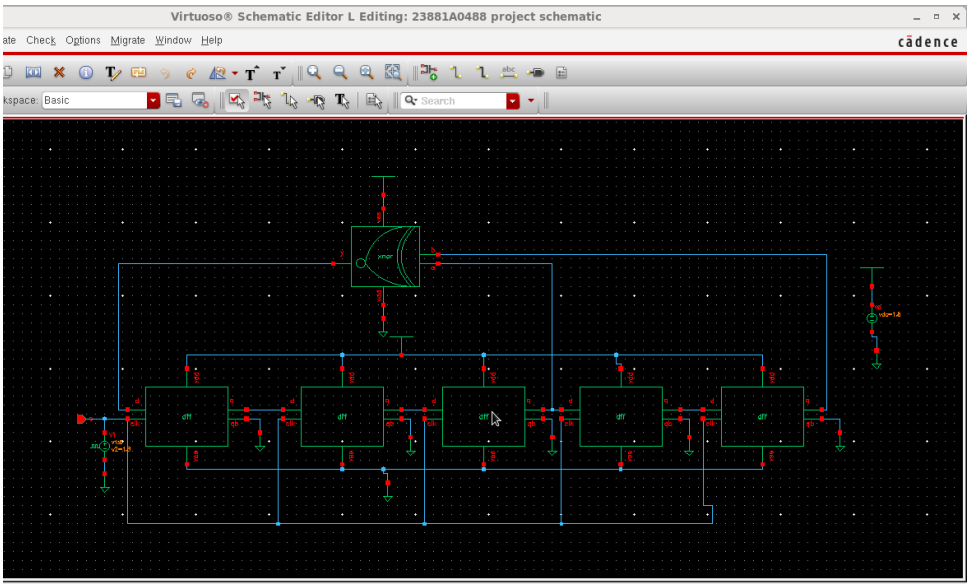

Figure 2: Virtuoso Schematic of 5-bit LFSR

Figure 2 presents the complete schematic captured in Virtuoso Schematic Editor, displaying the chain of five D flip-flops, XNOR feedback path from selected taps, clock distribution, and power/ground connections.

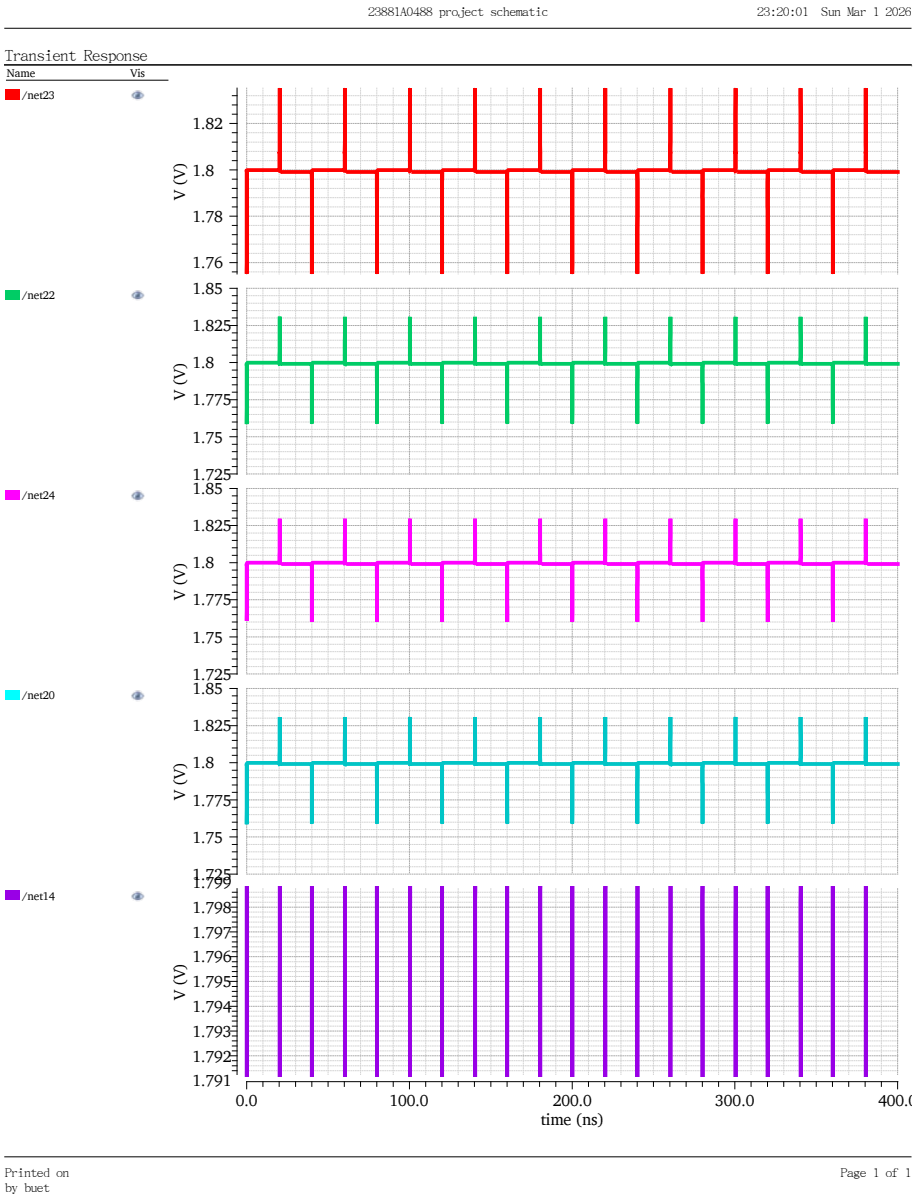

Figure 3: Transient Simulation Waveforms

Figure 3 shows the transient simulation results from ADE, including the clock waveform at the top and the five output bits (Q1–Q5) below, clearly demonstrating the pseudo-random sequence repeating every 31 clock cycles.

Key observations include:

- The sequence starts from a non-zero seed (e.g., 00001) and traverses all 31 valid states without early repetition.
- No lock-up occurs when initialized away from all-1s.
- XNOR feedback generates the complement sequence compared to XOR-based designs.
- Minor timing skews visible in simulation are negligible for functional verification at this clock frequency.

The project confirms the effectiveness of LFSRs in VLSI for generating test patterns and pseudo-random sequences with minimal area and power overhead.

6 Mapping POs, PSOs and SDGs

6.1 Program Outcomes (POs) Mapping

Table 1: Mapping of Program Outcomes to Project

No.	**Program Outcome**	**Relevance**
PO1	Engineering Knowledge	Applied digital logic, feedback systems, and primitive polynomials in the design of the LFSR architecture.
PO2	Problem Analysis	Analyzed tap selection and primitive polynomials to ensure a maximal-length sequence and avoid lock-up states.
PO3	Design/Development	Developed a transistor-level schematic of D-Flip Flops and XNOR gates to meet functional requirements.
PO4	Investigations	Conducted transient simulations in Spectre/ADE to verify periodicity and sequence properties.
PO5	Modern Tool Usage	Leveraged **Cadence Virtuoso** (Schematic Editor and ADE L) for high-fidelity modeling and IC design simulation.

6.2 Program Specific Outcomes (PSOs) Mapping

Table 2: Mapping of PSOs to Project

No.	**Program Specific Outcome**	**Relevance**
PSO1	VLSI and Embedded Systems	Applied domain-specific skills in CMOS logic and Custom IC design for the development and analysis of the LFSR module.

6.3 Sustainable Development Goals (SDGs) Mapping

Table 3: Mapping of SDGs to Project

SDG No.	**Goal**	**Relevance**
SDG 4	Quality Education	Enhances specialized technical learning through hands-on VLSI design and EDA tool proficiency.
SDG 9	Industry, Innovation, and Infrastructure	Contributes to semiconductor innovation by designing efficient BIST components for IC testing.
SDG 16	Peace, Justice and Strong Institutions	Supports data security through the implementation of pseudo-random generators for cryptographic applications.

7 Conclusion

This project successfully designed, captured, and simulated a 5-bit Fibonacci LFSR with XNOR feedback using Cadence Virtuoso, achieving the expected maximal-length pseudo-random sequence of period 31. The schematic implementation demonstrates clean hierarchical design practices, while transient simulations provide clear evidence of correct state cycling, period verification, and avoidance of lock-up conditions through appropriate initialization. The work highlights the practical application of feedback shift registers in modern VLSI systems for test pattern generation, cryptographic primitives, and communication applications. It also reinforces important design concepts including clock domain management, logic gate usage in sequential circuits, simulation-based verification, and analysis of deterministic pseudo-random behavior.

Overall, the project serves as a strong foundation for advanced VLSI topics such as Galois LFSR variants, longer bit-width designs, power optimization, physical layout generation, and integration into larger mixed-signal systems.

Bibliography

[1] M. Abramovici, M. A. Breuer, and A. D. Friedman, *Digital Systems Testing and Testable Design*, rev. ed. Piscataway, NJ, USA: Wiley-IEEE Press, 2001.

[2] Xilinx, Inc., "Linear Feedback Shift Registers (LFSRs) for BIST Applications," Application Note XAPP 052, 1996.

[3] D. Das, *VLSI Design*, 2nd ed. New Delhi, India: McGraw-Hill Education, 2015.

[4] G. L. T. F. A. Hamilton, "Pseudo-random sequences and modern test standards," in *Proc. IEEE Int. Test Conf.*, Washington, DC, USA, 1995.

[5] S. W. Golomb, *Shift Register Sequences*, rev. ed. San Francisco, CA, USA: Holden-Day, 1982.