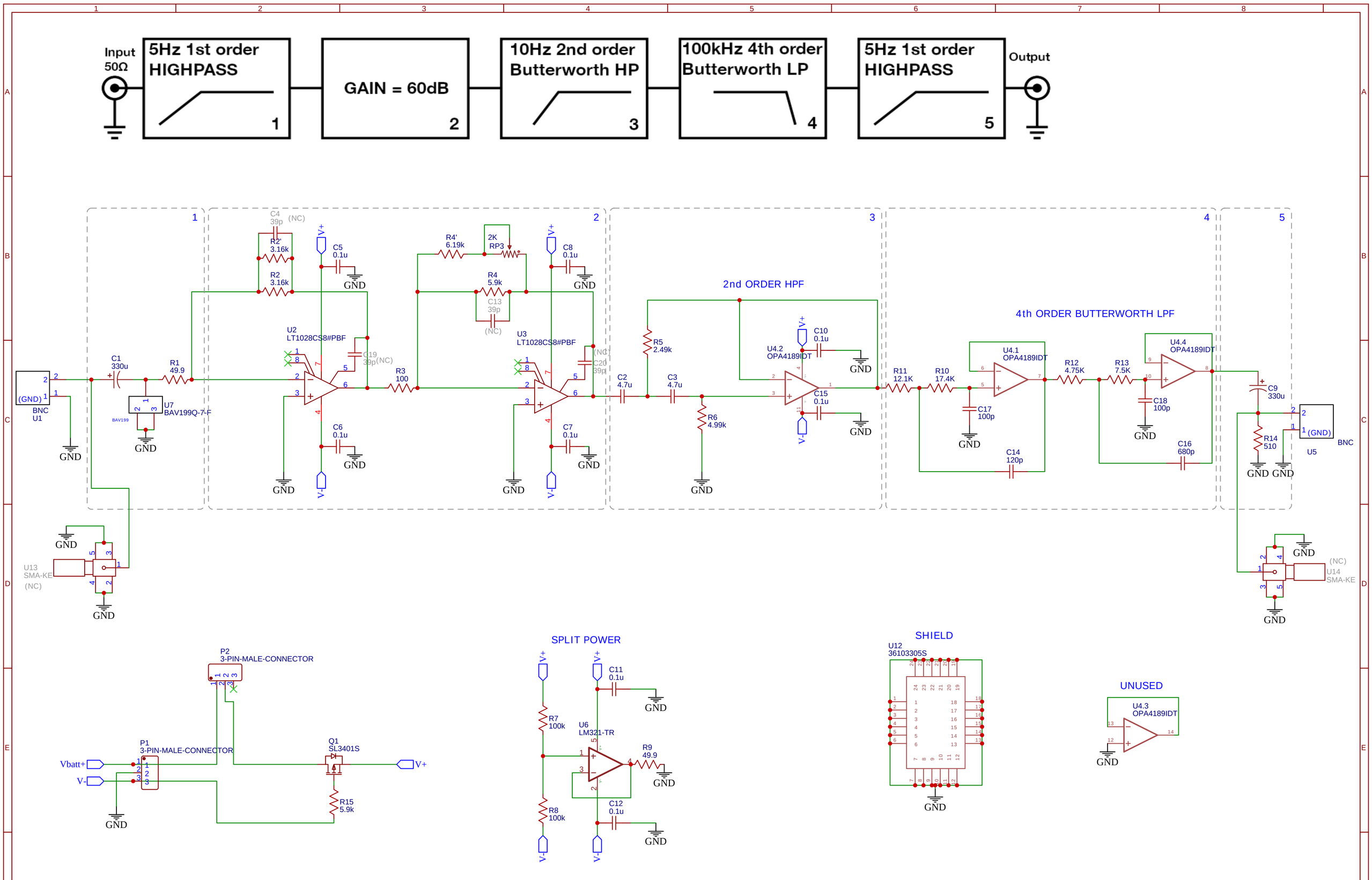

TITLE: 10Hz-100kHz Low Noise Amplifier (LT AN-83)	REV: 1.0
EasyEDA	Company: Your Company
	Sheet: 1/1
	Date: 2025-03-07 Drawn By: vinay.shanbhag