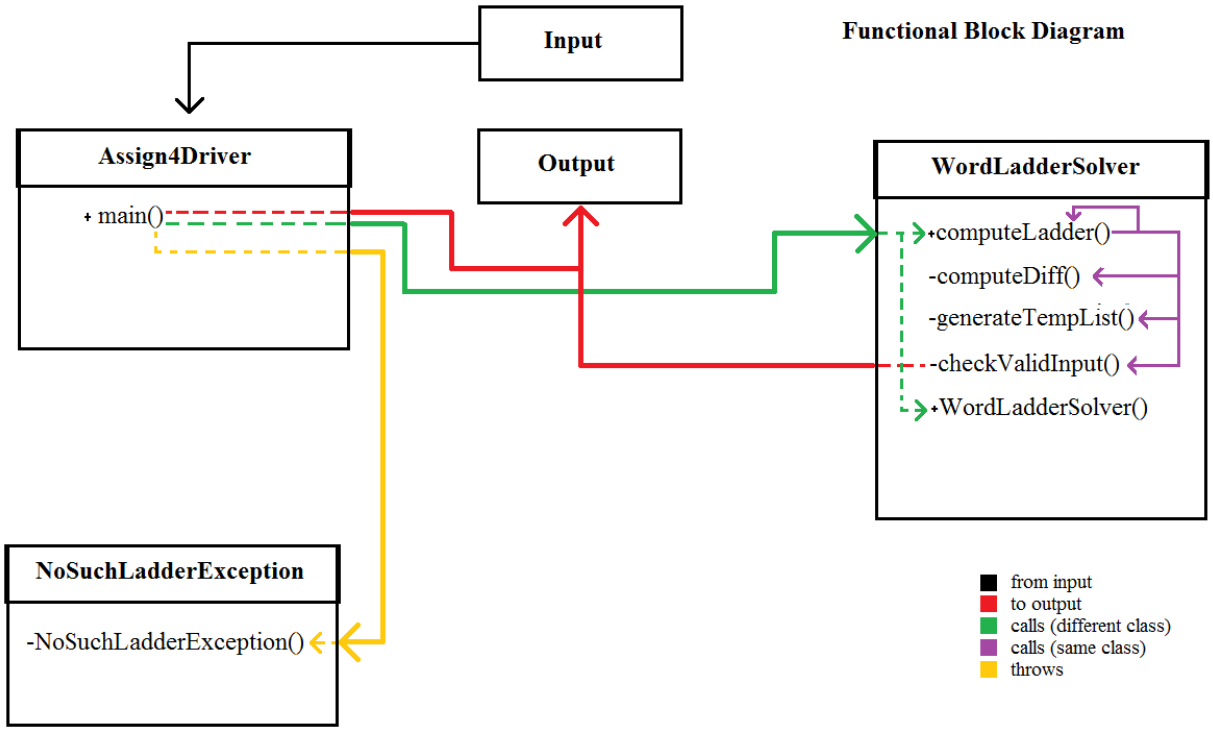
Functional Block Diagram
Input
Output
Assign4Driver
+ main()
WordLadderSolver
+computeLadder()
-computeDiff()
-generateTempList()
-checkValidInput()
+WordLadderSolver()
NoSuchLadderException
-NoSuchLadderException()
from input
to output
calls (different class)
calls (same class)
throws