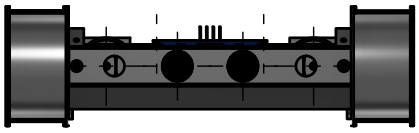

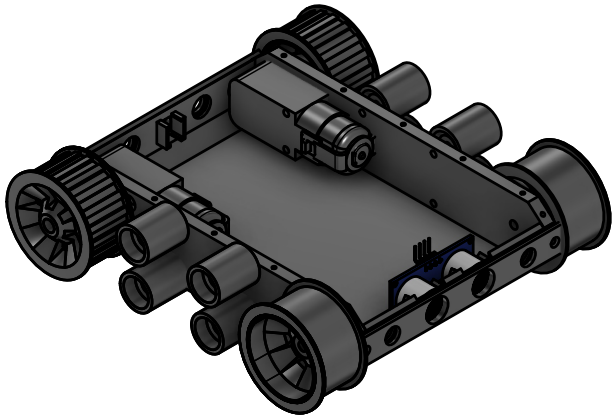

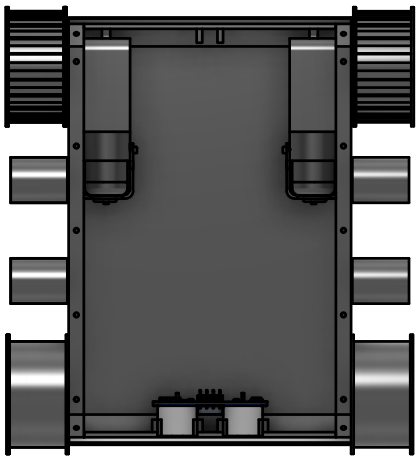

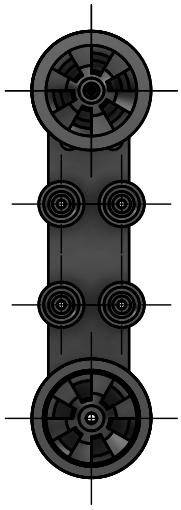

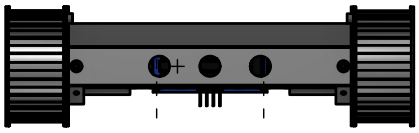

Dept.	Technical reference	Created by Vinh Thanh 3/24/2026	Approved by
		Document type	Document status
		Title assembly_tank	DWG No.
			Rev. / Date of issue / Sheet 1/1