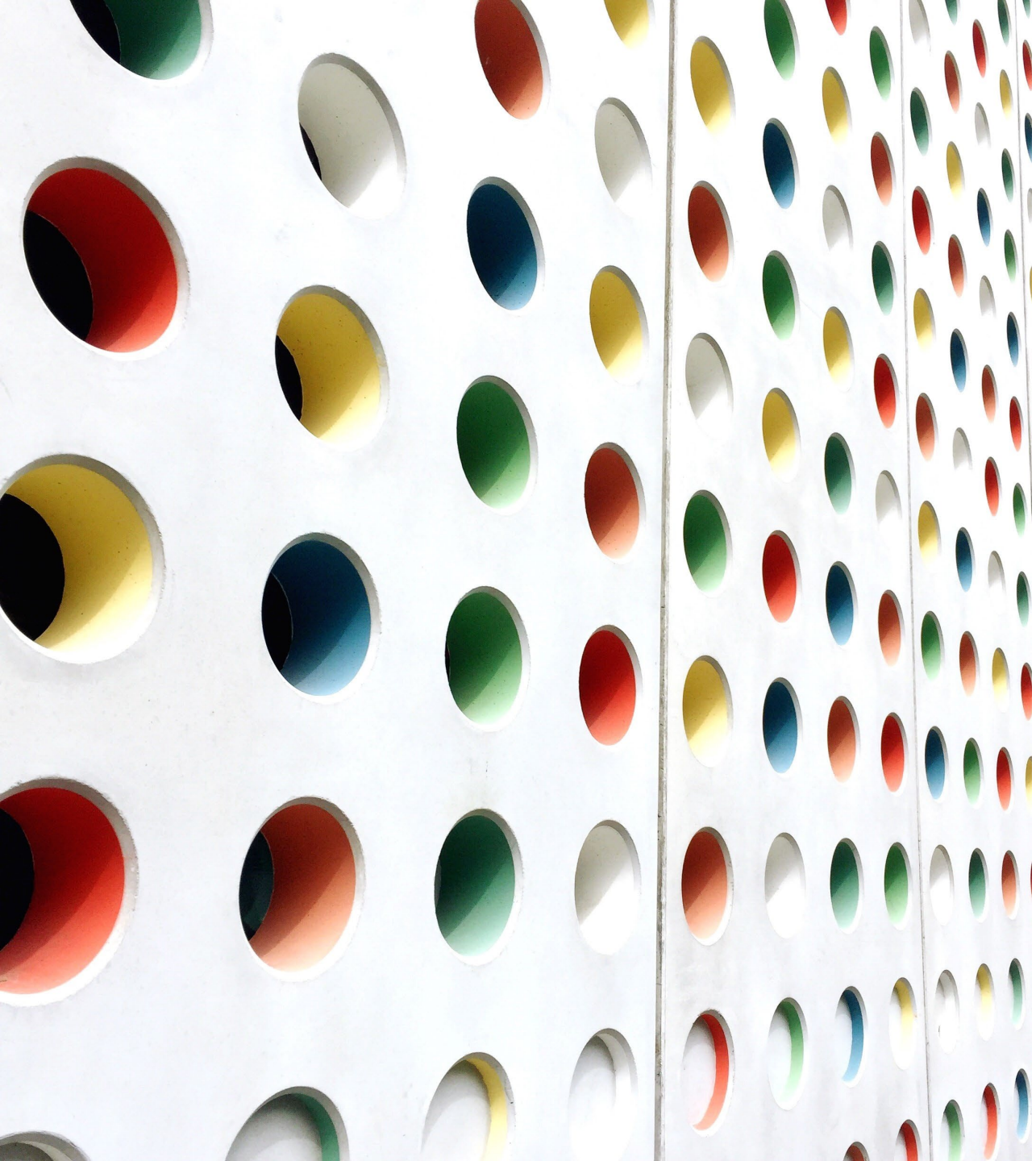

LOW NETWORK AREA

RATION DISTRIBUTION SYSTEM

Team Members

20BEC0302	AKSHAVI RAJ
20BEC0337	SANSKRITI SHAW
20BEC0523	ADITYA VIKRAM SINGH
20BEC0534	YASH DILIP HATWAR
20BEC0723	ARYAN SHARMA
20BEC0780	VINYAS A. SHETTY

Abstract

In areas with limited network access, ensuring equitable ration distribution is vital for marginalized communities. Traditional methods often lead to operational challenges and resource wastage. This paper explores the ESP32-RFID Based Ration Distribution System, a solution that enhances accountability and precision. This technology streamlines ration distribution and offers real-time monitoring for administrators while ensuring beneficiaries can access their provisions easily. The system leverages RFID technology for secure, contactless authentication. By addressing operational challenges and resource wastage, it represents a promising solution for efficient ration distribution, particularly in low connectivity areas.

Introduction

In terms of cutting-edge technologically driven solutions, the ESP32-RFID Based Ration Distribution System represents a substantial advancement that addresses one of the most important societal needs: food security. Assuring an equal distribution of vital resources, particularly food, is still a crucial concern in a world experiencing many difficulties. The distribution of rationed food items is streamlined and improved by this cutting-edge system, which makes use of Radio-Frequency Identification (RFID) and ESP32 microcontroller technology. Systems for distributing rations have played a crucial role in helping marginalised groups especially living in Low Network areas. The conventional approaches used in such systems, however, frequently experience operational inefficiencies, 24*7 network availability and mistakes, resulting in unequal distribution and resource wastage. By incorporating cutting-edge technology, the ESP32-RFID Based Ration delivery System tackles these problems head-on and develops a reliable, effective, and open food delivery system. This approach guarantees accountability and accuracy while also streamlining the entire ration distribution procedure. It gives managers access to real-time data for monitoring and optimisation while letting beneficiaries easily obtain their allotted portions. In light of changing health and safety concerns, the ESP32 microcontroller's RFID technology provides secure and contactless authentication, making it an appropriate and timely solution. The ESP32-RFID Based Ration Distribution System's architecture, features, and advantages will be covered in more detail in the sections that follow. We'll show how it can revolutionise the way food resources are distributed and, ultimately, improve the lives of those who rely on it.

Observation from Literature Surveys

Aadhar Card Authentication:

- Some systems propose the use of Aadhar cards for unique authentication. GSM technology is employed to communicate the authentication process, allowing individuals access to ration materials and maintaining a record of the distribution process.

IoT-Enabled Smart Ration Systems:

- IoT integration is emphasized in smart ration systems, combining RFID, biometrics, and communication technologies. These systems provide authorized access, real-time updates, and efficient communication. Cloud dashboards facilitate monitoring and offer potential to transform ration distribution for disadvantaged populations.

Triple-Layered Security Measures:

- Automated ration shops implement triple-layered security measures, combining RFID-equipped smart cards, RFID-enabled containers, and a GSM module for efficient communication. This ensures accurate distribution and enhances security at ration shops.

Hardware and Software Components:

- Some proposed systems rely on a combination of hardware components like RFID modules, GSM modules, and microcontrollers, along with software functionalities such as RFID card scanning, user authentication, OTP verification, and automated ration dispensing.

Observation from Literature Surveys

Integration for Enhanced Security:

- Several systems combine RFID and GSM technologies to enhance user and product identification, ensuring secure transaction alerts. The incorporation of tampering and fire detection sensors bolsters safety during distribution.

Ration Distribution Optimization:

- RFID is utilized in ration distribution systems for storing customer data and serving as a ration card. GSM facilitates communication with government databases, providing real-time updates to customers. These systems aim to streamline processes, reduce queues, and combat inefficiencies and corruption in Public Distribution Systems (PDS).

Cloud Computing for Data Storage:

- Cloud computing is employed in some systems as a storage database, using JSON format for efficient data organization. This approach simplifies data management and retrieval, especially in scenarios where large datasets need to be stored and accessed.

Mobile App Integration:

- Modernization of ration distribution includes the integration of mobile apps, RFID cards, and biometrics. This not only reduces queues and wait times but also ensures centralized beneficiary data and transaction handling, enhancing overall efficiency.

Proposed System Block Diagram

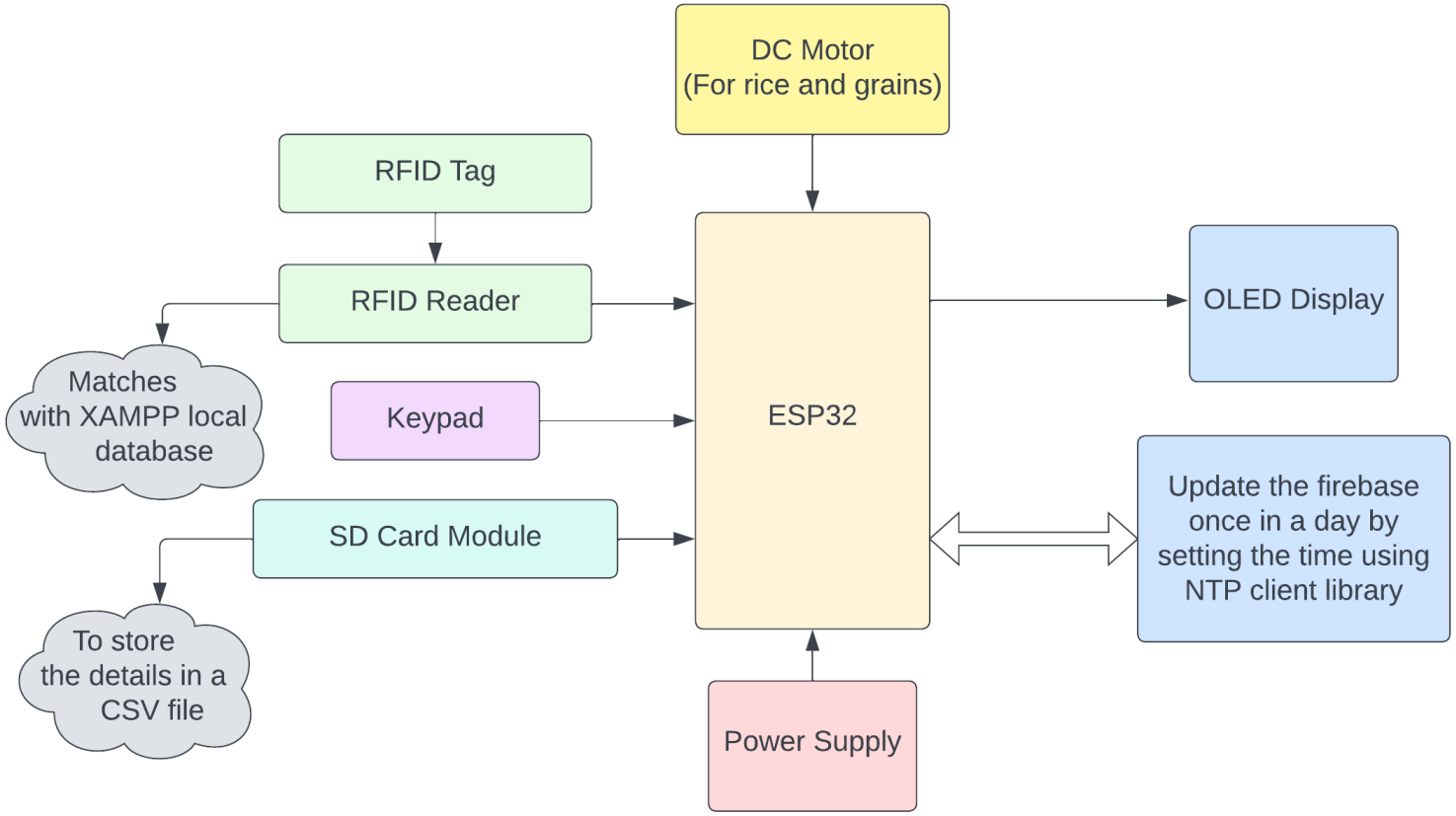

Algorithm & Working

The proposed system on the basis of Ration Distribution for Low Network Areas. At the core of the system lies the ESP32 microcontroller. The RFID is the first step of this system. RFID Card acts as a ration card. RFID card number detected through the RFID Module is compared with the details in the XAMPP Local Database. RFID scanner identifies the card holder name and ration detail of the card holder. If the Ration card gets validated, the Ration automatically gets issued by means of the Motor, as it rotates on successful RFID Validation. Name of the card holder and ration detail will be displayed in the LCD display. On Duplicate Entry, the RFID won't get scanned and will provide an error stating that the ID has already been issued. The data of issue gets stored into the CSV file via SD Card which stores data and gets updated on the centralized database once the internet connection is established. The proposed system prevents corruption in Ration Distribution due to transparency from Government to the end consumer and promotes effective governance. The proposed approach and system is cost effective, time saving and compact in size. The main scope of this project is providing service in Low-Network Area where corruption is high and chances of getting accurate data is less due to large human interventions as well as manual processes. The system brings transparency in Ration Distribution from Top to Bottom i.e., Government to the needy.

Hardware Setup

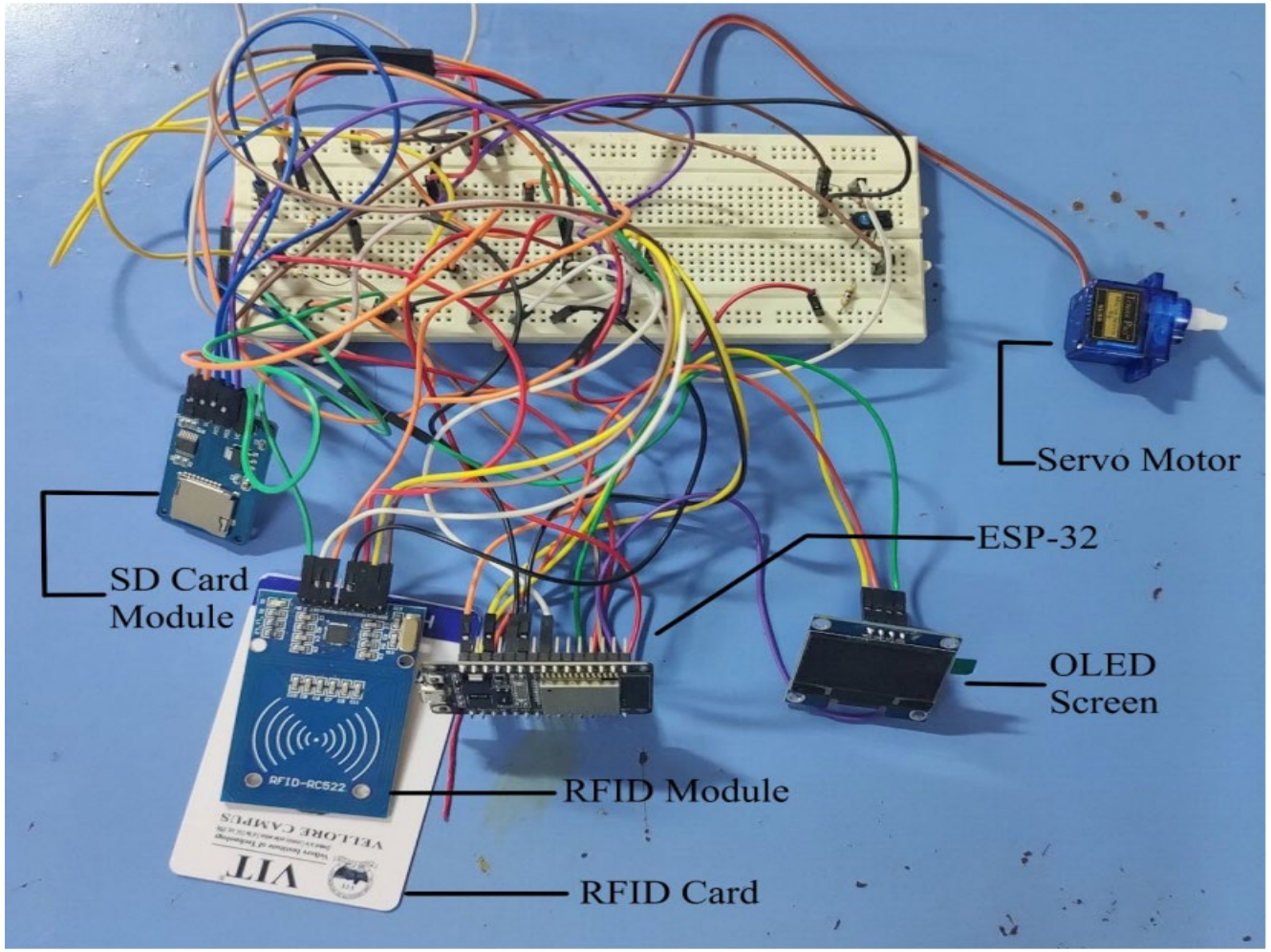

Output

```
22:41:09.939 -> Connecting to WiFi...
22:41:09.939 -> Successfully connected to : Vini
22:41:09.939 -> IP address: 192.168.182.145
22:41:09.939 -> Connected to WiFi
22:41:09.939 -> Please tag a card or keychain to see the UID
22:41:09.986 ->
22:41:12.700 -> PICC type: MIFARE 1KB
22:41:12.700 -> THE UID OF THE SCANNED CARD IS : 477B7576
22:41:13.678 -> 200
22:41:13.678 ->
22:41:14.660 -> A new card has been detected.
22:41:14.660 -> The NUID tag is:
22:41:14.660 -> In hex:  47 7B 75 76
22:41:16.154 -> Card number sent to Firebase successfully
```

Fig. 4. Serial Monitor

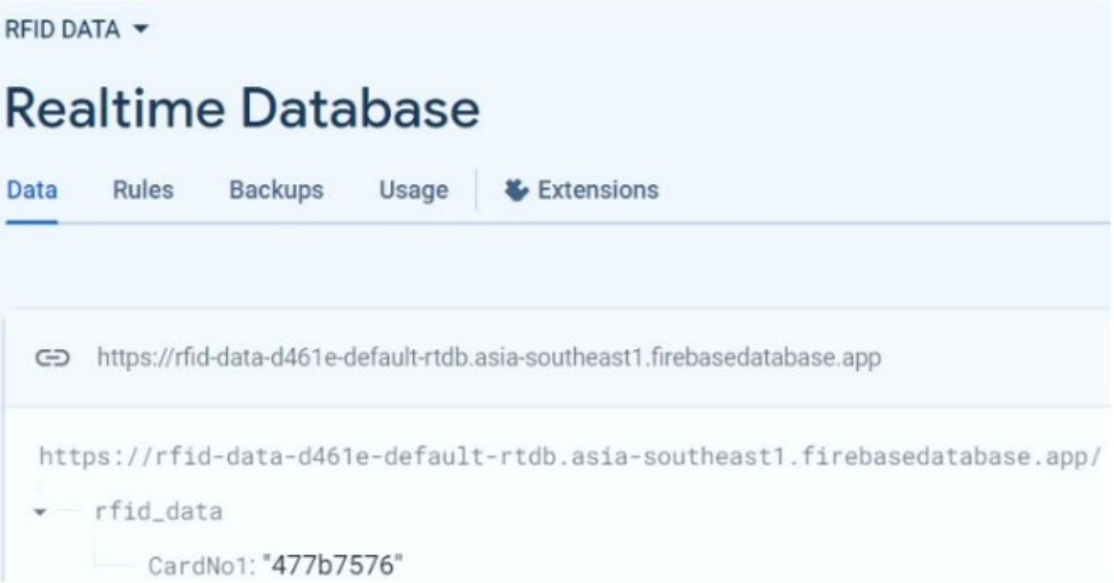

Output

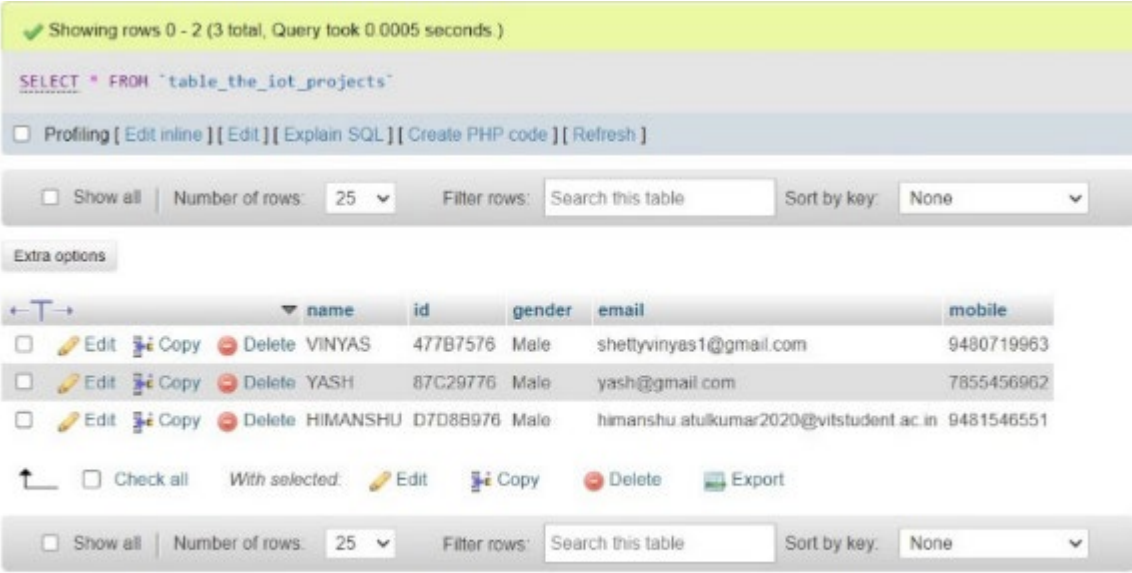

Fig. 6. XAMPP Local Database

Conclusion

The ESP32-RFID Based Ration Distribution System is a cutting-edge solution that addresses the challenges of ration distribution in low network areas. By incorporating RFID technology, the system ensures secure and contactless authentication, promoting transparency and accountability in the distribution process. It streamlines the distribution procedure, providing real-time data for monitoring and optimization, while also improving the lives of those who rely on it. The system offers a cost-effective, time-saving, and compact solution to enhance the efficiency and effectiveness of ration distribution.