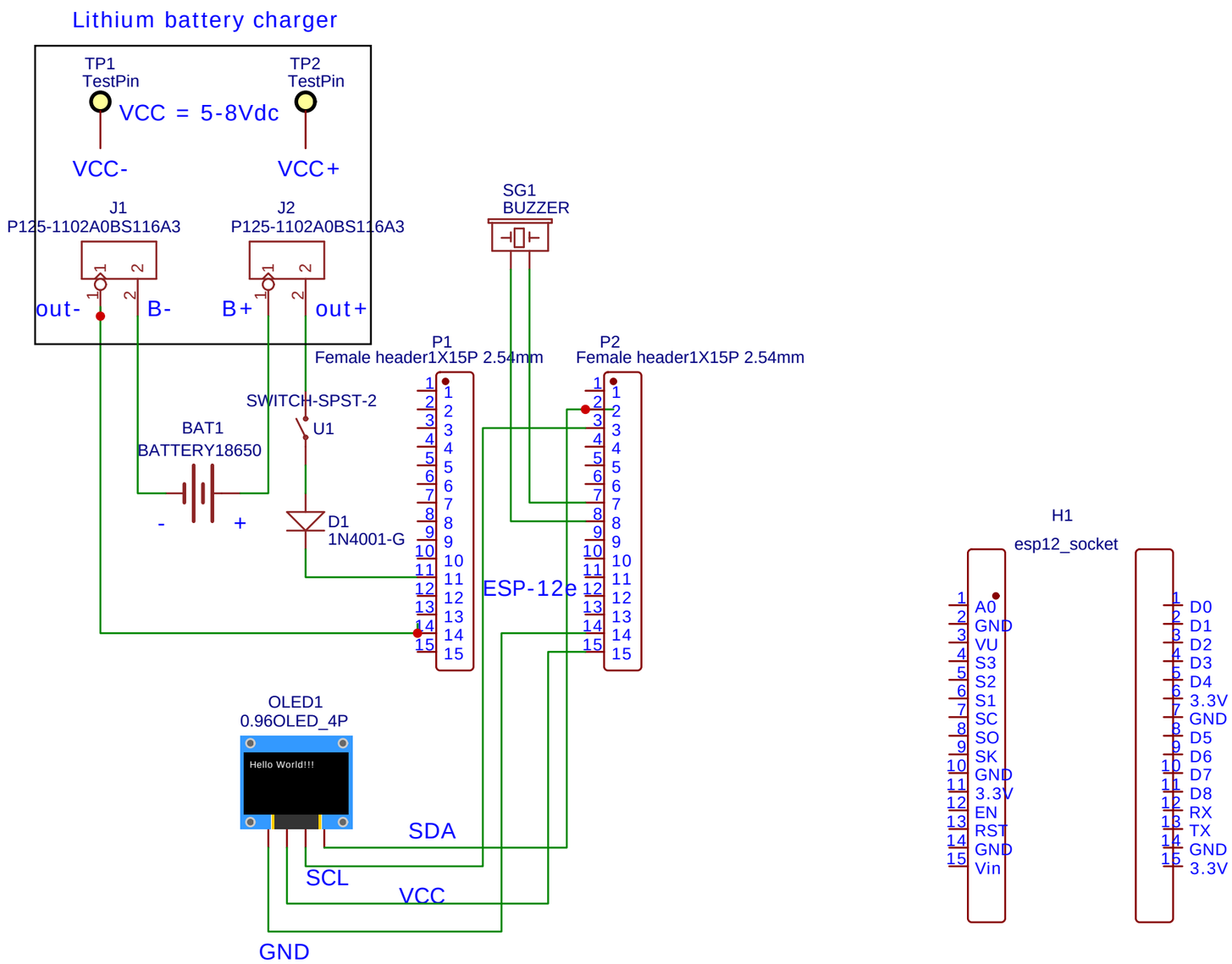

TITLE: ESP12 Morse Keyer		REV: 1.0
EasyEDA	Company: Vincenzo Lorenzale	Sheet: 1/1
	Date: 2021-08-25 Drawn By: vinloren	