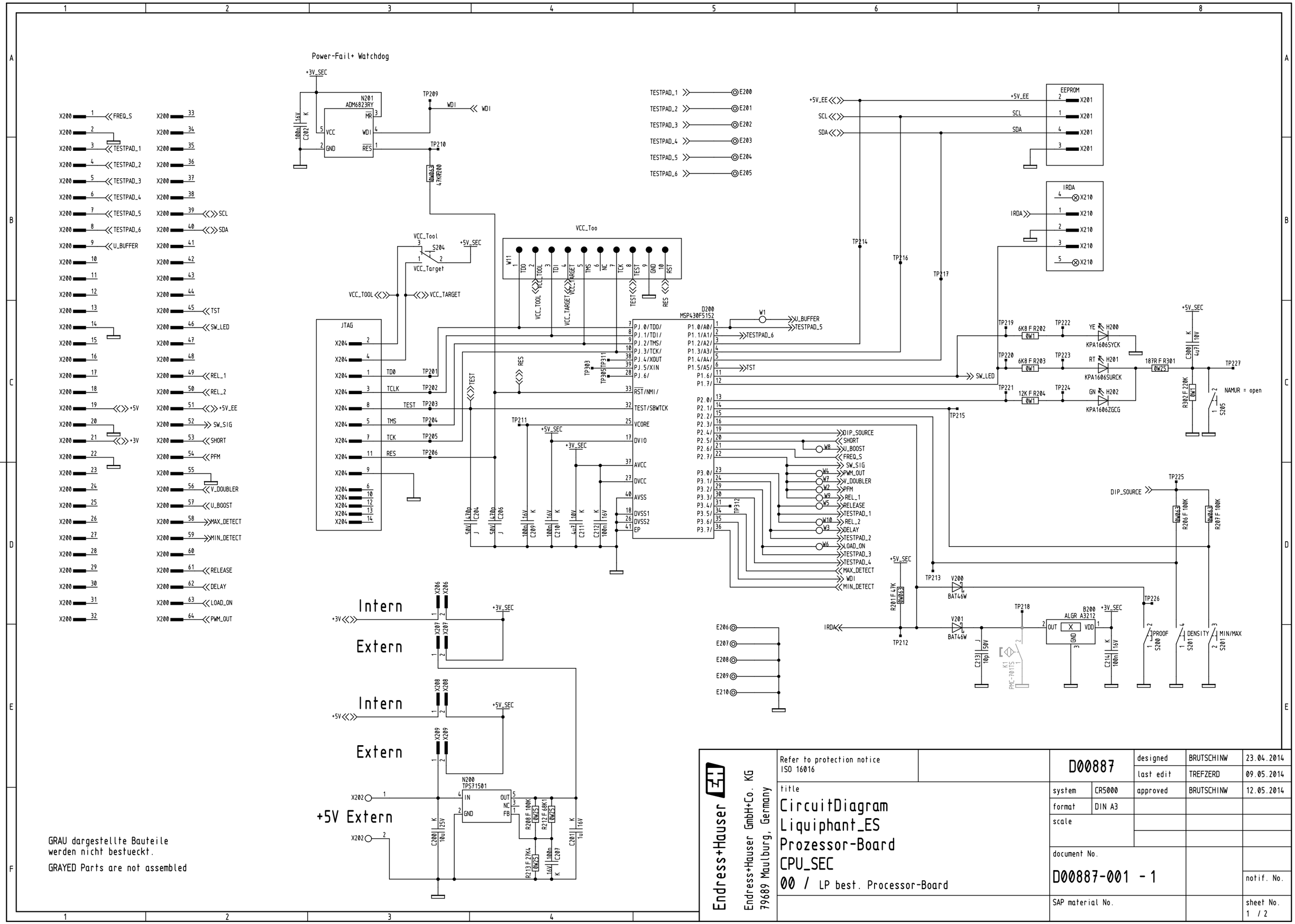

Endress+Hauser

Endress+Hauser GmbH+Co. KG
79689 Maulburg, Germany

Refer to protection notice
ISO 16016

title
CircuitDiagram
Liquiphant_ES
Prozessor-Board
CPU_SEC
00 / LP best. Processor-Board

D00887		designed	BRUTSCHINW	23.04.2014
		last edit	TREFZERD	09.05.2014
system	CR5000	approved	BRUTSCHINW	12.05.2014
format	DIN A3			
scale				
document No.				
D00887-001 - 1				notif. No.
SAP material No.				sheet No. 1 / 2

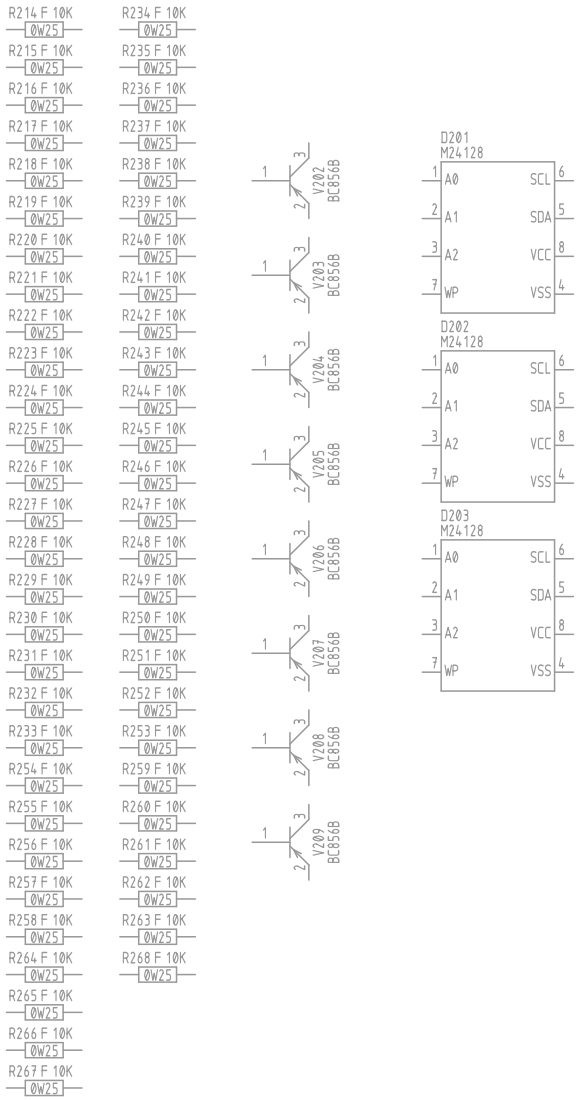

Endress+Hauser

Endress+Hauser GmbH+Co. KG
79689 Maulburg, Germany

Refer to protection notice
ISO 16016

title
CircuitDiagram
Liquiphant_ES
Prozessor-Board
@Sheet
00 / LP best. Processor-Board

D00887		designed	BRUTSCHINW	23.04.2014
		last edit	TREFZERD	09.05.2014
system	CR5000	approved	BRUTSCHINW	12.05.2014
format	DIN A4			
scale				
document No.				
D00887-001 - 1				notif. No.
SAP material No.				sheet No. 2 / 2