PES UNIVERSITY

Department of Computer Science & Engineering

100 Feet Ring Road, BSK III Stage, Bangalore – 560085

MPCA PROJECT REPORT

Microprocessors and Computer Architecture (MPCA)

Smart Plant Monitoring System

Using Arduino Uno , DHT11, Soil Moisture Sensor, LDR, 5V Relay Module and DC Water Pump

Sl. No	Name	SRN
1	Vinodkumar L	PES1UG25AM817
2	Pavan D C	PES1UG24AM383
3	R Hemanth Reddy	PES1UG24AM390

Academic Year: 2025–2026 | Semester: IV | Section: G

1. Project Overview

Attribute	Details
Project Title	Smart Plant Monitoring System
Domain	IoT / Embedded Systems / Computer Architecture
Microcontroller	Arduino Uno
Platform	Arduino IDE
Language	C++ (Arduino Framework)
Polling Interval	10 seconds
Control Modes	Automatic (sensor-driven) — Pump & LED control

2. Objective

To design and implement an automated smart plant monitoring system using the Arduino Uno microcontroller that continuously monitors soil moisture, ambient light, temperature, and humidity — and intelligently controls a water pump and LED indicator based on sensor readings.

The project demonstrates core MPCA concepts including analog-to-digital conversion (ADC), memory-mapped I/O, digital I/O, relay-controlled switching, and polling-based sensor reading loops.

3. Components Used

3.1 Microcontroller

Component	Specification	Purpose
Arduino Uno	ATmega328P, 16MHz	Main controller — brain of the project

3.2 Sensors

Sensor	Spec	Arduino Pin	Purpose
DHT11	3.3V–5V, ±2°C	D2	Temperature & humidity sensing
Soil Moisture Sensor	5V, Analog out	A0	Detects water level in soil
LDR (Photoresistor)	With 10kΩ divider	A1	Detects ambient light intensity

3.3 Actuators & Indicators

Component	Spec	Arduino Pin	Purpose
5V Relay Module (1-Ch)	5V coil, 10A contacts	D7	Switches water pump ON/OFF
DC Water Pump / Motor	5V DC	via Relay COM	Pumps water to the plants
LED (5mm) + 220Ω	3.3–5V	D13	Indicates system / light status

3.4 Passive Components & Wiring

Component	Purpose
Resistor 220Ω ×1	Protects LED from excess current
Resistor 10kΩ ×1	Voltage divider for LDR circuit
USB Cable (Type-B) ×1	Provides power and uploads code to Arduino
Breadboard (Half-size) ×1	Easy circuit prototyping and connections
Jumper Wires (~20)	Connects all components together

4. Pin Mapping Summary

#	Module / Component	Arduino Pin	I/O Type
1	DHT11 Sensor	D2	Digital Input (1-Wire)
2	Soil Moisture Sensor Module	A0	Analog Input (ADC)
3	LDR (via Voltage Divider)	A1	Analog Input (ADC)
4	5V Relay Module	D7	Digital Output — controls pump
5	LED + 220Ω Resistor	D13	Digital Output — status indicator
6	DC Water Pump (+)	Relay COM	Pump positive via relay
7	DC Water Pump (–)	External GND	Pump ground to supply GND
8	External Power Supply	5V to Arduino & Pump	Powers Arduino and pump

5. System Architecture & Working Principle

5.1 Overall Architecture

The system is organized into three functional layers:

5.2 Input Layer (Sensors)

- Soil Moisture Sensor (A0) — Reads an analog voltage proportional to soil conductivity. Higher values indicate drier soil. Threshold: 500 (ADC count).
- LDR Sensor (A1) — Measures ambient light intensity through a 10kΩ voltage divider. Darker conditions produce lower ADC readings. Threshold: 500.
- DHT11 Sensor (D2) — Provides digital temperature (°C) and relative humidity (%) readings via the 1-Wire protocol.

5.3 Processing Layer

- Arduino Uno R3 runs the main polling loop every 10 seconds using delay(10000).
- Reads all sensor values (analogRead for soil/LDR; DHT library for temperature/humidity).
- Applies threshold logic to decide pump and LED state independently.
- Prints all readings to the Serial Monitor at 9600 baud for real-time debugging.

5.4 Output Layer

- 5V Relay Module (D7) — Relay is active-LOW. Pulling D7 LOW activates the relay coil and switches the water pump ON. Writing HIGH turns the pump OFF.
- LED (D13) — Turns ON in dark conditions (ldrValue < 500) to provide supplemental monochromatic light for the plant.

5.5 MPCA Concepts Demonstrated

MPCA Concept	Application in Project
Analog-to-Digital Conversion (ADC)	Soil moisture and LDR signals converted via analogRead() on A0, A1
Memory-Mapped I/O	GPIO registers accessed via Arduino's pinMode/digitalWrite abstractions
Digital I/O	DHT11 1-Wire protocol on D2; Relay control on D7; LED on D13
Relay-Controlled Switching	Arduino cannot source motor current — relay acts as electrical switch
Polling Loop	10-second sensor read cycle in loop() — contrasts with interrupt-driven I/O
Serial Communication (UART)	Sensor data logged to PC via Serial.print() at 9600 baud

5.6 Circuit diagram

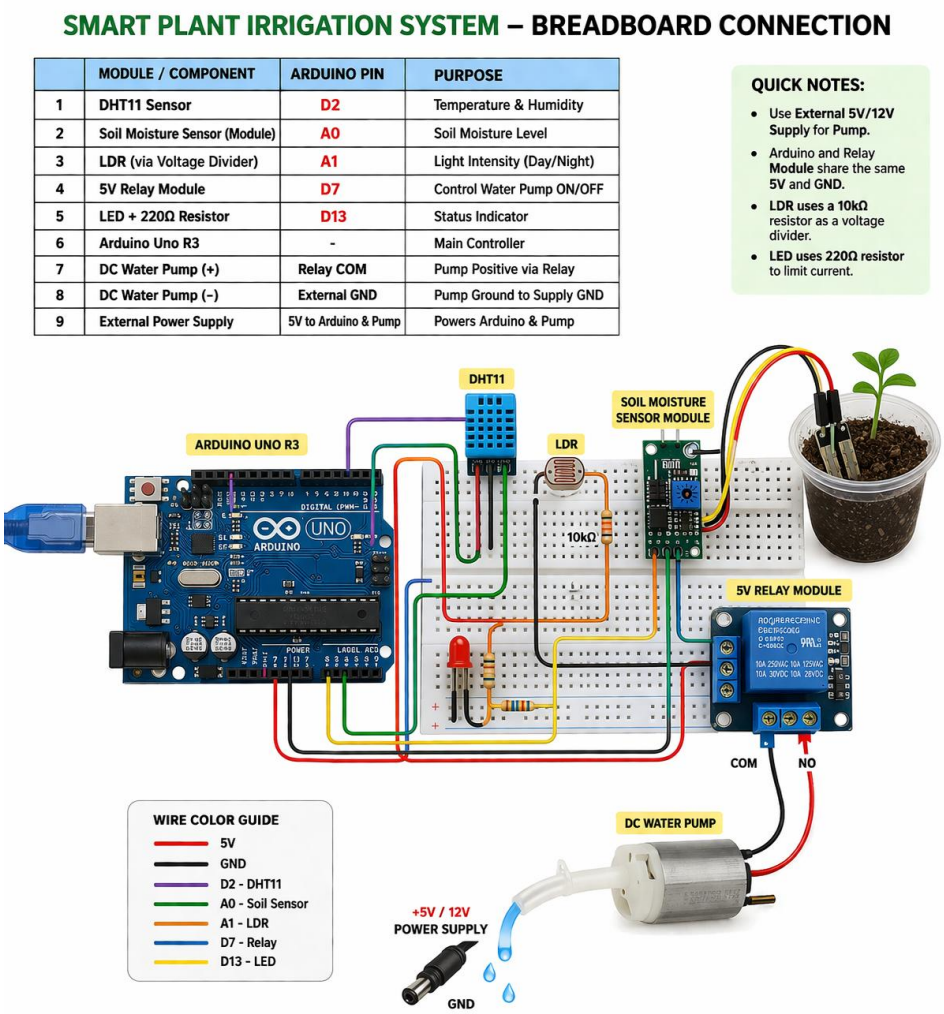

	MODULE / COMPONENT	ARDUINO PIN	PURPOSE
1	DHT11 Sensor	D2	Temperature & Humidity
2	Soil Moisture Sensor (Module)	A0	Soil Moisture Level
3	LDR (via Voltage Divider)	A1	Light Intensity (Day/Night)
4	5V Relay Module	D7	Control Water Pump ON/OFF
5	LED + 220Ω Resistor	D13	Status Indicator
6	Arduino Uno R3	-	Main Controller
7	DC Water Pump (+)	Relay COM	Pump Positive via Relay
8	DC Water Pump (–)	External GND	Pump Ground to Supply GND
9	External Power Supply	5V to Arduino & Pump	Powers Arduino & Pump

PIN CONFIGURATION:

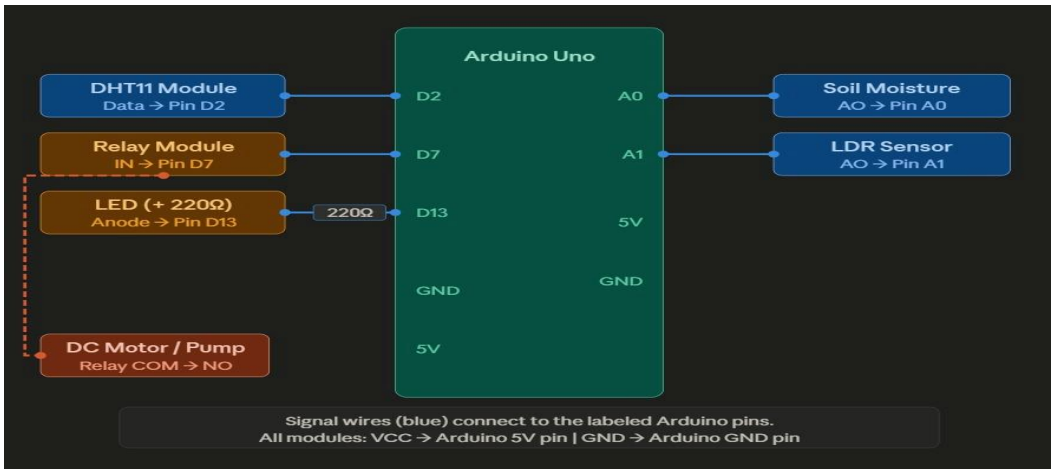

6. Pseudocode

6.1 Setup

```
BEGIN SETUP
   Initialize Serial at 9600 baud
   Set RELAY_PIN (D7) as OUTPUT, write HIGH   // motor OFF on startup
   Set LED_PIN (D13) as OUTPUT
   Initialize DHT11 sensor on DHTPIN (D2)
END SETUP
```

6.2 Main Loop (runs every 10 seconds)

```
BEGIN LOOP
   soilValue    <- analogRead(A0)
   ldrValue     <- analogRead(A1)
   humidity     <- DHT11.readHumidity()
   temperature  <- DHT11.readTemperature()

   PRINT soilValue, ldrValue, temperature, humidity to Serial

   // Motor / Pump Control
   IF soilValue > 500 THEN
      RELAY_PIN = LOW         // Motor ON (Dry Soil)
      PRINT 'Motor ON (Dry Soil)'
   ELSE
      RELAY_PIN = HIGH        // Motor OFF (Wet Soil)
      PRINT 'Motor OFF (Wet Soil)'
   END IF

   // LED / Light Control
   IF ldrValue < 500 THEN
      LED_PIN = HIGH          // LED ON (Dark)
      PRINT 'Light ON (Dark)'
   ELSE
      LED_PIN = LOW           // LED OFF (Bright)
      PRINT 'Light OFF (Bright)'
   END IF

   PRINT '================================'
   WAIT 10000 ms
END LOOP
END
```

7. Output & Observations

7.1 Serial Monitor Output — Scenario Breakdown

The Arduino outputs sensor values to the Serial Monitor at 9600 baud every 10 seconds. The following scenarios were observed during testing:

Scenario	Soil Value	LDR Value	Pump	LED
Dry soil + Dark	888–902 (>500)	93–190 (<500)	ON	ON
Wet soil + Dark	395–405 (<500)	205–230 (<500)	OFF	ON
Dry soil + Bright	>500	>500	ON	OFF
Wet soil + Bright	<500	>500	OFF	OFF

7.2 Sample Serial Monitor and Hardware module Output

```
Output    Serial Monitor ×
Message (Enter to send message to 'Arduino UNO' on 'COM9')
==================================
Soil: 888 | LDR: 93 | Temp: 33.80°C | Hum: 31.00%
Motor ON (Dry Soil)
Light ON (Dark)
==================================
Soil: 891 | LDR: 180 | Temp: 33.80°C | Hum: 31.00%
Motor ON (Dry Soil)
Light ON (Dark)
==================================
Soil: 902 | LDR: 190 | Temp: 33.80°C | Hum: 31.00%
Motor ON (Dry Soil)
Light ON (Dark)
==================================
Soil: 395 | LDR: 205 | Temp: 33.80°C | Hum: 31.00%
Motor OFF (Wet Soil)
Light ON (Dark)
==================================
```

7.3 LDR Sensitivity Note

During hardware testing, the LDR showed low sensitivity at normal indoor lighting levels — standard room lighting was perceived as 'dark' (ldrValue < 500), and a phone flashlight was required to register 'bright' conditions. This is expected behavior for the basic LDR voltage-divider circuit and can be corrected by tuning the threshold value or replacing the 10kΩ resistor with a variable resistor for calibration.

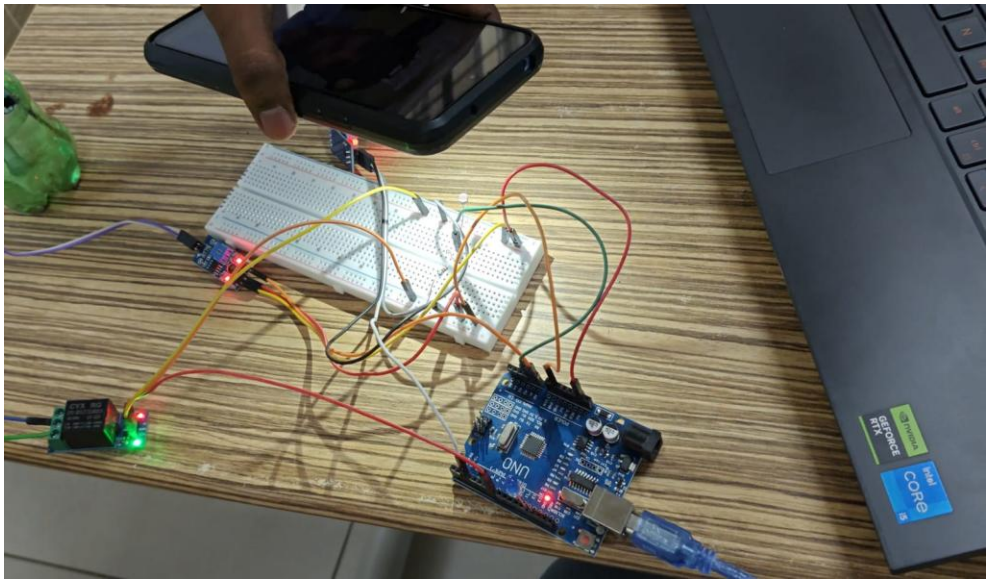

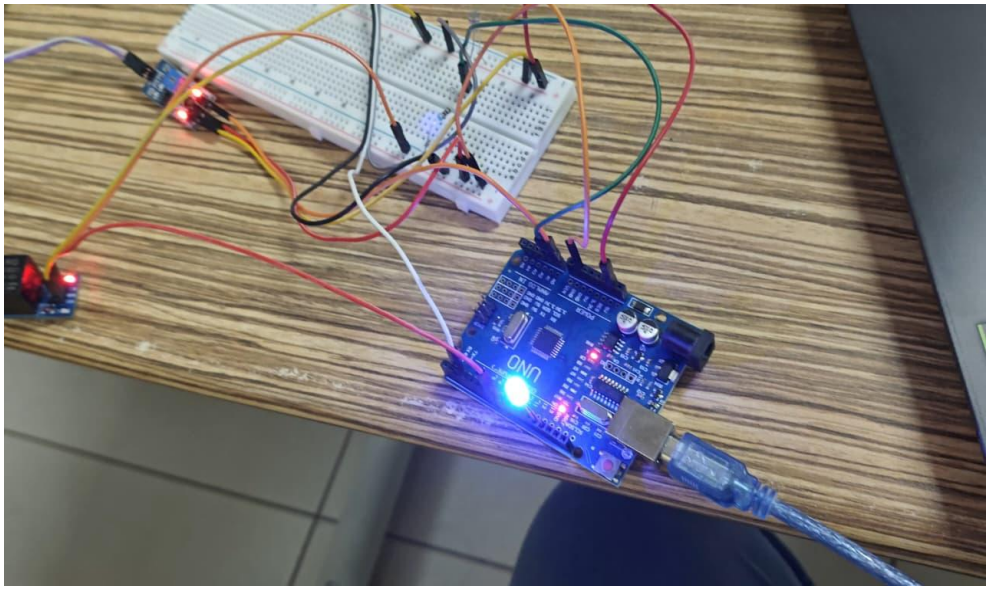

8. Test Results

Test Case	Expected Result	Status
Soil dry (value > 500)	Pump activates via relay	Pass ✓
Soil wet (value < 500)	Pump turns OFF	Pass ✓
Dark environment (LDR < 500)	LED turns ON	Pass ✓
Bright environment (LDR > 500)	LED turns OFF	Pass ✓
DHT11 reading	Temp/humidity on Serial Monitor	Pass ✓
System power-up	Relay initializes HIGH (pump OFF)	Pass ✓
10s polling interval	Sensor reads every 10 seconds	Pass ✓

9. Conclusion

The Smart Plant Monitoring System was successfully designed, implemented, and tested on the Arduino Uno R3. The project achieved its core objective of automating basic plant care through sensor-driven decision making — without requiring any manual intervention.

The system effectively demonstrated key MPCA concepts: analog-to-digital conversion via the soil moisture and LDR sensors, digital I/O for relay and LED control, 1-Wire serial communication with the DHT11, relay-based high-current switching, and a polling-based sensor read loop. All test cases passed, and the system responded correctly to both dry/wet soil transitions and light intensity changes.

.

10. References

1. Microchip Technology, ATmega328P Datasheet, Rev. 7810D, 2015.
2. Arduino LLC, Arduino IDE Reference Manual, https://www.arduino.cc/reference, 2024.
3. Adafruit Industries, DHT Sensor Library Documentation, GitHub, 2023.