US011274950B2

(12) **United States Patent**
Dardona et al.

(10) **Patent No.: US 11,274,950 B2**
(45) **Date of Patent: Mar. 15, 2022**

(54) **FABRICATION OF HIGH DENSITY SENSOR ARRAY**

(71) Applicant: **United Technologies Corporation**, Farmington, CT (US)

(72) Inventors: **Sameh Dardona**, South Windsor, CT (US); **Callum Bailey**, Glastonbury, CT (US)

(73) Assignee: **UNITED TECHNOLOGIES CORPORATION**, Farmington, CT (US)

(*) Notice: Subject to any disclaimer, the term of this patent is extended or adjusted under 35 U.S.C. 154(b) by 286 days.

(21) Appl. No.: **16/443,056**

(22) Filed: **Jun. 17, 2019**

(65) **Prior Publication Data**

US 2020/0393274 A1 Dec. 17, 2020

(51) **Int. Cl.**
G01D 21/02 (2006.01)
G01B 7/16 (2006.01)
(Continued)

(52) **U.S. Cl.**
CPC ***G01D 21/02*** (2013.01); ***G01B 7/16*** (2013.01); ***G01K 7/16*** (2013.01); ***G01L 1/16*** (2013.01); ***G01P 15/0802*** (2013.01)

(58) **Field of Classification Search**
CPC G06F 3/0445; G06F 3/044; G01D 21/02; G01B 7/16; G01K 7/16; G01L 1/16; G01P 15/0802
(Continued)

(56) **References Cited**

U.S. PATENT DOCUMENTS

3,762,953 A 10/1973 Barnowski et al.
10,012,552 B2 7/2018 Batzinger et al.
(Continued)

FOREIGN PATENT DOCUMENTS

EP 3184180 A1 6/2017
EP 3431712 A1 1/2019
WO 2016100218 A1 6/2016

OTHER PUBLICATIONS

Extended European Search Report dated Oct. 15, 2020, received for corresponding European Application No. 20178476.6, six pages.
(Continued)

Primary Examiner — Octavia Hollington
(74) *Attorney, Agent, or Firm* — Kinney & Lange, P.A.

(57) **ABSTRACT**

A sensor array having a lattice topology includes interconnects having an electrically-conductive layer sandwiched between two dielectric layers, the interconnects defining first-axis interconnects, second-axis interconnects, and interconnect junctions, sensor nodes located on associated interconnect junctions thereby defining an associated first-axis line and second-axis line, a sensor on an associated sensor node, a primary first-axis interconnect interface that is electrically connected to the first-axis interconnects, and a primary second-axis interconnect interface that is electrically connected to the second-axis interconnects. Each sensor node includes a first electrode that is electrically connected to an associated first-axis line, a second electrode that is electrically connected to an associated second-axis line, and a bypass bridge that electrically isolates the associated second-axis line from the associated first-axis line.

19 Claims, 7 Drawing Sheets

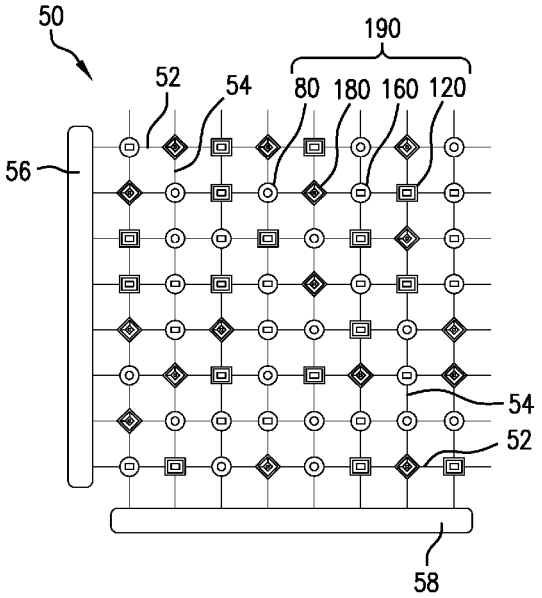

(51) **Int. Cl.**
G01K 7/16 (2006.01)
G01L 1/16 (2006.01)
G01P 15/08 (2006.01)

(58) **Field of Classification Search**
USPC 73/514.34
See application file for complete search history.

(56) **References Cited**

U.S. PATENT DOCUMENTS

10,867,914	B2 *	12/2020	Dardona	H05K 1/0283
10,903,415	B2 *	1/2021	Dardona	H01L 27/20
2001/0030324	A1 *	10/2001	Morikawa	H01L 27/14692 257/59
2005/0019589	A1	1/2005	Wiedemann et al.	
2006/0254366	A1 *	11/2006	Williamson	G01L 1/22 73/786
2011/0118990	A1	5/2011	Sidhu et al.	
2012/0190989	A1 *	7/2012	Kaiser	A61B 5/0031 600/476
2016/0290880	A1	10/2016	Lewis et al.	
2017/0106585	A1	4/2017	Nino et al.	
2017/0213648	A1	7/2017	Joyce et al.	
2017/0228070	A1 *	8/2017	Roberts	G06F 3/0443
2017/0305301	A1	10/2017	McMillen et al.	
2017/0325724	A1	11/2017	Wang et al.	
2018/0175158	A1	6/2018	Rogers et al.	

OTHER PUBLICATIONS

Jason Trelewicz, Ph.D., MesoPlasma Direct Write Fabrication of Conformal, Harsh Environment Sensors,Passive Wireless Sensor Tag Workshop, Jul. 27-28, 2011, Houston, TX, 20 pages.

* cited by examiner

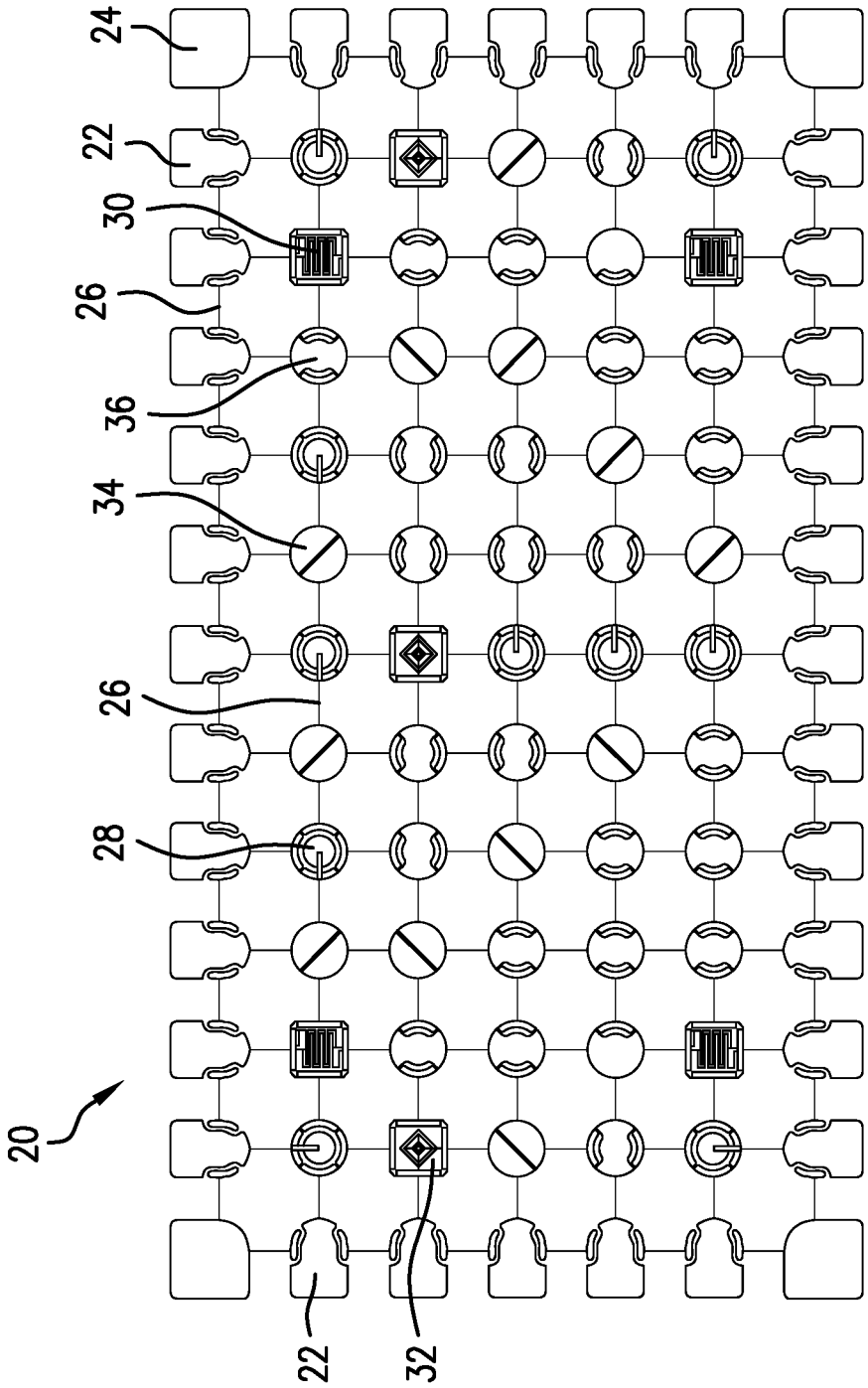

FIG. 1
(PRIOR ART)

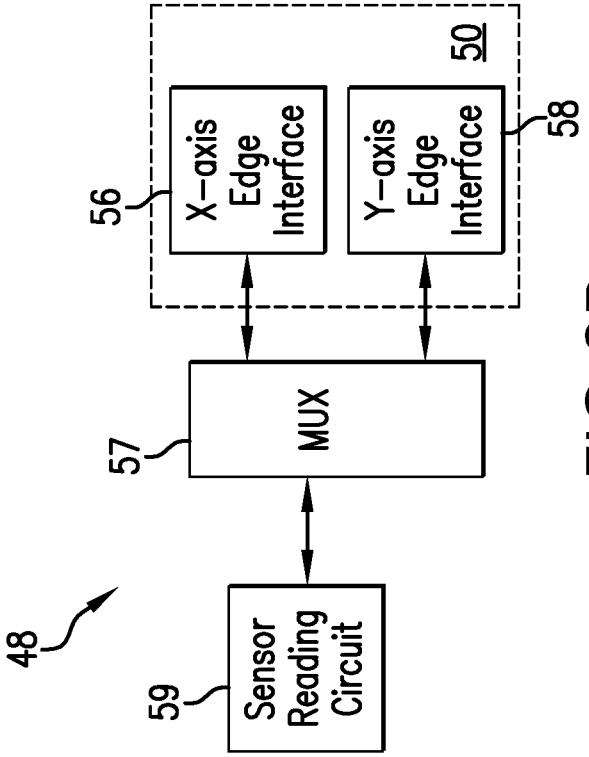
50
X-axis Edge Interface
Y-axis Edge Interface
56
58
MUX
57
48
Sensor Reading Circuit
59

FIG.2B

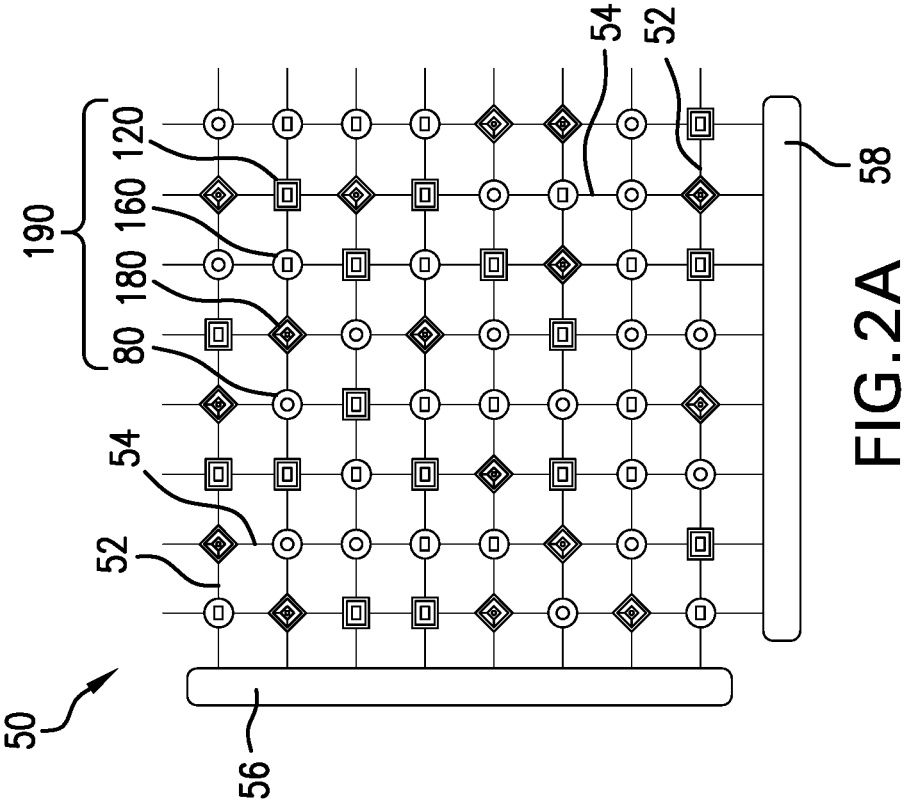
190
120
160
180
80
54
52
50
56
58

FIG.2A

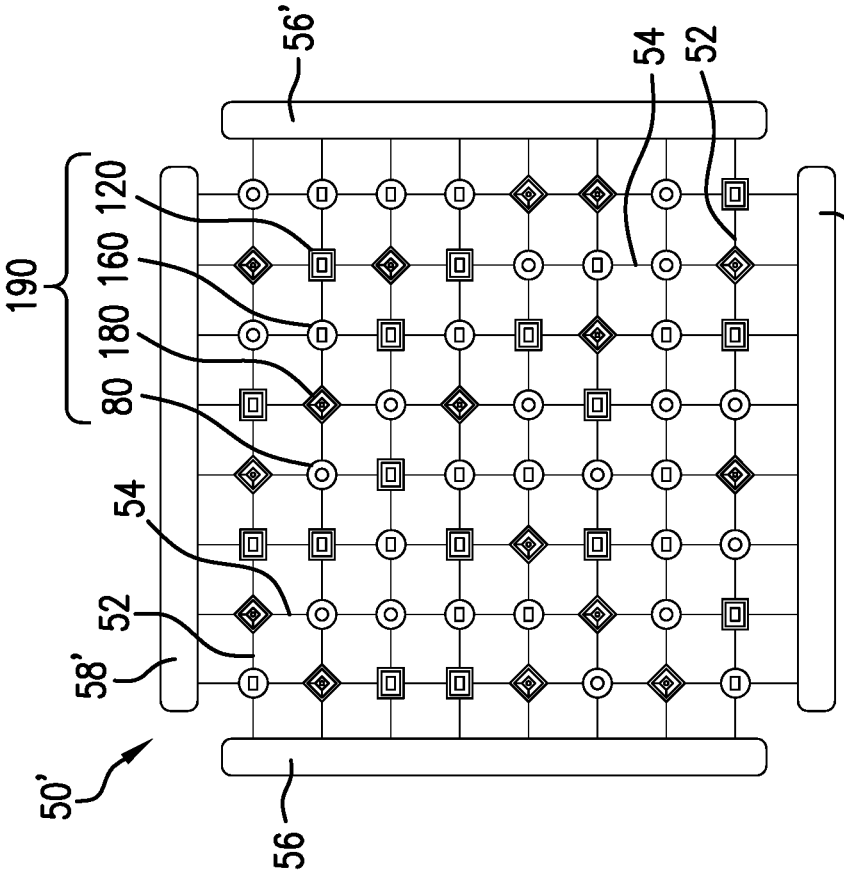

FIG.3

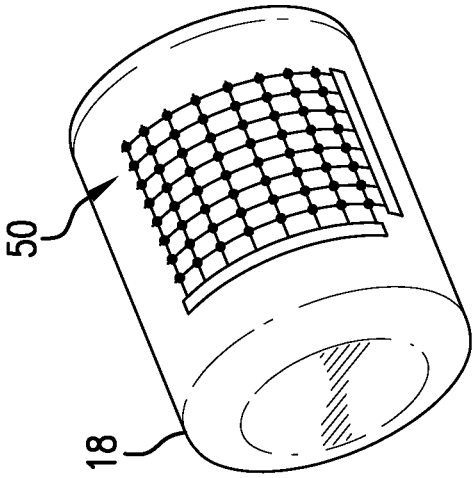

FIG.2C

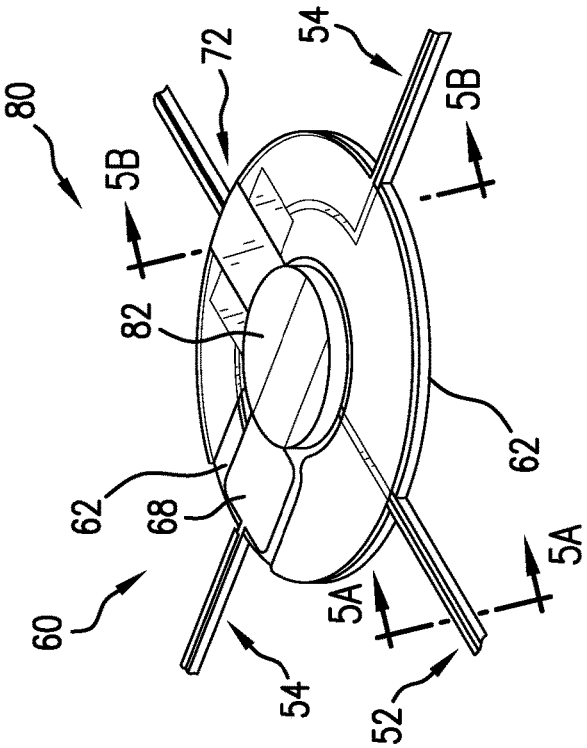

FIG.4B

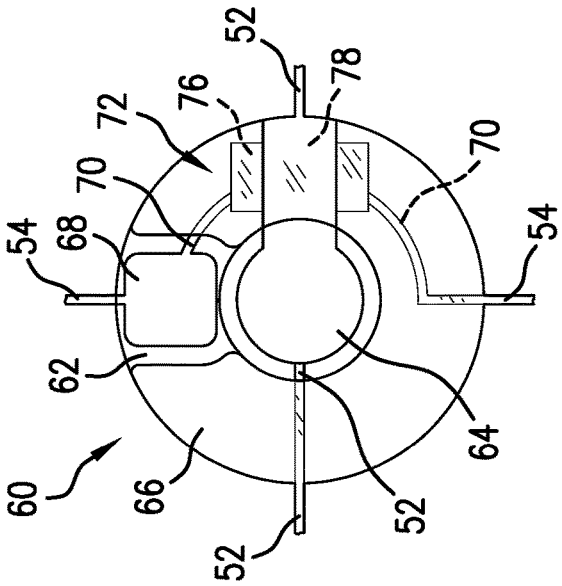

FIG.4A

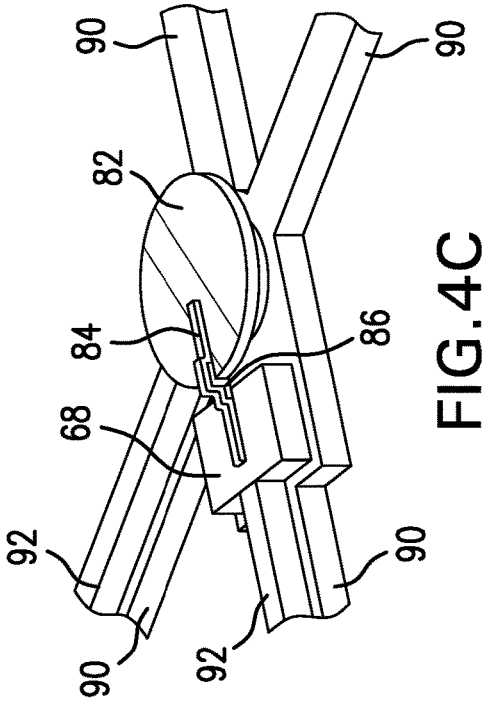

FIG.4C

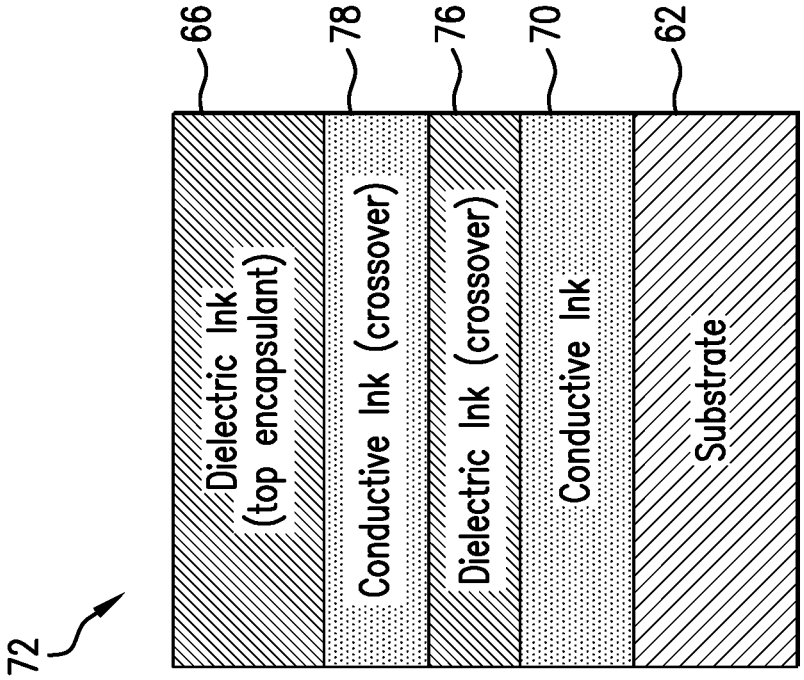
72
66
78
76
70
62
Dielectric Ink (top encapsulant)
Conductive Ink (crossover)
Dielectric Ink (crossover)
Conductive Ink
Substrate

FIG.5B

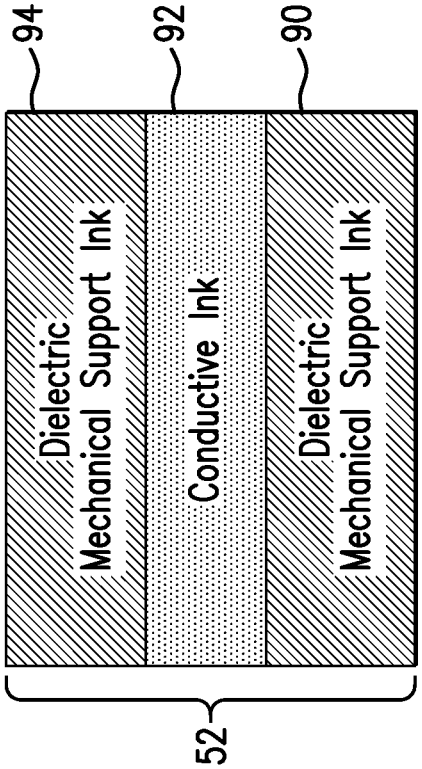
94
92
90
Dielectric Mechanical Support Ink
Conductive Ink
Dielectric Mechanical Support Ink
52

FIG.5A

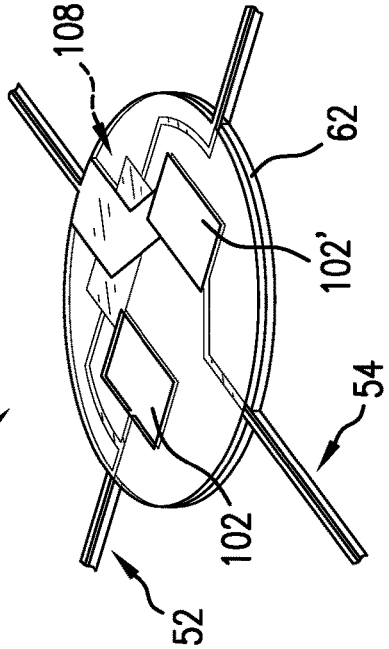

FIG.6B

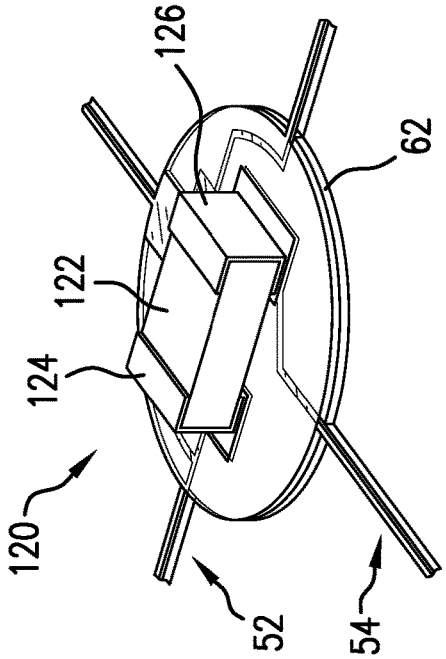

FIG.6C

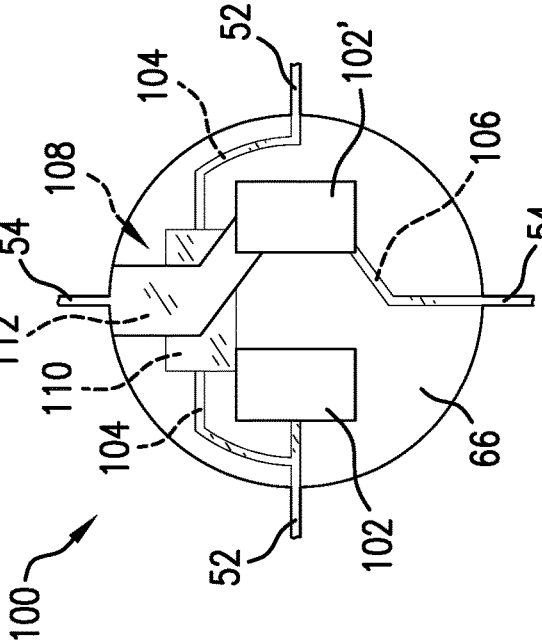

FIG.6A

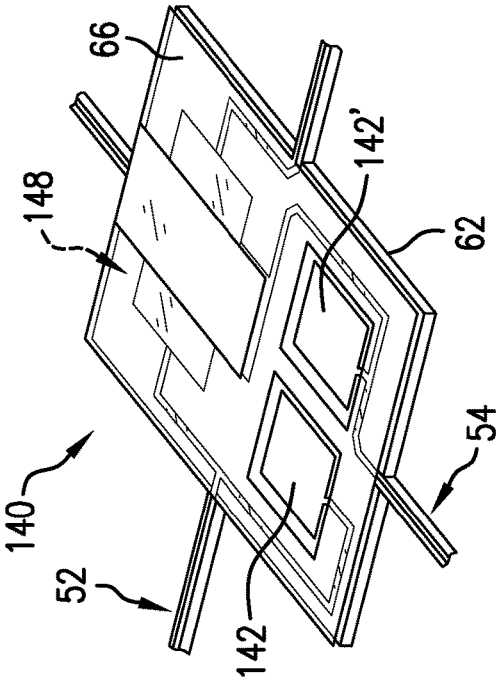

FIG. 7B

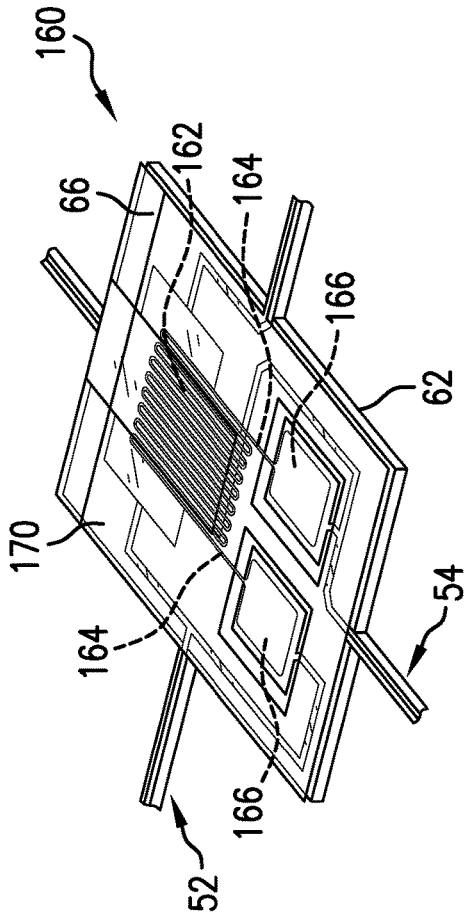

FIG. 7C

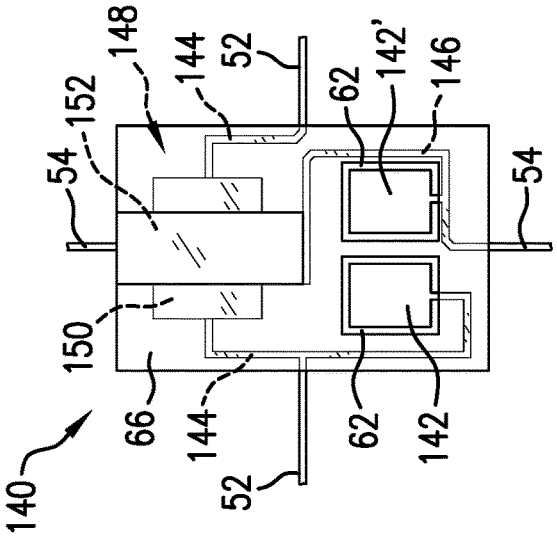

FIG. 7A

FABRICATION OF HIGH DENSITY SENSOR ARRAY

STATEMENT OF GOVERNMENT INTEREST

This invention was made with Government support under Contract No.: FA8650-15-2-5401, awarded by the Department of the Air Force. The Government has certain rights in the invention.

CROSS-REFERENCE TO RELATED APPLICATION(S)

This application is related to U.S. patent application Ser. No. 16/266,837, entitled "LARGE STRUCTURE MONITORING WITH A SUBSTRATE-FREE FLEXIBLE SENSOR SYSTEM", filed Feb. 4, 2019.

BACKGROUND

Asset monitoring is a critical safety and cost saving factor for a wide variety of aerospace, commercial, and infrastructure assets, with examples including aircraft components, road bridges, and automotive vehicles. The monitoring of parameters on an asset can be helpful in monitoring the lifecycle of that asset, including the detection of asset failure, or the detection of parameters that can lead to failure. Typically, a sensor that monitors a particular parameter at a particular point on an asset is mounted on or embedded in the surface of the asset. Additionally, electrical interconnects and associated circuitry are also generally required for asset monitoring. Individual sensors that are mounted on or near the surface of an asset can be helpful in the monitoring of that asset. However, it can be preferable to have a greater number of sensors across an asset's surface to allow for a greater density of monitored parameters. In some applications, a substrate containing sensors and interconnect circuitry can be applied to the monitored surface of an asset. Generally, the accompanying increase in size and/or weight of the asset monitoring system can have an adverse effect on the structural properties of the monitored surface, and/or the performance of the asset.

As the surface area density of monitoring points on an asset increases, the associated size and/or weight of the electrical interconnects and the associated circuitry for those sensors also increases. Moreover, as the monitored surface area of an asset increases, so too can the difficulty in fabricating the large network of sensors and associated routing interconnects. Manufacturing limitations can affect the ability to fabricate a sensor network for assets having a larger monitored surface area. Typically, as the number of sensors on a sensor network increases, so too does the complexity of routing interconnects that help provide external electrical connections to each of the sensors on the network. This can reduce the number of sensors that can be deployed on a particular sensor network. A need exists for a flexible sensor array that reduces or eliminates the need for routing interconnects dispersed throughout the lattice network of the sensor array.

SUMMARY

A sensor array having a lattice topology includes interconnects having an electrically-conductive layer sandwiched between two dielectric layers, the interconnects defining first-axis interconnects, second-axis interconnects, and interconnect junctions, sensor nodes located on associated interconnect junctions thereby defining an associated first-axis line and second-axis line, a sensor on an associated sensor node, a primary first-axis interconnect interface that is electrically connected to the first-axis interconnects, and a primary second-axis interconnect interface that is electrically connected to the second-axis interconnects. Each sensor node includes a first electrode that is electrically connected to an associated first-axis line, a second electrode that is electrically connected to an associated second-axis line, and a bypass bridge that electrically isolates the associated second-axis line from the associated first-axis line.

A method of interrogating a sensor in a sensor array having a lattice topology and including a plurality of interconnects having an electrically-conductive layer sandwiched between two dielectric layers defining first-axis interconnects, second-axis interconnects, and interconnect junctions, sensor nodes located on associated interconnect junctions thereby defining an associated first-axis line and second-axis line, a sensor on an associated sensor node, a primary first-axis interconnect interface that is electrically connected to the first-axis interconnects, and a primary second-axis interconnect interface that is electrically connected to the second-axis interconnects. Each sensor node includes a first electrode that is electrically connected to an associated first-axis line, a second electrode that is electrically connected to an associated second-axis line, and a bypass bridge that electrically isolates the associated second-axis line from the associated first-axis line. The method includes performing the steps of enabling one of the first-axis interconnects with the primary first-axis interconnect interface, enabling one of the second-axis interconnects with the primary second-axis interconnect interface, and interrogating the sensor corresponding to the enabled first-axis interconnect and the enabled second-axis interconnect with a sensor reading circuit.

BRIEF DESCRIPTION OF THE DRAWINGS

FIG. **1** is a top view of sensor system with routing interconnects of the prior art.

FIG. **2**A is a schematic view of a sensor array.

FIG. **2**B is a schematic block diagram of an interface for reading the sensor array shown in FIG. **2**A.

FIG. **2**C is a perspective view of the sensor array shown in FIG. **2**A deployed on an asset.

FIG. **3** is a schematic view of a second embodiment of the sensor array.

FIG. **4**A is a top view of a interconnect-sharing sensor node.

FIG. **4**B is a perspective view of the interconnect-sharing sensor node shown in FIG. **4**A with a piezoelectric sensor.

FIG. **4**C is a perspective view of the interconnect-sharing sensor node shown in FIG. **4**B showing the connection with the piezoelectric sensor.

FIG. **5**A is a schematic cross-sectional side view of an interconnect line on the interconnect-sharing sensor node shown in FIG. **4**B.

FIG. **5**B is a schematic cross-sectional side view of a cross-over pad on the interconnect-sharing sensor node shown in FIG. **4**B.

FIG. **6**A is a top view of a second embodiment of the interconnect-sharing sensor node.

FIG. **6**B is a perspective view of the interconnect-sharing sensor node shown in FIG. **6**A.

FIG. **6**C is a perspective view of the interconnect-sharing sensor node shown in FIG. **6**A with a resistance temperature detector sensor.

FIG. 7A is a top view of a third embodiment of the interconnect-sharing sensor node.

FIG. 7B is a perspective view of the interconnect-sharing sensor node shown in FIG. 7A.

FIG. 7C is a perspective view of the interconnect-sharing sensor node shown in FIG. 7A with a piezoresistive strain sensor.

DETAILED DESCRIPTION

FIG. **1** is a top view of a sensor system with routing interconnects of the prior art. Shown in FIG. **1** are sensor system **20**, edge contact pads **22**, corner contact pads **24**, interconnects **26**, piezoelectric sensors **28**, resistance temperature detectors **30**, strain sensors **32**, and routing junctions **34**, **36**. Sensor system **20** includes edge contact pads **22** and corner contact pads **24** around the periphery which provide external electrical connections to a network of overlapping interconnects **26**. Interconnects **26** are electrically-conductive strands that form a substrate-free lattice network that can be deployed on the surface of an asset (not labeled). Interconnects **26** are either vertically-oriented or horizontally-oriented, overlapping in a net-like pattern. Each overlap point can be referred to as an interconnect node (not labeled). A minority of the interconnect nodes are occupied by a sensor, either piezoelectric sensor **28**, resistance temperature detector (RTD) **30**, or strain sensor **32**. A majority of the interconnect nodes are occupied by a routing junction to form the network of electrical connections between piezoelectric sensors **28**, RTDs **30**, strain sensors **32**, edge contact pads **22**, and corner contact pads **24**, with exemplary routing junctions **34**, **36** being labeled. The ratio between the number of sensors (i.e., piezoelectric sensors **28**, RTDs **30**, strain sensors **32**) and the number of routing junctions (i.e., routing junctions **34**, **36**) can vary depending on various factors including the number of interconnect nodes and the specific types of sensors. In an exemplary embodiment, a particular sensor can be used in about 30% of the interconnect nodes, with the remaining 70% of interconnect nodes being used for routing junctions **34**, **36**.

FIG. **2**A is a schematic view of a sensor array. FIG. **2**B is a schematic block diagram of an interface for reading the sensor array shown in FIG. **2**A. FIG. **2**C is a perspective view of the sensor array shown in FIG. **2**A deployed on an asset. Shown in FIGS. **2**A-**2**C are monitored asset **18**, sensor array interface **48**, sensor array **50**, x-axis interconnects **52**, y-axis interconnects **54**, x-axis interconnect interface **56**, multiplexer **57**, y-axis interconnect interface **58**, sensor reading circuit **59**, piezoelectric sensor nodes **80**, resistance temperature detector (RTD) nodes **120**, strain sensor nodes **160**, **180**, and interconnect-sharing sensor nodes **190**. Piezoelectric sensor nodes **80**, RTD nodes **120**, and strain sensor nodes **160**, **180** can be generally referred to as interconnect-sharing sensor nodes **190**, as will be described. In the illustrated embodiment, sensor array **50** includes a network of overlapping x-axis interconnects **52** and y-axis interconnects **54** in a substantially rectangular array which can be described as a net-like structure. As depicted in FIG. **2**A, x-axis interconnects **52** are substantially parallel to each other. Similarly, y-axis interconnects **54** interconnects are substantially parallel to each other. It is to be appreciated that references to x- and y-axes are arbitrary, for descriptive purposes. Moreover, as used in the present disclosure, terms such as "vertical" and "horizontal" are arbitrary, as used in describing the various embodiments that are illustrated in the figures. All orientations are within the scope of the present disclosure without regard to spatial orientation.

Referring to FIG. **2**A, x-axis interconnects **52** can be called first-axis interconnects, and y-axis interconnects **54** can be called second-axis interconnects. Sensor array **50** can be described as having a lattice or net-like topology, with x-axis interconnects **52** overlapping y-axis interconnects **52** thereby forming a number of interconnect junctions. In the illustrated embodiment, x-axis interconnects **52** and y-axis interconnects **54** meet at substantially right angles. As will be described later in FIG. **5**A, x-axis interconnects **52** and y-axis interconnects **54** can include an electrically-conductive trace that is sandwiched between dielectric material (not shown in FIG. **2**). Accordingly, sensor array **50** is flexible and can conform to a curved surface of monitored asset **18**, as shown in FIG. **2**C. In the illustrated embodiment, monitored asset **18** is an aircraft nacelle. In other embodiments, monitored asset **18** can be any component whereby monitoring by sensor array **50** is desired, with non-limiting examples including aircraft components, vehicles, ships, buildings, and bridges. Referring again to FIG. **2**A, each of the x-axis interconnects **52** is electrically connected to x-axis interconnect interface **56**. Similarly, each of the y-axis interconnects **54** is electrically connected to y-axis interconnect interface **58**. In the illustrated embodiment, there are eight x-axis interconnects **52** and eight y-axis interconnects **54**, collectively forming sixty-four (64) interconnect intersection points (not labeled), with each interconnect intersection point being the location of a particular interconnect-sharing sensor node **190**. It is to be appreciated that the locations and the distribution of piezoelectric sensor nodes **80**, RTD nodes **120**, strain sensor nodes **160**, **180** is exemplary, and can be different in various embodiments. Each individual interconnect-sharing sensor node **190** is electrically connected between a respective x-axis interconnect **52** and y-axis interconnect **54**, as will be described in greater detail later in FIGS. **4**A-**4**C, **6**A-**6**C, and **7**A-**7**C. Each interconnect-sharing sensor node **190** is powered and interrogated with an interconnect-sharing architecture, as will be described. Line sharing means the sensor nodes share a common axis connected to the same transmission line (i.e., x-axis interconnects **52**, y-axis interconnects **54**), with the multiplexing of the power and ground connections to select (i.e., enable, interrogate) a particular interconnect-sharing sensor node **190** from which data are to be collected. The interconnect-sharing architecture of the present disclosure eliminates the need for routing junctions (e.g., routing junctions **34**, **36** as shown in FIG. **1**) throughout sensor array **50**. Sensor array **50** can also be referred to as a high-density sensor array or as a fully-populated sensor array, because, as shown in the illustrated embodiment, a interconnect-sharing sensor node **190** is located at every intersection of an x-axis interconnect **52** and a y-axis interconnect **54**.

Referring again to FIG. **2**A, sensor array **50** can be printed (i.e., additively-manufactured) on a sacrificial substrate (not shown) that is later removed. As used in this disclosure, "printing" is an additive-manufacturing process that can refer to any of a number of processes that can deposit material for fabricating a component or components. The sacrificial substrate can be a plate, sheet, or continuous roll of material, and can be thick or thin, and/or rigid or flexible. In a particular embodiment, the sacrificial substrate can be a thin-film material on a roll, whereby sensor array **50** is fabricated using a roll-to-roll (R2R) manufacturing process. In another particular embodiment, the sacrificial substrate can be a sheet of rigid or semi-rigid material, whereby sensor array **50** is fabricated using a large screen printing manufacturing process. The sacrificial substrate can be chemically soluble or insoluble, being chemically removed

from sensor array **50**. The lattice topology that defines sensor array **50** can be delivered by one of several possible additive manufacturing and/or printing methods, with non-limiting examples including screen printing, R2R, gravure printing, ink jet printing aerosol jet (AJ) deposition, material extrusion, extrusion direct-write microdispensing, ink jet printing, and thermal-spray deposition. Accordingly, sensor array **50** can be referred to as a substrate-free sensor array. The electrical interconnects to interconnect-sharing sensor nodes **190** will be described in greater detail later in FIGS. **4**A-**4**C, **6**A-**6**C, and **7**A-**7**C. The structure of x-axis interconnects **52** and y-axis interconnects **54** will be described in greater detail later in FIG. **5**A.

Referring to FIGS. **2**A-**2**B, during operation of sensor array **50**, a particular interconnect-sharing sensor node **190** is individually interrogated by multiplexer **57** by electrically connecting x-axis interconnect interface **56** to the associated x-axis interconnect **52**, and electrically connecting y-axis interconnect interface **58** to the associated y-axis interconnect **54**, thereby electrically coupling the respective interconnect-sharing sensor node **190** to sensor reading circuit **59**.

Referring to FIG. **2**B, during interrogation by the sensor reading circuit **59**, the interrogated (i.e., enabled) interconnect-sharing sensor node **190** electrically communicates a particular electrical signal to sensor reading circuit **59** via multiplexer **57**, x-axis interconnect interface **56**, and y-axis interconnect interface **58**. Multiplexer **57** can be referred to as a MUX or as a multiplexer circuit. The following discussion is provided as non-limiting examples of the various electrical signals that can be provided by any of the individual interconnect-sharing sensor nodes **190**. Piezoelectric sensor node **80** can provide a voltage signal that is representative of an impact (i.e., mechanical impact). RTD node **120** can provide a resistance (i.e., electrical resistance) value that is indicative of a temperature. Strain sensor nodes **160**, **180** can provide a resistance signal that is representative of level of strain (mechanical strain). In the illustrated embodiment, strain sensor nodes **180** are similar to strain sensor nodes **160**, while being offset at a 45 degree rotational angle. In some embodiments, other types of sensors can be used to detect pressure, vibration, light (i.e., photons), sound (i.e., acoustic waves), magnetism (e.g., Hall Effect, magnetoresistive (MR) sensor), and radio frequency (RF) waves, for example. In a particular embodiment, a micro-electrical mechanical system (MEMS) pressure sensor and/or MEMS accelerometer can be used. In these or other embodiments, various interconnect-sharing sensor nodes **190** can provide electrical signals that can be measured as a voltage, a waveform, a resistance, a capacitance, and/or an inductance. In other embodiments, one or more interconnect-sharing sensor nodes **190** can include energy storage devices and/or integrated circuits (ICs). In these or other embodiments, an interconnect-sharing sensor node **190** can be a transducer that detects and/or emits a particular signal. For example, a particular interconnect-sharing sensor node **190** can emit light, sound, and/or RF signals. Interconnect-sharing sensor nodes **190** that include light-emitting diodes (LEDs), piezoacoustic transducers, and RF antennas are exemplary embodiments. Accordingly, in some embodiments, a interconnect-sharing sensor node **190** can be referred to as an emitter. In an exemplary embodiment, an interconnect-sharing sensor node **190** can be a radio-frequency identification (RFID) chip.

Referring again to FIGS. **2**A-**2**B, a particular interconnect-sharing sensor node **190** is interrogated for a period of time that is sufficient to read the associated sensor, with the sensor reading time being dependent on the particular type of sensor. In an exemplary embodiment, each of the sixty-four (64) interconnect-sharing sensor nodes **190** on sensor array **50** can be interrogated in any sequence at any time, by temporarily making electrical connections via multiplexer **57** to x-axis interconnect interface **56** and y-axis interconnect interface **58**. The topology of sensor array **50** can also allow multiple interconnect-sharing sensor node **190** to be interrogated concurrently so long as no two interconnect-sharing sensor nodes **190** that share the same x-axis interconnect **52** and/or y-axis interconnect **52** are interrogated at the same time. Accordingly, in the illustrated embodiment, as many as eight interconnect-sharing sensor nodes **190** can be interrogated concurrently.

FIG. **3** is a schematic view of a second embodiment of the substrate-free high-density sensor array. Shown in FIG. **3** are sensor array **50'**, x-axis interconnects **52**, y-axis interconnects **54**, x-axis interconnect interfaces **56**, **56'**, y-axis interconnect interfaces **58**, **58'**, piezoelectric sensor nodes **80**, resistance temperature detector (RTD) nodes **120**, strain sensor nodes **160**, Wheatstone bridge sensor nodes **180**, and interconnect-sharing sensor nodes **190**, the description of each being substantially similar to that provided above in regard to FIG. **2**. X-axis interconnect interface **56** can be referred to as a primary x-axis interconnect interface, and x-axis interconnect interface **56'** can be referred to as a secondary x-axis interconnect interface. Similarly, y-axis interconnect interface **58** can be referred to as a primary y-axis interconnect interface, and x-axis interconnect interface **58'** can be referred to as a secondary y-axis interconnect interface. Each of the x-axis interconnects **52** are electrically connected to x-axis interconnect interfaces **56**, **56'**, which can also be referred to as a left and right x-axis interconnect interface, respectively, or as a first and second x-axis interconnect interface. Similarly, each of the y-axis interconnects **54** are electrically connected to y-axis interconnect interfaces **58**, **58'**, which can be referred to as a bottom and top y-axis interconnect interface, respectively, or as a first and second y-axis interconnect interface. X-axis interconnect interfaces **56**, **56'** and/or y-axis interconnect interfaces **58**, **58'** can also be referred to as sensor array edge interfaces. It is to be appreciated that the illustrated embodiment is exemplary, and that in another embodiment, x-axis interconnects **52** can be associated with a multiplexing interface and y-axis interconnects **54** can be associated with a multiplexing interface. Accordingly, x-axis interconnect interfaces **56**, **56'** can be referred to as primary and secondary x-axis multiplexing interfaces, respectively, and y-axis interconnect interfaces **58**, **58'** can be referred to as primary and secondary y-axis multiplexing interfaces. The designation of primary and secondary, as used in this regard, is merely to differentiate one from another without signifying one as being preferable over the other.

Referring again to FIG. **3**, x-axis interconnect interface **56'** (i.e., right x-axis interconnect interface) and y-axis interconnect interface **58'** (i.e., top y-axis interconnect interface) are controlled by multiplexer **57** independently from x-axis interconnect interface **56** (i.e., left x-axis interconnect interface) and y-axis interconnect interface **58** (i.e., bottom y-axis interconnect interface), thereby allowing two interconnect-sharing sensor nodes **190** to be simultaneously interrogated. In the illustrated embodiment, sensor array **50'** can be configured to interrogate various interconnect-sharing sensor nodes **190** at about twice the rate as with sensor array **50** shown in FIG. **2**.

Referring again to FIG. **3**, x-axis interconnect interfaces **56**, **56'** are redundant to each other, and y-axis interconnect

interfaces **58**, **58'** are also redundant to each other. Accordingly, in some embodiments, sensor array **50'** and/or sensor reading circuit **59** can be configured to identify and localize a fault (i.e., breakage) in a particular x-axis interconnect **52** and/or y-axis interconnect **54**, thereby allowing any particular interconnect-sharing sensor node **190** to be interrogated by an associated x-axis interconnect interface **56**, **56'** and y-axis interconnect interface **58**, **58'** depending on the particular location of the fault. This can be accomplished by embedding multiplexing capabilities within sensor array **50'**, or externally using x-axis and y-axis edge interfaces **56**, **58** and multiplexer **57**.

FIG. **4**A is a top view of an interconnect-sharing sensor node. FIG. **4**B is a perspective view of the interconnect-sharing sensor node shown in FIG. **4**A with a piezoelectric sensor. FIG. **4**C is a perspective view of the interconnect-sharing sensor node shown in FIG. **4**B showing the connection with the piezoelectric sensor. Shown in FIGS. **4**A-**4**C are x-axis interconnect **52**, y-axis interconnect **54**, piezoelectric sensor junction **60**, substrate **62**, bottom electrode **64**, dielectric top layer **66**, top electrode **68**, interconnect bypass **70**, bypass bridge **72**, dielectric crossover **76**, conductive crossover **78**, piezoelectric sensor node **80**, piezoelectric sensor **82**, conductive link **84**, dielectric ink **86**, bottom mechanical support ink **90**, conductive ink **92**, and top mechanical support ink **94**.

Piezoelectric sensor junction **60** is located at the intersection of a particular x-axis interconnect **52** and y-axis interconnect **54**, as described above in regard to FIG. **2**. Substrate **62** forms the base (i.e., support structure) for piezoelectric sensor junction **60**. In the illustrated embodiment, substrate **62** is a dielectric material that can be polyimide (e.g., KAPTON®), polyethylene terephthalate, or polycarbonate, thermoplastic, or cured resin materials. Bottom electrode **64** is deposited on substrate **62**, being electrically connected to x-axis interconnect **52**, with conductive crossover **78** completing the electrical conduction path of x-axis interconnect **52** through piezoelectric sensor junction **60**. Top electrode **68** is deposited on substrate **62**, being electrically connected to y-axis interconnect **54**, with interconnect bypass **70** completing the electrical conduction path of y-axis interconnect **54** through piezoelectric sensor junction **60**. Dielectric top layer **66** provides an overcoat on piezoelectric sensor junction **60**. Bypass bridge **72** is formed by dielectric crossover **76** electrically isolating interconnect bypass **70** from conductive crossover **78**, and will be described in greater detail later in FIG. **5**B. Piezoelectric sensor node **80** is formed by placing piezoelectric sensor **82** on bottom electrode **64**, thereby providing an electrical connection between x-axis interconnect **52** and piezoelectric sensor **82**, then depositing conductive link **84** to provide an electrical connection between y-axis interconnect **54** (i.e., top electrode **68**) and piezoelectric sensor **82**. In the illustrated embodiment, piezoelectric sensor **82** is deposited on piezoelectric sensor junction **60** using a pick-and-place (PnP) manufacturing process, thereby forming a flexible hybrid electronic (FHE) network. In the illustrated embodiment, dielectric ink **86** is deposited to provide an electrically-insulating barrier between conductive link **84** and piezoelectric sensor **82**. A top mechanical support ink (not shown in FIGS. **4**A-**4**C) can be deposited over piezoelectric sensor node **80**. X-axis interconnects **52** and y-axis interconnects **54** include bottom mechanical support ink **90** and conductive ink **92**, as shown in FIG. **4**C, and will be described in greater detail later in FIG. **5**A. When deployed on sensor array **50**, **50'**, one or more piezoelectric sensor nodes **80** can be used to detect an impact (i.e., mechanical impact) on or near the surface of monitored asset **18**.

Piezoelectric sensor node **80** is manufactured using one or more of any additive manufacturing process (e.g., as described above in regard to FIG. **2**A). In an exemplary embodiment, the various features of piezoelectric sensor node **80** (i.e., including piezoelectric sensor junction **60**) can be made using a curable resin. In some embodiments, the curable resin can be a photopolymer (i.e., light-activated resin) that changes properties when exposed to light. A photopolymer that is optimized to respond to ultraviolet (UV) light is known as a UV-curable resin. The process by which printing ink (e.g., photopolymer resin) becomes more viscous or solidifies is also known as curing. A photopolymer cures by the action of photoinitiators that absorb photon energy during exposure to light of a particular wavelength or range of wavelengths. As the printing ink (i.e., photopolymer resin) cures, it becomes sufficiently viscous or solid, while also bonding to any solid material that it is in contact with. In other embodiments, the curable resin can be responsive to an elevated temperature for initiating the curing process. In yet other embodiments, the curable resin can be a thermoplastic, thermoset resin, or thermally-cured ink that uses a thermal solvent for evaporation/sintering of the ink. In yet other embodiments, non-resin materials can be used for one or more of the various features (i.e., layers) of piezoelectric sensor node **80**. As used in this disclosure, "curable material" described any material that can undergo viscofication, hardening, and/or solidification during a fabrication process. Accordingly, both resins (i.e., photoresins, thermal-resins) and non-resins can be curable materials. Non-limiting examples of curable non-resins include thermal plastics, inks, metals, and/or other materials that can be deposited (i.e., printed) as powders, molten materials, liquids, and the like by one or more additive-manufacturing processes (e.g., cold spray, thermal spray, thermal solvent evaporation, sintering). It is to be appreciated that the various features (i.e., layers) of piezoelectric sensor node **80** can be made of different curable materials, for example, as described above.

FIG. **5**A is a schematic cross-sectional side view of x-axis interconnect **52** on piezoelectric sensor node **80** shown in FIG. **4**B. Shown in FIG. **5**A are x-axis interconnect **52**, which includes bottom mechanical support ink **90**, conductive ink **92**, and top mechanical support ink **94**. Discussion will be made with regard to a representative x-axis interconnect **52**, while appreciating that y-axis interconnects **54** can have the same or a similar structure. X-axis interconnect **52** can be about 80 microns wide (i.e., 80 μm) and 80 microns thick. In some embodiments, x-axis interconnects **52** can be less than 80 microns wide and/or 80 microns thick. In other embodiments, x-axis interconnects **52** can be more than 80 microns wide and/or 80 microns thick. In a particular embodiment, x-axis interconnects **52** can be more than 200 microns wide and/or 200 microns thick. In some embodiments, the width of a particular x-axis interconnect **52** can be either greater than or less than the thickness. In some of these embodiments, the width of a particular x-axis interconnect **52** can be much greater than the thickness. In designing sensor array **50**, several factors can be considered in the selection of the size (i.e., width and thickness) of x-axis interconnects **52** (i.e., and/or y-axis interconnects **54**). Non-limiting examples of these factors can include the current-carrying capacity of x-axis interconnects **52**, the desired electrical resistance of x-axis interconnect **52**, the materials used in x-axis interconnect **52**, and the allowable size and/or weight of sensor array **50**. In the illustrated

embodiment, the conductive ink **92** (i.e., the electrically-conductive portion of x-axis interconnect **52**) can be made from conductive inks containing silver, copper, aluminum, gold, platinum, ruthenium, carbon, and/or alloys of these metals. In other embodiments, conductive ink **92** can be made from these and/or other metals, alloys, partial conductors, and/or composites. Bottom mechanical support ink **90** and top mechanical support ink **94** (i.e., dielectric, mechanical support ink) can be made from photoset and/or thermoset polymer dielectric inks, extruded thermoplastics, or the like (e.g., as described above in regard to FIGS. **4**A-**4**C). In the illustrated embodiment, x-axis interconnects **52** are flexible (i.e., bendable, conformable), thereby enabling sensor array **50** to conform to a curved surface when so positioned. It is to be appreciated that the various layers (i.e., bottom mechanical support ink **90**, conductive ink **92**, and top mechanical support ink **94**) can be made of different curable materials, for example, as described above.

FIG. **5**B is a schematic cross-sectional side view of bypass bridge **72** on piezoelectric sensor node **80** shown in FIG. **4**B. Shown in FIG. **5**B are substrate **62**, dielectric top layer **66**, interconnect bypass **70**, dielectric crossover **76**, and conductive crossover **78**, all being described as above in regard to FIGS. **4**A-**4**C. Interconnect bypass **70** can be referred to as an electrically-conductive layer or trace. Similarly, conductive crossover **78** can be referred to as an electrically-conductive layer or trace. Bypass bridge **72** can also be referred to as a cross-over bridge.

FIG. **6**A is a top view of a second embodiment of the interconnect-sharing sensor node configured as a resistance temperature detector (RTD) junction (i.e., for RTD node **120** as shown in FIG. **2**A). FIG. **6**B is a perspective view of the interconnect-sharing sensor node shown in FIG. **6**A. FIG. **6**C is a perspective view of the interconnect-sharing sensor node shown in FIG. **6**A with a resistance temperature detector (RTD) sensor. Shown in FIGS. **6**A-**6**C are x-axis interconnect **52**, y-axis interconnect **54**, substrate **62**, dielectric top layer **66**, RTD junction **100**, electrodes **102**, **102'**, interconnect bypass **104**, interconnect extension **106**, bypass bridge **108**, dielectric crossover **110**, conductive crossover **112**, resistance temperature detector (RTD) node **120**, resistance temperature detector (RTD) element **122**, and resistance temperature detector (RTD) edge pads **124**, **126**. The description of x-axis interconnect **52**, y-axis interconnect **54**, substrate **62**, and dielectric top layer **66** are as provided above in regard to FIGS. **4**A-**4**C. RTD junction **100** includes electrodes **102**, **102'**, each providing an electrical connection to respective edge pads **124**, **126** of RTD element **122**. Electrode **102** is electrically connected to x-axis interconnect **52**, and electrode **102'** is electrically connected to y-axis interconnect **54**. The description of interconnect bypass **104**, bypass bridge **108**, dielectric crossover **110**, and conductive crossover **112** are substantially as provided above in regard to FIGS. **4**A-**4**C, while noting that interconnect bypass **104** completes the electrical conduction path of x-axis interconnect **52** under bypass bridge **108** (i.e., cross-over bridge). Interconnect extension **106** completes the electrical conduction path of y-axis interconnect **54**. In the illustrated embodiment, RTD element **122** is deposited on RTD sensor junction **100** using a pick-and-place (PnP) manufacturing process, thereby forming a flexible hybrid electronic (FHE) network. A top mechanical support ink (not shown in FIGS. **6**A-**6**C) can be deposited over RTD node **120**. When deployed on sensor array **50**, **50'**, one or more RTD nodes **120** (i.e., including RTD element **122**) can be used to detect a temperature value at or near the surface of monitored asset **18**.

FIG. **7**A is a top view of a third embodiment of the interconnect-sharing sensor node configured as a strain sensor junction (i.e., for strain sensor node **160** as shown in FIG. **2**A). FIG. **7**B is a perspective view of the interconnect-sharing sensor node shown in FIG. **7**A. FIG. **7**C is a perspective view of the interconnect-sharing sensor node shown in FIG. **7**A with a piezoresistive strain sensor. Shown in FIGS. **7**A-**7**C are x-axis interconnect **52**, y-axis interconnect **54**, substrate **62**, dielectric top layer **66**, strain sensor junction **140**, electrodes **142**, **142'**, interconnect bypass **144**, interconnect extension **146**, bypass bridge **148**, dielectric crossover **150**, conductive crossover **152**, strain sensor node **160**, strain sensor element **162**, strain sensor leads **164**, strain sensor electrodes **166**, and strain sensor overcoat **170**. The description of x-axis interconnect **52**, y-axis interconnect **54**, substrate **62**, dielectric top layer **66**, strain sensor junction **140**, electrodes **142**, **142'**, interconnect bypass **144**, interconnect extension **146**, bypass bridge **148**, dielectric crossover **150**, and conductive crossover **152** are substantially as provided above in regard to FIGS. **4**A-**4**C and **6**A-**6**C. Strain sensor node **160** includes strain sensor element **162**, strain sensor leads **164**, and strain sensor electrodes **166**, electrically connected to x-axis interconnect **52** by electrode **142**, and to y-axis interconnect **54** by electrode **142'**, respectively. Strain sensor overcoat **170** covers strain sensor element **162**, thereby sandwiching strain sensor element **162** between conductive crossover **152** and strain sensor overcoat **170**. In the illustrated embodiment, strain sensor element **162** is a piezoresistive material having a serpentine pattern, thereby producing a resistance value indicative of a level of strain (i.e., material strain) on the surface of monitored asset **18** where strain sensor node **160** (i.e., sensor array **50**, **50'**) is deployed.

Piezoelectric sensor nodes **80**, RTD nodes **120**, and strain sensor nodes **160** are exemplary of the various sensors that can be deployed on sensor array **50**, **50'**, and all other types of sensors and/or transducers are within the scope of the present disclosure. Non-limiting examples of other types of sensors and/or transducers were described above in regard to FIG. **2**.

Referring back to FIGS. **2**-**3**, sensor array **50**, **50'** is shown as including eight x-axis interconnects **52** and eight y-axis interconnects **54**, collectively forming sixty-four (64) interconnect-sharing sensor nodes **190**. In some embodiments, one or more interconnect-sharing sensor nodes **190** can be omitted from sensor array **50**, **50'**, with the particular intersection of x-axis interconnect **52** and y-axis interconnect **54** being a crossing of the respective x-axis interconnect **52** and y-axis interconnect **54** (i.e., physically contacting and electrically insulating). In these embodiments, sensor array **50**, **50'** can be referred to as a de-populated sensor array while remaining within the scope of the present disclosure (i.e., high-density sensor array). Moreover, sensor array **50**, **50'** can include either more than or fewer than eight x-axis interconnects **52**, and/or either more than or fewer than eight y-axis interconnects **52**. All numbers of x-axis interconnects **52** and/or y-axis interconnects **54** are within the scope of the present disclosure.

Discussion of Possible Embodiments

The following are non-exclusive descriptions of possible embodiments of the present invention.

A sensor array having a lattice topology, comprising: a plurality of interconnects comprising an electrically-conductive layer sandwiched between two dielectric layers, the plurality of interconnects defining: a plurality of first-axis

interconnects; a plurality of second-axis interconnects; and a plurality of interconnect junctions; a plurality of sensor nodes, each disposed on an associated interconnect junction defining an associated first-axis line and second-axis line; a plurality of sensors, each disposed on an associated sensor node; a primary first-axis interconnect interface, electrically connected to the plurality of first-axis interconnects; and a primary second-axis interconnect interface, electrically connected to the plurality of second-axis interconnects; wherein each of the plurality of sensor nodes comprises: a first electrode, electrically connected to an associated first-axis line; a second electrode, electrically connected to an associated second-axis line; and a bypass bridge, electrically isolating the associated second-axis line from the associated first-axis line.

The sensor array of the preceding paragraph can optionally include, additionally and/or alternatively, any one or more of the following features, configurations and/or additional components:

A further embodiment of the foregoing sensor array, wherein the interconnects are flexible, thereby allowing the sensor array to conform to a curved surface profile.

A further embodiment of the foregoing sensor array, wherein: the electrically-conductive layer comprises at least one of silver, copper, aluminum, gold, platinum, ruthenium, carbon, and/or alloys thereof; and each of the dielectric layers comprises a cured base material.

A further embodiment of the foregoing sensor array, wherein the bypass bridge comprises: an electrically-insulating substrate; a first electrically-conductive trace, disposed on the electrically-insulating substrate; a dielectric layer, disposed on the first conductive layer; and a second electrically-conductive trace, disposed on the dielectric layer, the second electrically-conductive trace being electrically isolated from the first electrically-conductive trace.

A further embodiment of the foregoing sensor array, wherein the primary first-axis interconnect interface and the primary second-axis interconnect interface can enable one of the plurality of first-axis interconnects and one of the plurality second-axis interconnects, respectively, thereby interrogating a sensor node associated with the enabled first-axis interconnect and the enabled second-axis interconnect.

A further embodiment of the foregoing sensor array, further comprising: a secondary first-axis interconnect interface, electrically connected to the plurality of first-axis interconnects; and a secondary second-axis interconnect interface, electrically connected to the plurality of second-axis interconnects.

A further embodiment of the foregoing sensor array, wherein two of the plurality of sensors can be interrogated at the same time by simultaneously: enabling one of the plurality of first-axis interconnects by the primary first-axis interconnect interface; enabling one of the plurality of second-axis interconnects by the primary second-axis interconnect interface; enabling another of the plurality of first-axis interconnects by the secondary first-axis interconnect interface; and enabling another of the plurality of second-axis interconnects by the secondary second-axis interconnect interface.

A further embodiment of the foregoing sensor array, wherein the primary and secondary first-axis interconnect interfaces are configured to: identify a fault on one or more of the plurality of first-axis interconnects; and interrogate any of the plurality of sensors by enabling an associated first-axis interconnect and an associated second-axis interconnect.

A further embodiment of the foregoing sensor array, wherein the primary and secondary second-axis interconnect interfaces are configured to: identify a fault on one or more of the plurality of second-axis interconnects; and interrogate any of the plurality of sensors by enabling an associated first-axis interconnect and an associated second-axis interconnect

A further embodiment of the foregoing sensor array, wherein the sensor array is additively-manufactured.

A further embodiment of the foregoing sensor array, wherein the sensor array is configured to be disposed on a surface of an asset.

A further embodiment of the foregoing sensor array, wherein each of the plurality of sensors is selected from the group consisting of a piezoelectric sensor, a resistance temperature detector (RTD), a piezoresistive sensor, a micro-electrical mechanical system (MEMS) pressure sensor, and a MEMS accelerometer.

A method of interrogating a sensor in a sensor array having a lattice topology, the sensor array comprising a plurality of interconnects comprising an electrically-conductive layer sandwiched between two dielectric layers defining a plurality of first-axis interconnects, a plurality of second-axis interconnects, and a plurality of interconnect junctions, a plurality of sensor nodes, each disposed on an associated interconnect junction defining an associated first-axis line and second-axis line, a plurality of sensors, each disposed on an associated sensor node, a primary first-axis interconnect interface, electrically connected to the plurality of first-axis interconnects, and a primary second-axis interconnect interface, electrically connected to the plurality of second-axis interconnects, the method comprising performing the steps of: (a) enabling, with the primary first-axis interconnect interface, one of the plurality of first-axis interconnects; (b) enabling, with the primary second-axis interconnect interface, one of the plurality of second-axis interconnects; and (c) interrogating one of the plurality of sensors corresponding to the enabled first-axis interconnect and the enabled second-axis interconnect.

The method of the preceding paragraph can optionally include, additionally and/or alternatively, any one or more of the following features, configurations and/or additional components:

A further embodiment of the foregoing method, wherein each of the plurality of sensor nodes comprises: a first electrode, electrically connected to an associated first-axis line; a second electrode, electrically connected to associated second-axis line; and a bypass bridge, electrically isolating the associated second-axis line from the associated first-axis line.

A further embodiment of the foregoing method, wherein: the electrically-conductive layer comprises silver, copper, aluminum, gold, platinum, ruthenium, carbon, and/or alloys thereof; and each of the dielectric layers comprises a cured base material.

A further embodiment of the foregoing method, wherein the interconnects are flexible, thereby allowing the sensor array to conform to a curved surface profile.

A further embodiment of the foregoing method, wherein the bypass bridge comprises: an electrically-insulating substrate; a first electrically-conductive trace, disposed on the electrically-insulating substrate; a dielectric layer, disposed on the first conductive layer; and a second electrically-conductive trace, disposed on the dielectric layer, the second electrically-conductive trace being electrically isolated from the first electrically-conductive trace.

A further embodiment of the foregoing method, wherein each of the plurality of sensors is selected from the group consisting of a piezoelectric sensor, a resistance temperature detector (RTD), a piezoresistive sensor, a micro-electrical mechanical system (MEMS) pressure sensor, and a MEMS accelerometer.

A further embodiment of the foregoing method, further comprising performing the steps of: enabling, with a secondary first-axis interconnect interface electrically connected to the plurality of first-axis interconnects, one of the plurality of first-axis interconnects; and enabling, with a secondary second-axis interconnect interface electrically connected to the plurality of second-axis interconnects, one of the plurality of second-axis interconnects.

A further embodiment of the foregoing method, identifying a fault on one or more of the plurality of second-axis interconnects; and interrogating any of the plurality of sensors by enabling an associated first-axis interconnect and an associated second-axis interconnect.

While the invention has been described with reference to an exemplary embodiment(s), it will be understood by those skilled in the art that various changes may be made and equivalents may be substituted for elements thereof without departing from the scope of the invention. In addition, many modifications may be made to adapt a particular situation or material to the teachings of the invention without departing from the essential scope thereof. Therefore, it is intended that the invention not be limited to the particular embodiment(s) disclosed, but that the invention will include all embodiments falling within the scope of the appended claims.

The invention claimed is:

1. A sensor array having a lattice topology, comprising:
- a plurality of interconnects comprising an electrically-conductive layer sandwiched between two dielectric layers, the plurality of interconnects defining:
  - a plurality of first-axis interconnects;
  - a plurality of second-axis interconnects; and
  - a plurality of interconnect junctions;
- a plurality of sensor nodes, each disposed on an associated interconnect junction defining an associated first-axis line and second-axis line;
- a plurality of sensors, each disposed on an associated sensor node;
- a primary first-axis interconnect interface, electrically connected to the plurality of first-axis interconnects; and
- a primary second-axis interconnect interface, electrically connected to the plurality of second-axis interconnects;
- wherein each of the plurality of sensor nodes comprises:
  - a first electrode, electrically connected to an associated first-axis line;
  - a second electrode, electrically connected to an associated second-axis line; and
  - a bypass bridge, electrically isolating the associated second-axis line from the associated first-axis line.

2. The sensor array of claim **1**, wherein the interconnects are flexible, thereby allowing the sensor array to conform to a curved surface profile.

3. The sensor array of claim **1**, wherein:
- the electrically-conductive layer comprises at least one of silver, copper, aluminum, gold, platinum, ruthenium, carbon, and/or alloys thereof; and
- each of the dielectric layers comprises a cured base material.

4. The sensor array of claim **1**, wherein the bypass bridge comprises:
- an electrically-insulating substrate;
- a first electrically-conductive trace, disposed on the electrically-insulating substrate;
- a dielectric layer, disposed on the first conductive layer; and
- a second electrically-conductive trace, disposed on the dielectric layer, the second electrically-conductive trace being electrically isolated from the first electrically-conductive trace.

5. The sensor array of claim **1**, wherein the primary first-axis interconnect interface and the primary second-axis interconnect interface can enable one of the plurality of first-axis interconnects and one of the plurality second-axis interconnects, respectively, thereby interrogating a sensor node associated with the enabled first-axis interconnect and the enabled second-axis interconnect.

6. The sensor array of claim **1**, further comprising:
- a secondary first-axis interconnect interface, electrically connected to the plurality of first-axis interconnects; and
- a secondary second-axis interconnect interface, electrically connected to the plurality of second-axis interconnects.

7. The sensor array of claim **6**, wherein two of the plurality of sensors can be interrogated at the same time by simultaneously:
- enabling one of the plurality of first-axis interconnects by the primary first-axis interconnect interface;
- enabling one of the plurality of second-axis interconnects by the primary second-axis interconnect interface;
- enabling another of the plurality of first-axis interconnects by the secondary first-axis interconnect interface; and
- enabling another of the plurality of second-axis interconnects by the secondary second-axis interconnect interface.

8. The sensor array of claim **6**, wherein the primary and secondary first-axis interconnect interfaces are configured to:
- identify a fault on one or more of the plurality of first-axis interconnects; and
- interrogate any of the plurality of sensors by enabling an associated first-axis interconnect and an associated second-axis interconnect.

9. The sensor array of claim **6**, wherein the primary and secondary second-axis interconnect interfaces are configured to:
- identify a fault on one or more of the plurality of second-axis interconnects; and
- interrogate any of the plurality of sensors by enabling an associated first-axis interconnect and an associated second-axis interconnect.

10. The sensor array of claim **1**, wherein the sensor array is additively-manufactured.

11. The sensor array of claim **1**, wherein the sensor array is configured to be disposed on a surface of an asset.

12. The sensor array of claim **1**, wherein each of the plurality of sensors is selected from the group consisting of a piezoelectric sensor, a resistance temperature detector (RTD), a piezoresistive sensor, a micro-electrical mechanical system (MEMS) pressure sensor, and a MEMS accelerometer.

13. A method of interrogating a sensor in a sensor array having a lattice topology, the sensor array comprising:

a plurality of interconnects comprising an electrically-conductive layer sandwiched between two dielectric layers, the plurality of interconnects defining:

a plurality of first-axis interconnects;

a plurality of second-axis interconnects; and

a plurality of interconnect junctions;

a plurality of sensor nodes, each disposed on an associated interconnect junction defining an associated first-axis line and second-axis line;

a plurality of sensors, each disposed on an associated sensor node;

a primary first-axis interconnect interface, electrically connected to the plurality of first-axis interconnects; and

a primary second-axis interconnect interface, electrically connected to the plurality of second-axis interconnects;

wherein each of the plurality of sensor nodes comprises:

a first electrode, electrically connected to an associated first-axis line;

a second electrode, electrically connected to an associated second-axis line; and

a bypass bridge, electrically isolating the associated second-axis line from the associated first-axis line;

the method comprising performing the steps of:

(a) enabling, with the primary first-axis interconnect interface, one of the plurality of first-axis interconnects;

(b) enabling, with the primary second-axis interconnect interface, one of the plurality of second-axis interconnects; and

(c) interrogating one of the plurality of sensors corresponding to the enabled first-axis interconnect and the enabled second-axis interconnect.

14. The method of claim **13**, wherein:

the electrically-conductive layer comprises silver, copper, aluminum, gold, platinum, ruthenium, carbon, and/or alloys thereof; and

each of the dielectric layers comprises a cured base material.

15. The method of claim **13**, wherein the interconnects are flexible, thereby allowing the sensor array to conform to a curved surface profile.

16. The method of claim **13**, wherein the bypass bridge comprises:

an electrically-insulating substrate;

a first electrically-conductive trace, disposed on the electrically-insulating substrate;

a dielectric layer, disposed on the first conductive layer; and

a second electrically-conductive trace, disposed on the dielectric layer, the second electrically-conductive trace being electrically isolated from the first electrically-conductive trace.

17. The method of claim **13**, wherein each of the plurality of sensors is selected from the group consisting of a piezoelectric sensor, a resistance temperature detector (RTD), a piezoresistive sensor, a micro-electrical mechanical system (MEMS) pressure sensor, and a MEMS accelerometer.

18. The method of claim **13**, further comprising performing the steps of:

enabling, with a secondary first-axis interconnect interface electrically connected to the plurality of first-axis interconnects, one of the plurality of first-axis interconnects; and

enabling, with a secondary second-axis interconnect interface electrically connected to the plurality of second-axis interconnects, one of the plurality of second-axis interconnects.

19. The method of claim **18**, further comprising the steps of:

identifying a fault on one or more of the plurality of second-axis interconnects; and

interrogating any of the plurality of sensors by enabling an associated first-axis interconnect and an associated second-axis interconnect.

* * * * *