US 20210183808A1

(19) United States

(12) Patent Application Publication

(10) Pub. No.: US 2021/0183808 A1

(43) Pub. Date: Jun. 17, 2021

Esler et al.

(54) **SENSOR SYSTEMS AND METHODS FOR PROVIDING SENSOR SYSTEMS**

(71) Applicant: **General Electric Company**, Schenectady, NY (US)

(72) Inventors: **David Richard Esler**, Gloversville, NY (US); **Nancy Cecelia Stoffel**, Niskayuna, NY (US)

(21) Appl. No.: **16/713,437**

(22) Filed: **Dec. 13, 2019**

Publication Classification

(51) **Int. Cl.**

H01L 23/00	(2006.01)
H01L 41/047	(2006.01)
B81B 7/00	(2006.01)

(52) **U.S. Cl.**

CPC ***H01L 24/73*** (2013.01); *B81C 1/00301* (2013.01); ***H01L 24/08*** (2013.01); ***H01L 41/0475*** (2013.01); ***H01L 24/11*** (2013.01); ***H01L 24/92*** (2013.01); ***B81B 7/0006*** (2013.01); ***H01L 24/32*** (2013.01); ***H01L 24/13*** (2013.01); *H01L 2224/73104* (2013.01); *H01L 2224/73204* (2013.01); *H01L 2224/05124* (2013.01); *H01L 2224/05686* (2013.01); *H01L 2224/13124* (2013.01); *H01L 2224/13144* (2013.01); *H01L 2224/13147* (2013.01); *H01L 2224/13164* (2013.01); *H01L 2224/13169* (2013.01); *H01L 2224/16227* (2013.01); *H01L 2224/16157* (2013.01); *H01L 2224/32157* (2013.01); *H01L 2224/32227* (2013.01); *H01L 2224/9211* (2013.01); *B81B 2207/098* (2013.01); ***H01L 24/05*** (2013.01)

(57) **ABSTRACT**

A sensor assembly includes a die substrate and a metalized layer formed on the die substrate. The metalized layer is formed of a first metal material and includes a bonding pad to facilitate electrically coupling the sensor assembly to a sensor system. A re-metalized bump is formed on the bonding pad of a second metal material and is electrically coupled to the metalized layer. An adhesive is applied to the re-metalized bump and facilitates mechanically coupling the sensor assembly to the sensor system.

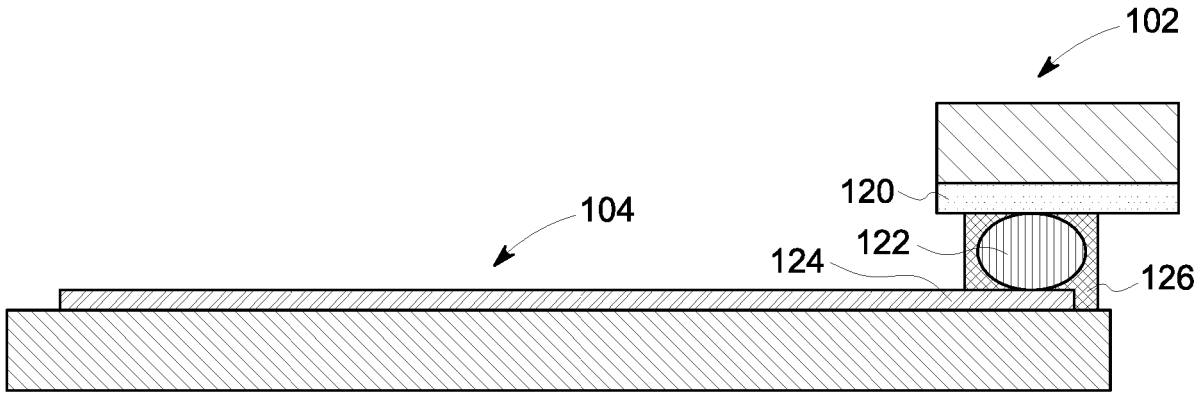

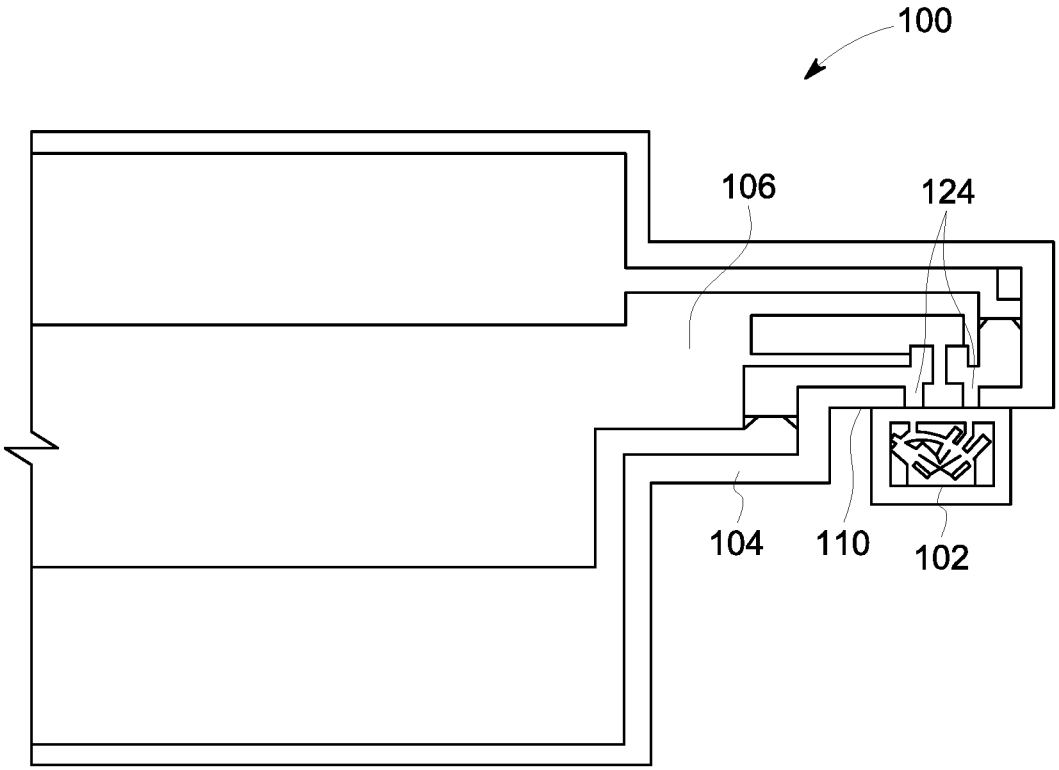

FIG. 1

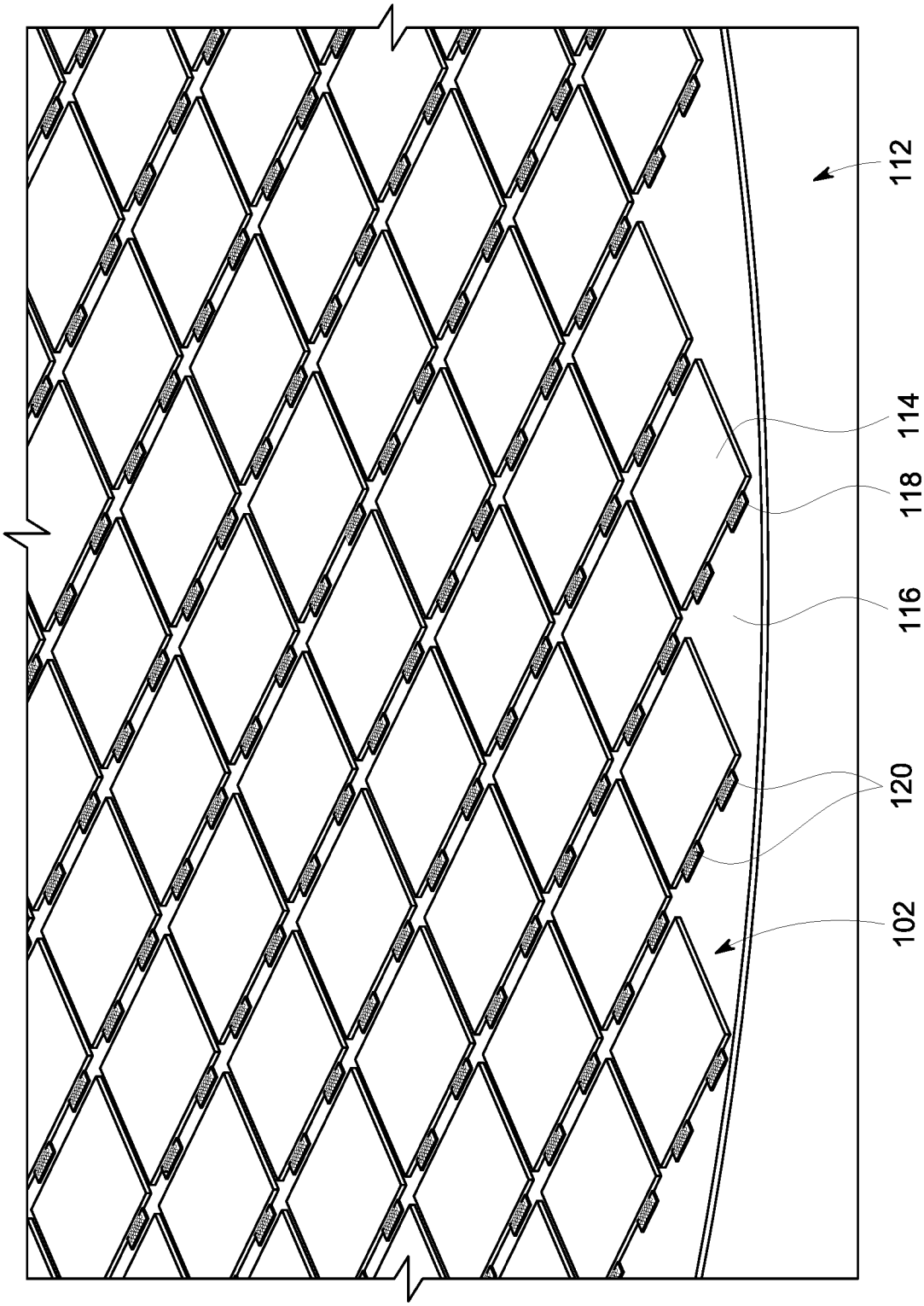

FIG. 2

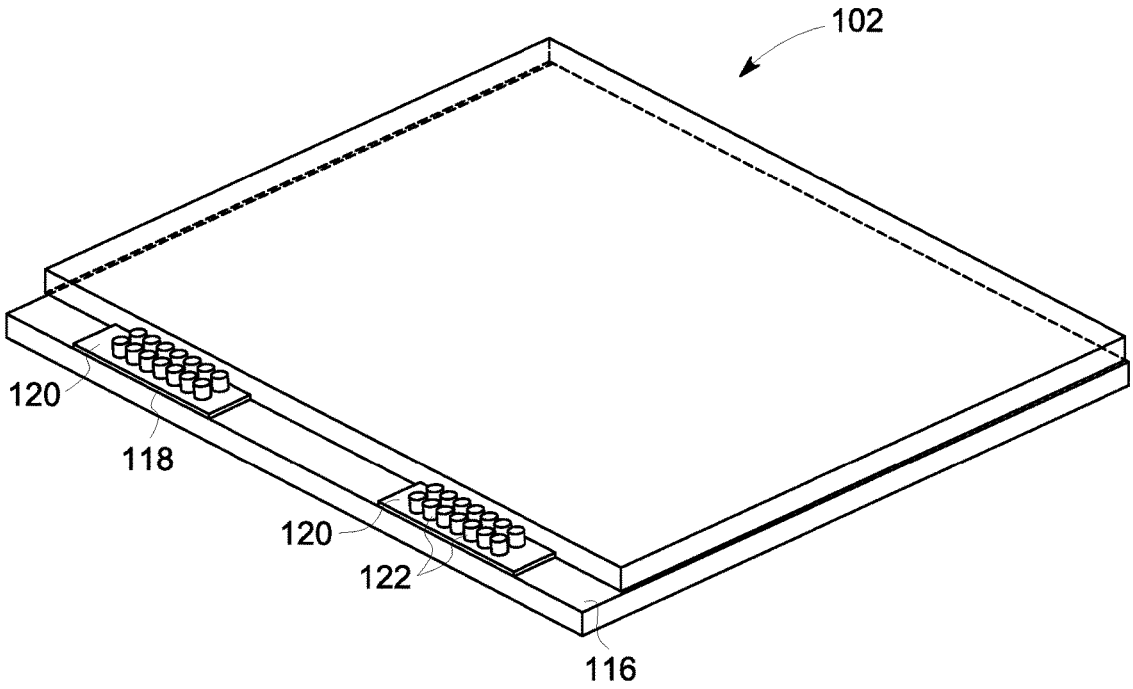

FIG. 3

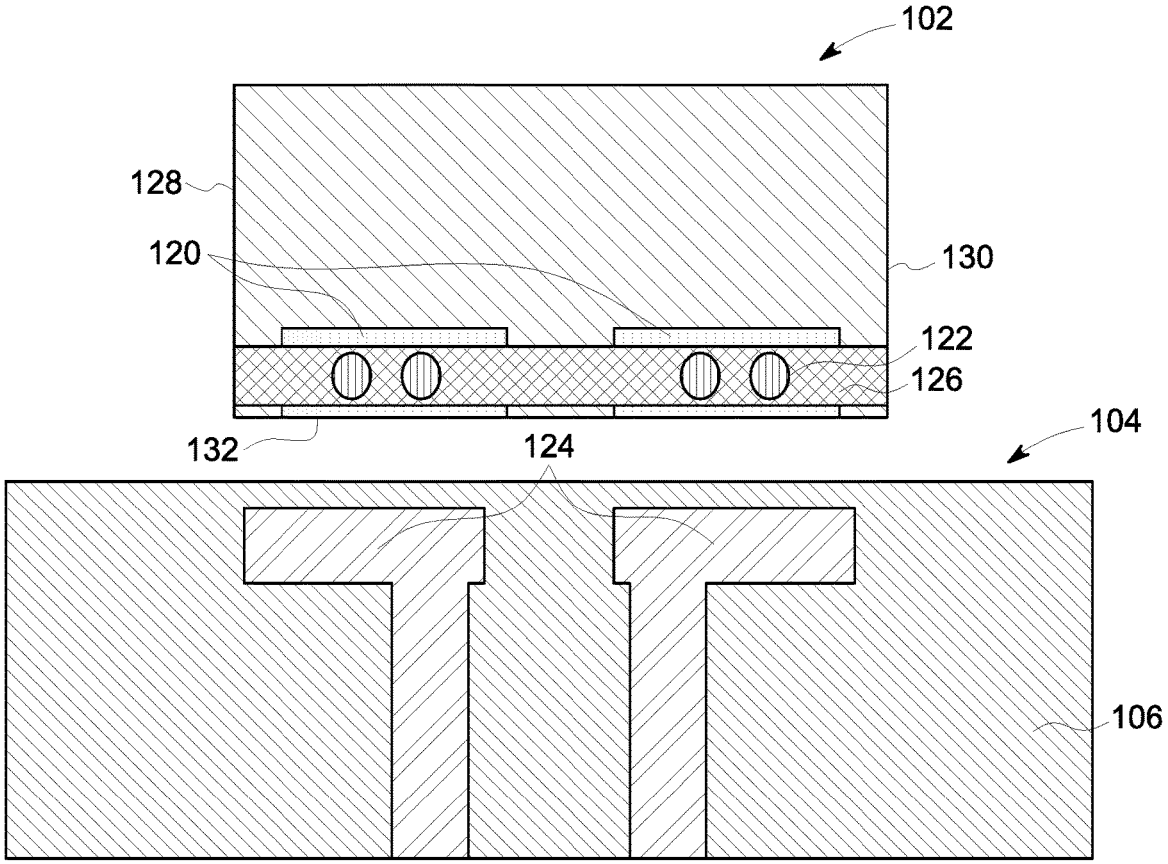

FIG. 4

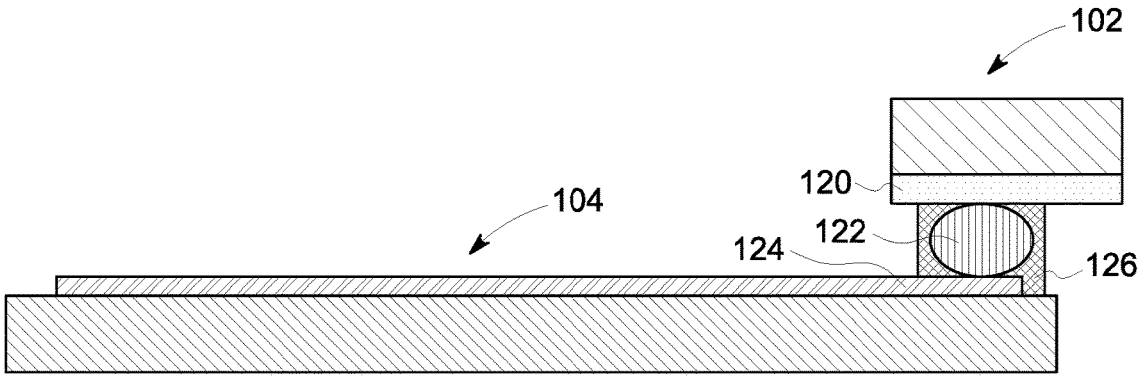

FIG. 5

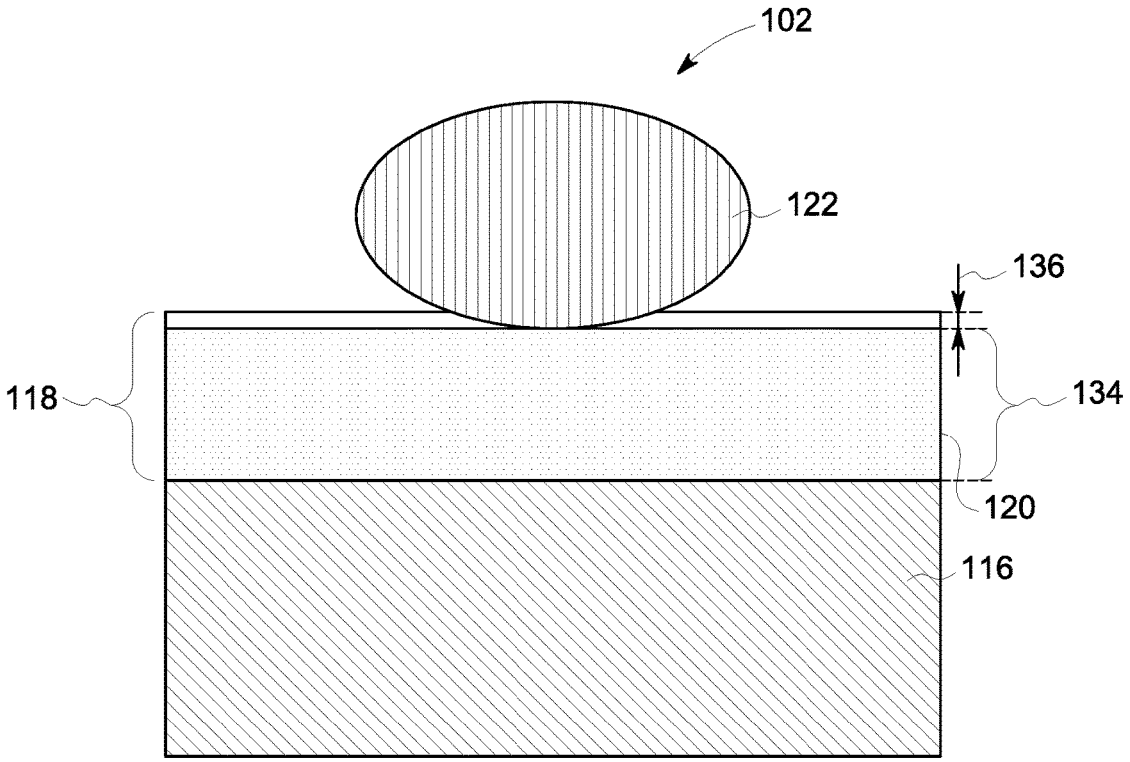

FIG. 6

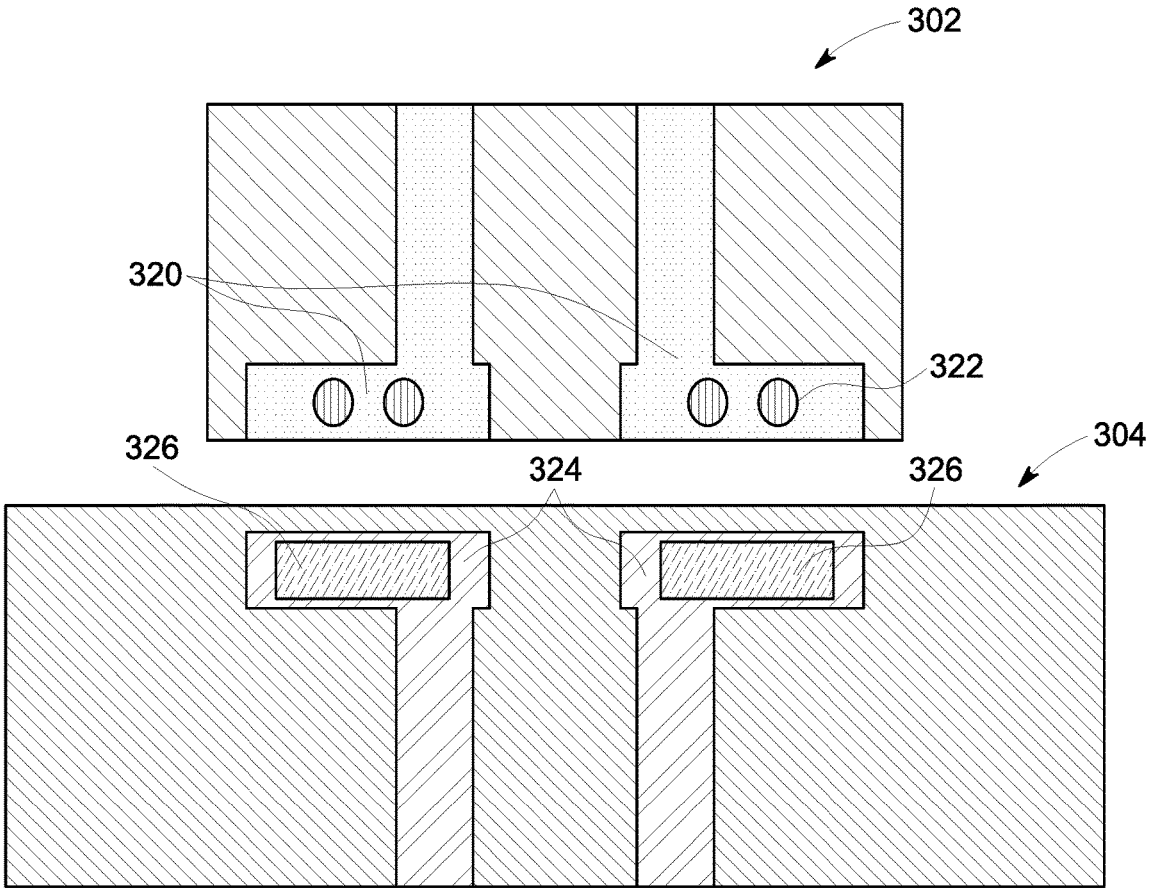

FIG. 7

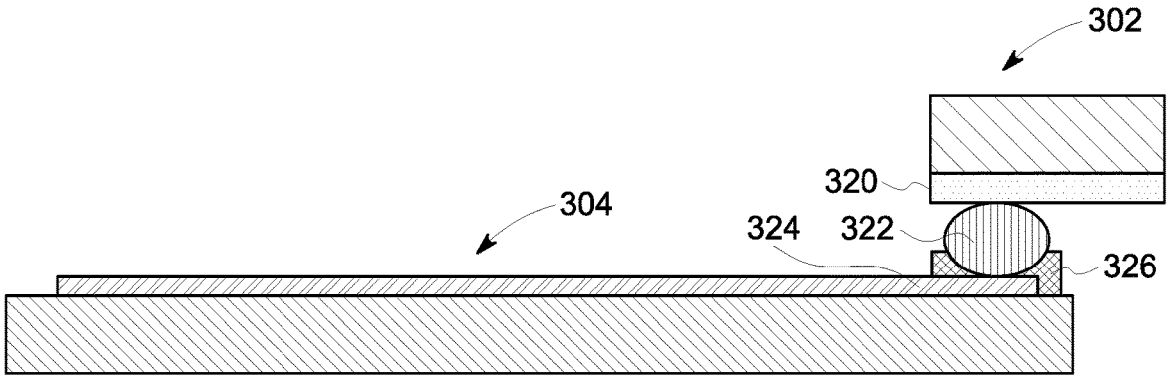

FIG. 8

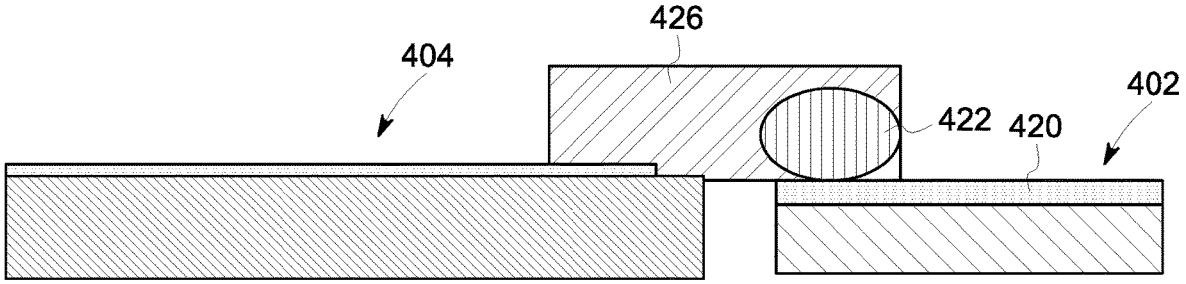

FIG. 9

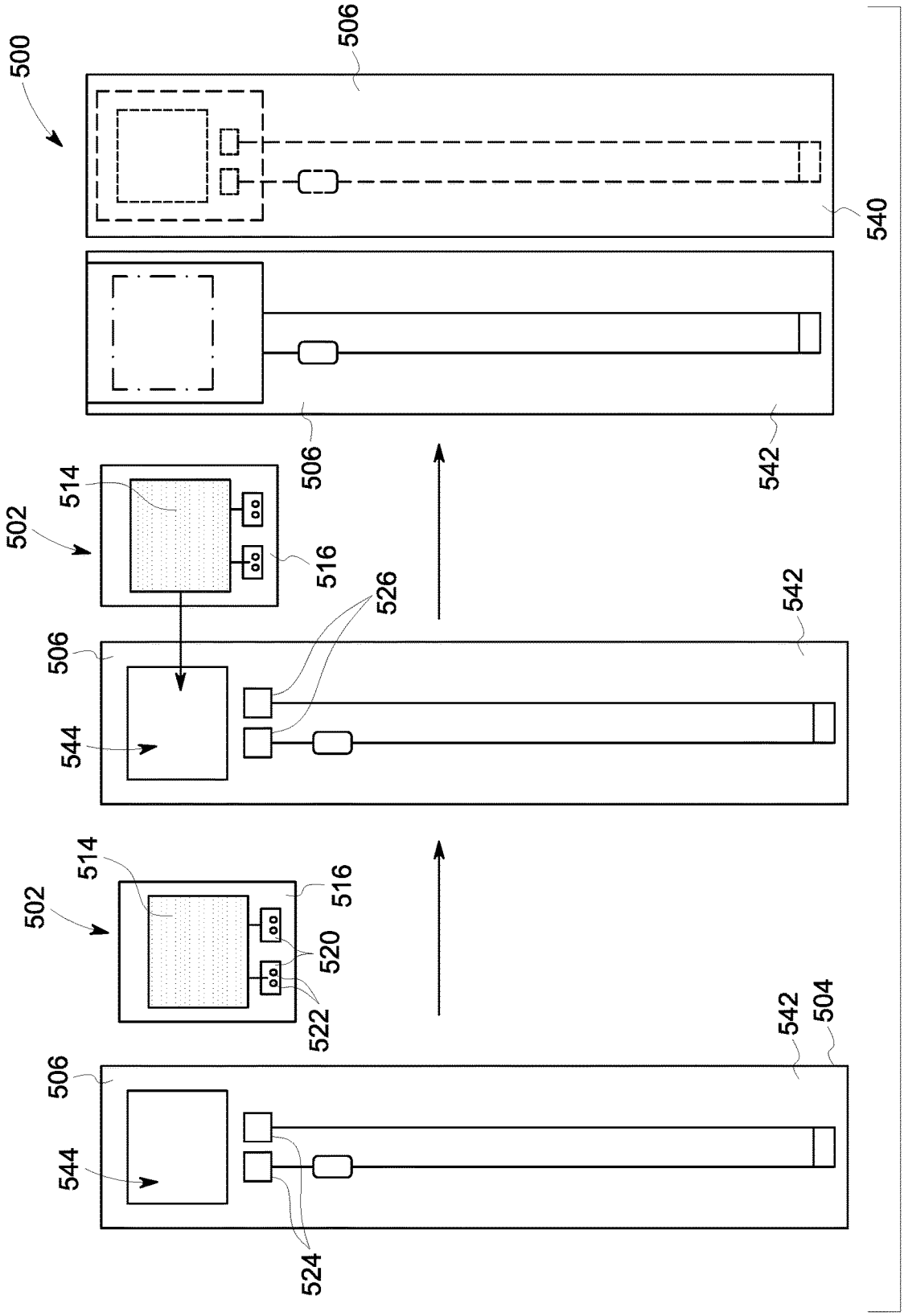
500
506
540
506
542
502
514
516
526
542
506
544
502
514
516
520
522
542
504
506
544
524

FIG. 10

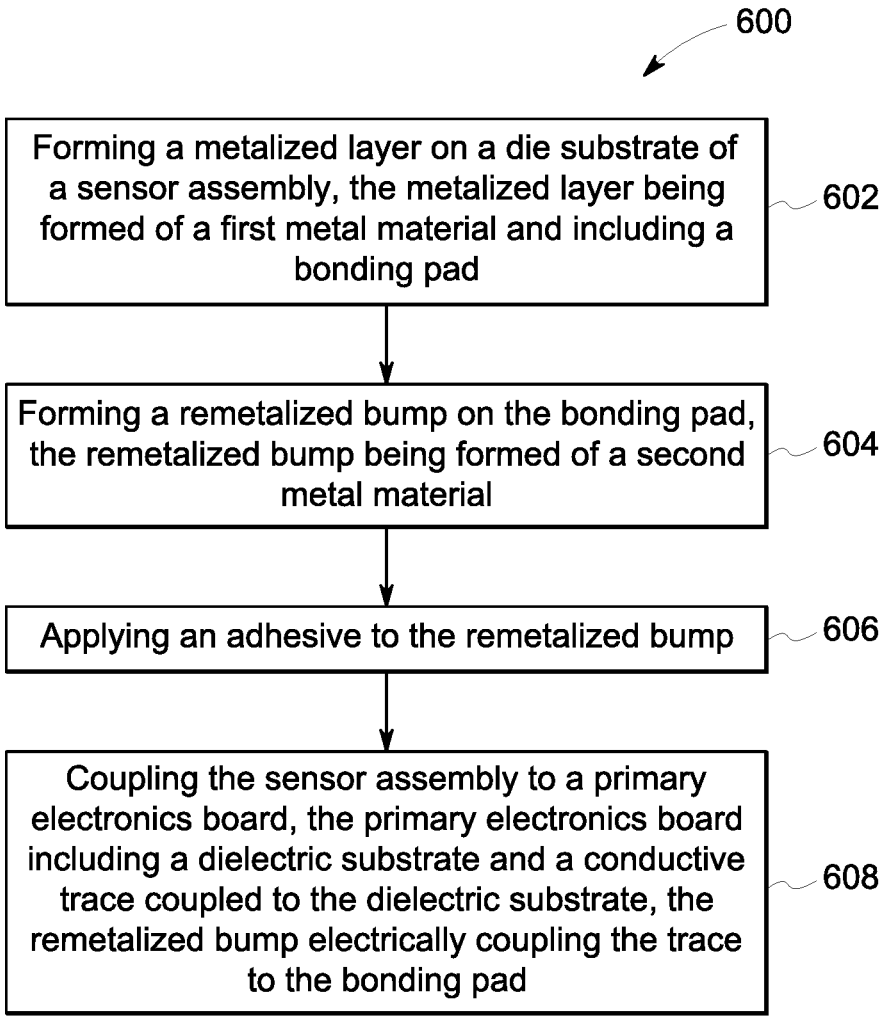
600
Forming a metalized layer on a die substrate of a sensor assembly, the metalized layer being formed of a first metal material and including a bonding pad
602
Forming a remetalized bump on the bonding pad, the remetalized bump being formed of a second metal material
604
Applying an adhesive to the remetalized bump
606
Coupling the sensor assembly to a primary electronics board, the primary electronics board including a dielectric substrate and a conductive trace coupled to the dielectric substrate, the remetalized bump electrically coupling the trace to the bonding pad
608

FIG. 11

SENSOR SYSTEMS AND METHODS FOR PROVIDING SENSOR SYSTEMS

STATEMENT REGARDING FEDERALLY SPONSORED RESEARCH & DEVELOPMENT

[0001] This invention was made with government support under U.S. Government Contract Number: FA8650-15-2-5401 awarded by the United States Air Force Research Laboratory. The government has certain rights in the invention.

BACKGROUND

[0002] The field of the disclosure relates generally to sensor systems and, more particularly, to sensor assemblies for use in sensor systems.

[0003] At least some known sensor systems include a sensor assembly electrically coupled to an electronics board (e.g., a circuit board which can be rigid or flexible). For example, at least some sensor assemblies are connected to an electronics board using a wire bond, in which a wire may be ultrasonically bonded to connectors on the sensor assembly and the electronics board. At least some such systems result in a loose wire extending between the sensor assemblies and the electronics boards. Thus, at least some known sensor systems increase the overall size of the interconnect to allow space for the loose wire used in the wire bond and, as a result, are not well suited for flat assembly applications where it may be desirable to have a relatively small interconnect. Moreover, it is generally difficult to secure such sensor assemblies to the electronics boards without disturbing the connection of the wire bond. In addition, inductance of the interconnect scales with changes in the length of a wire bond. As a result, shortened interconnections often result in lower inductance interconnects.

[0004] Furthermore, at least some known sensor systems include electronics boards having metal traces that are formed of a different metal material than the metal used in the corresponding sensor assemblies. For example, at least some known electronics boards include traces that are formed of a material having a high susceptibility to galvanic corrosion when in contact with the corresponding metal used in sensor assemblies. As a result, at least some known sensor systems are susceptible to degradation at the interconnects between sensor assemblies and electronics boards.

[0005] Accordingly, it would be desirable to provide a sensor system that allows for simpler, more robust, and more durable connection between the sensor assembly and an electronics board.

BRIEF DESCRIPTION

[0006] In one aspect, a sensor assembly is provided. The sensor assembly includes a die substrate and a metalized layer formed on the die substrate. The metalized layer is formed of a first metal material and includes a bonding pad to facilitate electrically coupling the sensor assembly to a sensor system. A re-metalized bump is formed on the bonding pad of a second metal material and is electrically coupled to the metalized layer. An adhesive is applied to the re-metalized bump and facilitates mechanically coupling the sensor assembly to the sensor system.

[0007] In another aspect, a sensor system is provided. The sensor system includes an electronics board including a dielectric substrate and a conductive trace coupled to the dielectric substrate. A sensor assembly is coupled to the electronics board, and includes a die substrate and a metalized layer formed on the die substrate. The metalized layer is formed of a first metal material and includes a bonding pad to facilitate electrically coupling the sensor assembly to the trace. A re-metalized bump is formed on the bonding pad of a second metal material and electrically couples the bonding pad to the trace. An adhesive is applied to the re-metalized bump and facilitates mechanically coupling the sensor assembly to the electronics board.

[0008] In another aspect, a method of assembling a sensor system is provided. The method includes forming a metalized layer on a die substrate of a sensor assembly. The metalized layer is formed of a first metal material and includes a bonding pad. The method further includes forming a remetalized bump on the bonding pad, the remetalized bump being formed of a second metal material. The method also includes applying an adhesive to the remetalized bump and coupling the sensor assembly to an electronics board. The electronics board includes a dielectric substrate and a conductive trace coupled to the dielectric substrate. The remetalized bump electrically couples the trace to the bonding pad.

DRAWINGS

[0009] These and other features, aspects, and advantages of the present disclosure will become better understood when the following detailed description is read with reference to the accompanying drawings in which like characters represent like parts throughout the drawings, wherein:

[0010] FIG. **1** is a schematic view of an exemplary sensor system including a sensor assembly coupled to an electronics board;

[0011] FIG. **2** is a schematic, perspective view of a portion of an exemplary wafer assembly including a plurality of sensor assemblies for use in the sensor system shown in FIG. **1**;

[0012] FIG. **3** is schematic, perspective view of an exemplary sensor assembly for use in the sensor system shown in FIG. **1**;

[0013] FIG. **4** is a schematic, top view of a portion of an exemplary sensor assembly and electronics board for use in the sensor system shown in FIG. **1**;

[0014] FIG. **5** is a schematic, sectional view of the sensor assembly and electronics board shown in FIG. **4**;

[0015] FIG. **6** is a schematic, enlarged view of a portion of the sensor assembly shown in FIG. **5**;

[0016] FIG. **7** is a schematic, top view of an alternative sensor assembly and electronics board for use in the sensor system shown in FIG. **1**;

[0017] FIG. **8** is a schematic, sectional view of the sensor assembly and electronics board shown in FIG. **7**;

[0018] FIG. **9** is a schematic, sectional view of another alternative sensor assembly and electronics board for use in the sensor system shown in FIG. **1**;

[0019] FIG. **10** is a flow diagram of an exemplary production system for assembling an alternative sensor system; and

[0020] FIG. **11** is a flow diagram of an exemplary method of assembling the sensor system shown in FIG. **1**.

[0021] Unless otherwise indicated, the drawings provided herein are meant to illustrate features of embodiments of this disclosure. These features are believed to be applicable in a wide variety of systems comprising one or more embodi-

ments of this disclosure. As such, the drawings are not meant to include all conventional features known by those of ordinary skill in the art to be required for the practice of the embodiments disclosed herein.

DETAILED DESCRIPTION

[0022] In the following specification and the claims, reference will be made to a number of terms, which shall be defined to have the following meanings.

[0023] The singular forms "a", "an", and "the" include plural references unless the context clearly dictates otherwise.

[0024] "Optional" or "optionally" means that the subsequently described event or circumstance may or may not occur, and that the description includes instances where the event occurs and instances where it does not.

[0025] Approximating language, as used herein throughout the specification and claims, may be applied to modify any quantitative representation that could permissibly vary without resulting in a change in the basic function to which it is related. Accordingly, a value modified by a term or terms, such as "about", "approximately", and "substantially", are not to be limited to the precise value specified. In at least some instances, the approximating language may correspond to the precision of an instrument for measuring the value. Here and throughout the specification and claims, range limitations may be combined and/or interchanged, such ranges are identified and include all the sub-ranges contained therein unless context or language indicates otherwise.

[0026] Embodiments described herein relate to sensor systems, sensor assemblies for sensor systems, and methods of assembling sensor systems. The sensor system includes an electronics board including a dielectric substrate and a trace. A sensor assembly is coupled to the electronics board and includes a die substrate and a metalized layer formed of a first metal material and including a bonding pad. A re-metalized bump is formed on the bonding pad of a second metal material and electrically couples the bonding pad to the trace and an adhesive is applied to the re-metalized bump to facilitate mechanically coupling the sensor assembly to the sensor system. As a result, the sensor systems described herein provide for stronger more durable interconnects (e.g., in extreme temperatures and humidity) between sensor assemblies and electronics boards. In addition, the sensor systems described herein allow for reduced spatial requirements for electrically coupling the sensor assemblies to the electronics boards.

[0027] FIG. **1** is a schematic view of an exemplary sensor system **100** including a sensor assembly **102** coupled to an electronics board **104**. In the exemplary embodiment, electronics board **104** includes a dielectric substrate **106** and conductive traces **124**. In the exemplary embodiment dielectric substrate **106** is a flexible substrate. In alternative embodiments, dielectric substrate **106** is formed of any material that enables sensor system **100** to function as described herein.

[0028] In the exemplary embodiment, sensor assembly **102** is electrically coupled to electronics board **104** to facilitate electrical communication between sensor assembly **102** and various electronics (not shown) of electronics board **104**. Sensor assembly **102** is also mechanically coupled to electronics board **104** at a side edge **110** of electronics board **104**. In particular, and as described in greater detail below, in the exemplary embodiment sensor assembly **102** is adhered to electronics board **104**. In an alternative embodiment, sensor assembly **102** is mechanically coupled to electronics board **104** in any manner that enables sensor system **100** to function as described herein. For example, and without limitation, in some alternative embodiments electronics board **104** defines an aperture **544** (e.g., as shown in FIG. **10**) and sensor assembly **102** is coupled to electronics board **104** such that sensor assembly **102** is at least partially received within aperture **544**.

[0029] FIG. **2** is a schematic, perspective view of a portion of an exemplary wafer assembly **112** including a plurality of sensor assemblies **102** for use in sensor system **100** shown in FIG. **1**. FIG. **3** is a schematic, perspective view of an exemplary sensor assembly **102** for use in sensor system **100** shown in FIG. **1**. Referring to FIG. **2**, in the exemplary embodiment, sensor assemblies **102** each include a lid **114** coupled to a die substrate **116**, and a metalized layer **118** formed on die substrate **116**. Metalized layer **118** includes a pair of bonding pads **120**, exposed by lids **114** and coupled to die substrate **116**. More specifically, during production of wafer assembly **112**, after formation of die substrate **116**, a metallization process is performed to deposit metalized layer **118** on die substrate **116**. In the exemplary embodiment, metalized layer **118** extends from bonding pads **120** and under lid **114** such that lid **114** substantially covers metalized layer **118** while exposing bonding pads **120**. In alternative embodiments, sensor assemblies **102** do not include lids **114**.

[0030] Referring to FIG. **3**, in the exemplary embodiment, wafer assembly **112** (shown in FIG. **2**) undergoes a singulation process (i.e., dicing of wafer assembly **112**) to form individual sensor assemblies, for example sensor assembly **102**. In the exemplary embodiment, once singulated, metalized layer **118** and die substrate **116** form a microelectromechanical system (MEMS) sensor. More specifically, in the exemplary embodiment, sensor assembly **102** is a surface acoustic wave (SAW) sensor and, in particular, an all-quartz-package sensor, i.e., a sensor sealed between a quartz substrate and a second quartz layer. In alternative embodiments, die substrate **116** is formed of any material that enables sensor assembly **102** to function as described herein. For example, and without limitation, in some alternative embodiments, die substrate **116** is formed of silicon. In the exemplary embodiment, sensor assembly **102** includes a piezoelectric substrate (not shown), a first interdigitated transducer (IDT) (not shown) coupled to the piezoelectric substrate, and a second IDT (not shown) coupled to the piezoelectric substrate and separated from the first IDT by a delay line region (not shown). The first IDT receives an electrical input signal and produces an acoustic wave, e.g., a surface mechanical wave. The second IDT converts the acoustic wave to an electrical output signal through the piezoelectric effect. In alternative embodiments, sensor assembly **102** is any microelectromechanical system (MEMS) sensor that enables sensor system **100**, shown in FIG. **1**, to function as described herein.

[0031] In the exemplary embodiment, a plurality of remetalized bumps **122** are formed on each bonding pad **120** of sensor assembly **102**. Remetalized bumps **122** are fixedly coupled to bonding pads **120** and extend outward therefrom. As described in greater detail below, remetalized bumps **122** facilitate electrical flow from metalized layer **118** and, more specifically, bonding pads **120**, through remetalized bumps **122**. In the exemplary embodiment, remetalized bumps **122**

extend substantially the same height from bonding pads **120** to provide a consistent bondline thickness when sensor assembly **102** is coupled to electronics board **104** (shown in FIG. **1**). In the exemplary embodiment, fourteen remetalized bumps **122** are formed on each bonding pad **120**, positioned in two linearly extending rows of seven remetalized bumps **122**. In alternative embodiments, any number of remetalized bumps **122** are formed on bonding pads **120** that enables sensor assembly **102** to function as described herein. For example, and without limitation, in some alternative embodiments, a single remetalized bump **122** is formed on each bonding pad **120**.

[0032] In the exemplary embodiment, remetalized bumps **122** are formed on bonding pads **120** prior to singulation of wafer assembly **112**, shown in FIG. **2**, into individual sensor assemblies **102**, as shown in FIG. **3**. More specifically, remetalized bumps **122** are deposited on bonding pads **120** according to a similar metallization process used to deposit metalized layer **118** on die substrate **116**, such as, for example and without limitation, studbumping, use of a wedge wirebonder, electrolytic deposition, electroless deposition, and conductive ball deposition. In alternative embodiments, remetalized bumps **122** are formed on bonding pads **120** subsequent to singulation of wafer assembly **112**, shown in FIG. **2**. In yet further alternative embodiments, remetalized bumps **122** are formed on bonding pads **120** in any manner that enables remetalized bumps **122** to function as described herein. For example, and without limitation, in some alternative embodiments, remetalized bumps **122** are formed by depositing carbon ink on bonding pads **120**.

[0033] In the exemplary embodiment, remetalized bumps **122** are substantially cylindrical and extend transversely from bonding pads **120**. More specifically, in the exemplary embodiment, remetalized bumps **122** extend between 25 microns to 200 microns in height from bonding pads **120**. In alternative embodiments, remetalized bumps **122** are sized and shaped in any manner that enables remetalized bumps **122** to function as described herein. For example, and without limitation, in some alternative embodiments, remetalized bumps **122** each include a plurality of remetalized bumps **122** vertically stacked on one another.

[0034] FIG. **4** is a schematic, top view of a portion of an exemplary sensor assembly **102** and electronics board **104** for use in sensor system **100** shown in FIG. **1**. FIG. **5** is a schematic, sectional view of sensor assembly **102** and electronics board **104** shown in FIG. **4**. In the exemplary embodiment, sensor assembly **102** is substantially the same as sensor assembly **102** described above with respect to FIG. **3** other than, in the exemplary embodiment, sensor assembly **102** includes two remetalized bumps **122** formed on each bonding pad **120**.

[0035] Referring to FIG. **4**, in the exemplary embodiment, traces **124** of electronics board **104** include two traces **124** corresponding to the two bonding pads **120** of sensor assembly **102**. In the exemplary embodiment, traces **124** are each formed of silver. In particular, traces **124** are formed by printing silver onto dielectric substrate **106** in an additive manufacturing process. In alternative embodiments, traces **124** are formed of any material that enables electronics board **104** to function as described herein. For example, and without limitation, in some alternative embodiments, traces **124** are etched from a blanket of copper deposited on dielectric substrate **106** (i.e., by a subtractive manufacturing process). In alternative embodiments, traces **124** include bumps, similar to remetalized bumps **122** on bonding pad **120** to facilitate electrically coupling sensor assembly **102** to electronics board **104**.

[0036] In the exemplary embodiment, sensor assembly **102** is decoupled and spaced from electronics board **104**. Sensor assembly **102** is configured to be coupled to electronics board **104** (e.g., as shown in FIG. **5**) by flipping sensor assembly **102** (i.e., rotating sensor assembly **102** approximately 180 degrees from the illustrated orientation) and aligning bonding pads **120** with traces **124** such that bonding pads **120** and traces **124** are in a face-to-face orientation relative to one another. In particular, in the exemplary embodiment, bonding pads **120** are sized and spaced in correspondence with traces **124** to facilitate alignment of each bonding pad **120** with each respective trace **124** when sensor assembly **102** is coupled to electronics board **104**.

[0037] In the exemplary embodiment, an adhesive **126** is applied on sensor assembly **102** prior to coupling sensor assembly **102** to electronics board **104**. In the exemplary embodiment, adhesive **126** is a non-conductive adhesive. As used herein, the term "non-conductive adhesive" refers to an adhesive that does not include a sufficient density of conductive materials to permit electrical connection through adhesive **126** alone. For example, in the exemplary embodiment, adhesive **126** is an anisotropic conductive film having less than 20% by volume of conductive fillers. In alternative embodiments, adhesive **126** is any adhesive that enables sensor system **100**, shown in FIG. **1** to function as described herein. For example, and without limitation, in some embodiments, adhesive **126** is an anisotropic conductive film or paste containing a filler material, such as one of solder, carbon, nickel, and gold particles. In further alternative embodiments, adhesive **126** is a non-conductive film, paste, or liquid that is capable of adhering trace **124** and remetalized bump **122** into contact.

[0038] In the exemplary embodiment, adhesive **126** is applied on remetalized bumps **122** and extends between a first side **128** and a second side **130** of sensor assembly **102**. Referring to FIG. **5**, when coupled, adhesive **126** is in contact with, and extends between, sensor assembly **102** and electronics board **104**. More specifically, in the exemplary embodiment, adhesive **126** is in contact with, and extends between bonding pad **120** and trace **124**. Referring back to FIG. **4**, adhesive **126** allows for mechanical coupling between sensor assembly **102** and electronics board **104** along the entire length of a front edge **132** of sensor assembly **102** (e.g., between traces **124** when sensor assembly **102** is coupled to electronics board **104**) while electrically coupling sensor assembly **102** and electronics board **104** at bonding pads **120** and traces **124**. In alternative embodiments, adhesive **126** is applied along only a portion of front edge **132** of sensor assembly **102**.

[0039] FIG. **6** is a schematic, enlarged view of a portion of sensor assembly **102** shown in FIG. **5**. In the exemplary embodiment, metalized layer **118**, or more specifically, bonding pad **120**, is formed on die substrate **116**. Metalized layer **118** is formed of a first metal material **134** configured to facilitate operation of sensor assembly **102**. More specifically, in the exemplary embodiment, first metal material **134** is formed of aluminum. In alternative embodiments, metalized layer **118** is formed of any material that enables sensor assembly **102** to function as described herein. In the exemplary embodiment, metalized layer **118** includes a thin

oxidized surface layer **136** covering first metal material **134**. For example, and without limitation, in the exemplary embodiment, oxidized surface layer **136** is formed of an aluminum oxide. First metal material **134** is substantially conductive and oxidized surface layer **136** is substantially non-conductive.

[0040] In the exemplary embodiment, remetalized bump **122** extends from first metal material **134** through and beyond oxidized surface layer **136**. More specifically, remetalized bump **122** is, at least partially, in contact with first metal material **134** to facilitate current flow between remetalized bump **122** and first metal material **134** of metalized layer **118**. During assembly of sensor assembly **102**, remetalized bump **122** is formed on bonding pad **120** such that remetalized bump **122** penetrates oxidized surface layer **136** and contacts first metal material **134**. In alternative embodiments, at least a portion of oxidized surface layer **136** is removed prior to forming remetalized bump **122** on bonding pad **120**.

[0041] In the exemplary embodiment, remetalized bump **122** is formed of a second metal material. In the exemplary embodiment, the second metal material is gold. In alternative embodiments, the second metal material is any material that enables remetalized bump **122** to function as described herein. For example, and without limitation, in some alternative embodiments, the second metal material is formed, at least in part, of one of gold, copper, palladium, or platinum. In further alternative embodiments, remetalized bump **122** is formed of the same material as metalized layer **118**. For example, in some alternative embodiments, remetalized bump **122** is formed of aluminum.

[0042] Referring back to FIG. **5**, in the exemplary embodiment, the second metal material is compatible to interconnect with bonding pad **120** and trace **124**. For example, and without limitation, in the exemplary embodiment, trace **124** is formed of silver and first metal material **134** is formed of aluminum. As a result, a direct connection between trace **124** and first metal material **134** is highly susceptible to galvanic corrosion from current flow. In the exemplary embodiment, the second metal material (e.g., gold, copper, palladium, platinum) has a low susceptibility to galvanic corrosion with first metal material **134** (e.g., aluminum) and trace **124** (e.g., silver). Moreover, in the exemplary embodiment, forming remetalized bump **122** of the second metal material allows for low contact resistance between remetalized bump **122** and first metal material **134**, shown in FIG. **6**.

[0043] FIG. **7** is a schematic, top view of an alternative sensor assembly **302** and electronics board **304** for use in sensor system **100** shown in FIG. **1**. FIG. **8** is a schematic, sectional view of sensor assembly **302** and electronics board **304** shown in FIG. **7**. In the exemplary embodiment, sensor assembly **302** and electronics board **304** are substantially the same as sensor assembly **102** and electronics board **104** described above with respect to FIGS. **1-6**, except as described below.

[0044] Referring to FIG. **7**, in the exemplary embodiment, an adhesive **326** is applied on electronics board **304** prior to coupling sensor assembly **302** to electronics board **304**. In the exemplary embodiment, adhesive **326** is a conductive adhesive. In other words, in the exemplary embodiment, conductive fillers, such as, for example, and without limitation, silver, nickel, copper, or graphite account for at least 20% of the volume of adhesive **326**. More specifically, in the exemplary embodiment, adhesive includes between 40-95% conductive fillers by volume.

[0045] In the exemplary embodiment, prior to coupling sensor assembly **302** to electronics board **304**, adhesive **326** is applied on each trace **324** on electronics board **304**. Adhesive **326** allows for mechanical coupling between sensor assembly **302** and electronics board **304** at bonding pads **320** of sensor assembly **302** and traces **324** of electronics board **304** while electrically coupling sensor assembly **302** and electronics board **304** at bonding pads **320** and traces **324**. Referring to FIG. **8**, when coupled, adhesive **326** is in contact with, and extends between, electronics board **304** and remetalized bump **322** but does not contact bonding pad **320**. At least in part due to adhesive **326** being out of contact with bonding pad **320** during operation, current flow between sensor assembly **302** and electronics board **304** is directed through remetalized bump **322**. In alternative embodiments, adhesive **326** is applied in any manner that enables sensor system **300** to function as described herein.

[0046] FIG. **9** is a schematic, sectional view of another alternative sensor assembly **402** and electronics board **404** for use in sensor system **100** shown in FIG. **1**. In the exemplary embodiment, sensor assembly **402** and electronics board **404** are substantially the same as sensor assembly **302** and electronics board **304** described above with respect to FIGS. **7** and **8**, except as described below.

[0047] In the exemplary embodiment, electronics board **404** and sensor assembly **402** are mechanically coupled together using an adhesive **426**. More specifically, in the exemplary embodiment, adhesive **426** is a conductive adhesive similar to adhesive **326**, described above with respect to FIGS. **7** and **8**. In the exemplary embodiment, sensor assembly **402** is coupled to electronics board **404** by positioning bonding pads **420** adjacent to traces **424** and applying an adhesive to extend transversely between traces **424** and bonding pad **420** to surround remetalized bump **422**. In other words, unlike the embodiments described above with respect to FIGS. **1-8**, in the exemplary embodiment, it is not necessary to orient traces **424** and bonding pads **420** to be in a face-to-face relationship when coupled.

[0048] FIG. **10** is a flow diagram of an exemplary production method for assembling an alternative sensor system **500**. In the exemplary embodiment, sensor system **500** includes an electronics board **504** including a dielectric substrate **506**. Dielectric substrate **506** extends between a top face **540**, or more broadly, a first face, and a bottom face **542**, or more broadly a second face, opposite top face **540**. Dielectric substrate **506** defines an aperture **544** extending between top face **540** and bottom face **542**. In particular, during production, aperture **544** is cut from dielectric substrate **506** such that aperture **544** is sized to receive a lid **514** of sensor assembly **502** therethrough.

[0049] In the exemplary embodiment, electronics board **504** includes traces **524** on bottom face **542** of dielectric substrate **506**. Bonding pads **520** of sensor assembly **502** have remetalized bumps **522** formed thereon and configured to contact traces **524** when sensor assembly **502** is coupled to electronics board **504**. During assembly, prior to bonding sensor assembly **502** to electronics board **504**, remetalized bumps **522** are applied to bonding pads **520** and sensor assembly **502** is singulated from wafer assembly **112**, shown in FIG. **2**. In alternative embodiments, sensor assembly **502** is bonded to electronics board **504** prior to singulation. An

adhesive (not shown) similar to adhesive **126**, shown in FIGS. **4-6** or adhesive **326** shown in FIGS. **7-9** is applied to at least one of sensor assembly **502** and electronics board **504**. More specifically, in the exemplary embodiment, a non-conductive adhesive (similar to adhesive **126**, shown in FIGS. **4-6**) is applied around the perimeter of die substrate **516** of sensor assembly **502**.

[0050] In the exemplary embodiment, aperture **544** acts as an alignment guide to facilitate high speed alignment and attachment of remetalized bumps **522** with traces **524**. More specifically, in the exemplary embodiment, to align remetalized bumps **522** with traces **524**, sensor assembly **502** is flipped (i.e., rotated 180 degrees) such that bonding pads **520** are oriented in a face-to-face relationship with traces **524** and such that lid **514** is aligned with aperture **544**. Traces **524** are positioned on dielectric substrate **506** such that aligning lid **514** with aperture **544** also aligns traces **524** with bonding pads **520**. Sensor assembly **502** is then coupled to electronics board **504** with lid **514** extending through aperture **544** to top face **540** of dielectric substrate **506** and remetalized bumps **522** in contact with traces **524** on bottom face **542** of dielectric substrate. In the exemplary embodiment, sensor assembly **502** is bonded to electronics board **504** by a roll-to-roll manufacturing process. In alternative embodiment, sensor assembly **502** is bonded to electronics board by any process that enables sensor system **500** to function as described herein.

[0051] FIG. **11** is a flow diagram of an exemplary method **600** of assembling a sensor system (e.g., sensor system **100** shown in FIG. **1**). Method **600** includes forming **602** a metalized layer (e.g., metalized layer **118** shown in FIG. **6**) on a die substrate (e.g., die substrate **116** shown in FIG. **6**) of a sensor assembly (e.g., sensor assembly **102** shown in FIG. **3**), the metalized layer being formed of a first metal material (e.g., first metal material **134** shown in FIG. **6**) and including a bonding pad (e.g., bonding pad **120** shown in FIG. **3**). Method **600** further includes forming **604** a remetalized bump (e.g., remetalized bump **122** shown in FIG. **3**) on the bonding pad, the remetalized bump being formed of a second metal material. Method **600** further includes applying **606** an adhesive (e.g., adhesive **126** shown in FIG. **4**) to the remetalized bump. Method **600** also includes coupling **608** the sensor assembly to an electronics board, the electronics board including a dielectric substrate (e.g., dielectric substrate **106** shown in FIG. **4**) and a trace (e.g., trace **124** shown in FIG. **4**) coupled to the dielectric substrate, the remetalized bump electrically coupling the trace to the bonding pad.

[0052] An exemplary technical effect of the methods, systems, and apparatus described herein includes at least one of: (a) improved strength in mechanical coupling between sensor assemblies and electronics boards; (b) reduced spatial requirements for interconnects of sensor assemblies and electronics boards; (c) improved lifespan of sensor assemblies; (d) reduced assembly time required for bonding sensor assemblies and electronics boards; and (e) reduced inductance interconnects.

[0053] Exemplary embodiments of antenna arrays, antenna systems, and methods for assembling antenna arrays, are described above in detail. The methods and systems are not limited to the specific embodiments described herein, but rather, components of systems and/or steps of the methods may be utilized independently and separately from other components and/or steps described herein. For example, the method may also be used in combination with other antenna arrays and/or antenna systems, and are not limited to practice only with the antenna arrays and antenna systems as described herein. Rather, the exemplary embodiment can be implemented and utilized in connection with many other antenna system applications.

[0054] Although specific features of various embodiments of the disclosure may be shown in some drawings and not in others, this is for convenience only. In accordance with the principles of the disclosure, any feature of a drawing may be referenced and/or claimed in combination with any feature of any other drawing.

[0055] This written description uses examples to disclose the embodiments, including the best mode, and also to enable any person skilled in the art to practice the embodiments, including making and using any devices or systems and performing any incorporated methods. The patentable scope of the disclosure is defined by the claims, and may include other examples that occur to those skilled in the art. Such other examples are intended to be within the scope of the claims if they have structural elements that do not differ from the literal language of the claims, or if they include equivalent structural elements with insubstantial differences from the literal language of the claims.

What is claimed is:

1. A sensor assembly comprising:

a die substrate;

a metalized layer formed on said die substrate, said metalized layer formed of a first metal material and comprising a bonding pad to facilitate electrically coupling said sensor assembly to a sensor system;

a re-metalized bump formed on said bonding pad, said re-metalized bump formed of a second metal material and electrically coupled to said metalized layer; and

an adhesive applied to said re-metalized bump, wherein said adhesive facilitates mechanically coupling said sensor assembly to the sensor system.

2. The sensor assembly of claim **1**, wherein said adhesive comprises at least one of a non-conductive adhesive and an anisotropic conductive adhesive layer, said adhesive formed of at least one of a film, a liquid, and a paste.

3. The sensor assembly of claim **1**, wherein said adhesive comprises a conductive adhesive.

4. The sensor assembly of claim **1** further comprising a lid coupled to said die substrate, said lid substantially covering said die substrate and exposing said bonding pad.

5. The sensor assembly of claim **1**, wherein said metalized layer comprises an oxidized surface layer covering the first metal material, and wherein said re-metalized bump extends from the first metal material through the oxidized surface layer.

6. The sensor assembly of claim **1**, wherein the first metal material is aluminum, and wherein the second metal material is at least one of aluminum, gold, copper, palladium, and platinum.

7. The sensor assembly of claim **1**, wherein said die substrate comprises a piezoelectric material.

8. The sensor assembly of claim **1**, wherein said die substrate and said metalized layer form a surface acoustic wave (SAW) device.

9. A sensor system comprising:

an electronics board comprising a dielectric substrate and a conductive trace coupled to said dielectric substrate; and

a sensor assembly coupled to said electronics board, said sensor assembly comprising:

a die substrate;

a metalized layer formed on said die substrate of a first metal material, said metalized layer comprising a bonding pad to facilitate electrically coupling said sensor assembly to said trace;

a re-metalized bump formed on said bonding pad of a second metal material, said re-metalized bump electrically coupling said bonding pad to said trace; and

an adhesive applied to said re-metalized bump, wherein said adhesive facilitates mechanically coupling said sensor assembly to said electronics board.

10. The sensor system of claim **9**, wherein said adhesive comprises at least one of a non-conductive adhesive and an anisotropic conductive adhesive layer, said adhesive formed of at least one of a film, a liquid, and a paste.

11. The sensor system of claim **9**, wherein said adhesive comprises a conductive adhesive.

12. The sensor system of claim **9** further comprising an additional remetalized bump formed on said conductive trace, said additional remetalized bump configured to facilitate electrically coupling said bonding pad to said trace.

13. The sensor system of claim **9** further comprising a lid coupled to said die substrate, said lid substantially covering said die substrate and exposing said bonding pad, wherein said dielectric substrate comprising a first face and a second face opposite said first face, said dielectric substrate defining an aperture extending between said first face and said second face.

14. The sensor system of claim **13**, wherein the aperture is sized to receive said lid therethrough, wherein said trace is positioned on said second face of said dielectric substrate.

15. The sensor system of claim **14**, wherein said bonding pad is positioned on said die substrate to be in a face-to-face relationship and aligned with said trace when said lid is received within the aperture.

16. The sensor system of claim **9**, wherein said metalized layer comprises an oxidized surface layer covering the first metal material, and wherein said re-metalized bump extends from the first metal material through the oxidized surface layer.

17. A method of assembling a sensor system, said method comprising:

forming a metalized layer on a die substrate of a sensor assembly, the metalized layer being formed of a first metal material and including a bonding pad;

forming a remetalized bump on the bonding pad, the remetalized bump being formed of a second metal material;

applying an adhesive to the remetalized bump; and

coupling the sensor assembly to an electronics board, the electronics board including a dielectric substrate and a conductive trace coupled to the dielectric substrate, the remetalized bump electrically coupling the trace to the bonding pad.

18. The method of claim **17** further comprising aligning, prior to said coupling, a lid of the sensor assembly with an aperture defined in the dielectric substrate, wherein said aligning aligns the bonding pad with the trace.

19. The method of claim **17**, wherein the metalized layer includes an oxidized surface layer covering the first metal material, wherein said forming a remetalized bump on the bonding pad further comprises removing, at least a portion of, the oxidized surface layer, thereby forming the remetalized bump in direct contact with the first metal material.

20. The method of claim **17** further comprising singulating, after coupling the sensor assembly, the die substrate from a wafer assembly, the wafer assembly including a plurality of sensor assemblies.

* * * * *