US 20230116242A1

(19) United States
(12) Patent Application Publication
Schwartz et al.
(10) Pub. No.: US 2023/0116242 A1
(43) Pub. Date: Apr. 13, 2023

(54) **MULTI-PART SENSING ELECTRODE CONNECTOR**

(71) Applicant: **Palo Alto Research Center Incorporated**, Palo Alto, CA (US)

(72) Inventors: **David Eric Schwartz**, Concord, MA (US); **David K. Biegelsen**, Portola Valley, CA (US); **Ping Mei**, San Jose, CA (US)

(21) Appl. No.: **17/499,216**

(22) Filed: **Oct. 12, 2021**

Publication Classification

(51) **Int. Cl.**

H01R 12/78	(2006.01)
H01R 13/20	(2006.01)
A61B 5/1477	(2006.01)
A61B 5/00	(2006.01)
G01N 27/327	(2006.01)

(52) **U.S. Cl.**

CPC ***H01R 12/78*** (2013.01); ***H01R 13/20*** (2013.01); ***A61B 5/1477*** (2013.01); ***A61B 5/682*** (2013.01); ***G01N 27/3275*** (2013.01); *A63B 71/085* (2013.01)

(57) **ABSTRACT**

A thin form of an electrical connector for creating a detachable connection between two circuit elements is disclosed. When the connector is employed, only an outer electrode present on a portion of the connector is exposed to the ambient environment and the rest of the electronics of both the connector and of a device into which the device is integrated can be insulated from the ambient environment. The parts of the connector can create a small three-dimensional interlock structure to seal off contact area and to facilitate electrical contacts between two circuit elements. The connector structure is flexible, allowing the connector to be embedded into a curved surface of a device that can use the electrode exposed to the environment to obtain data regarding the environment.

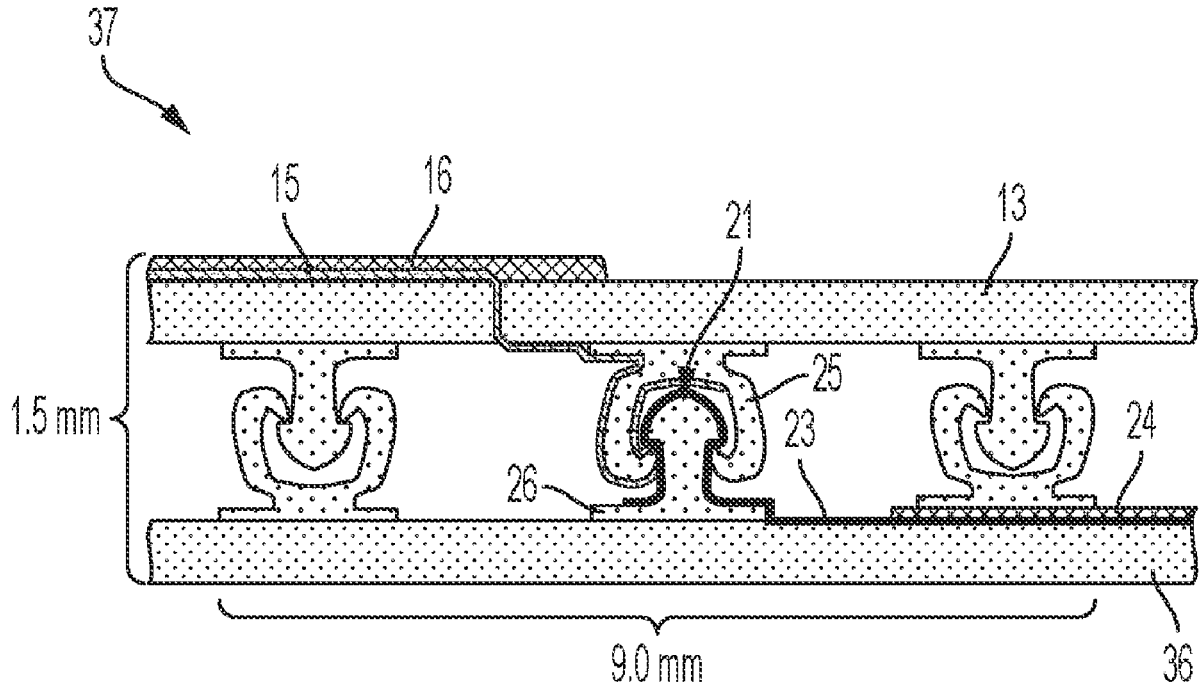

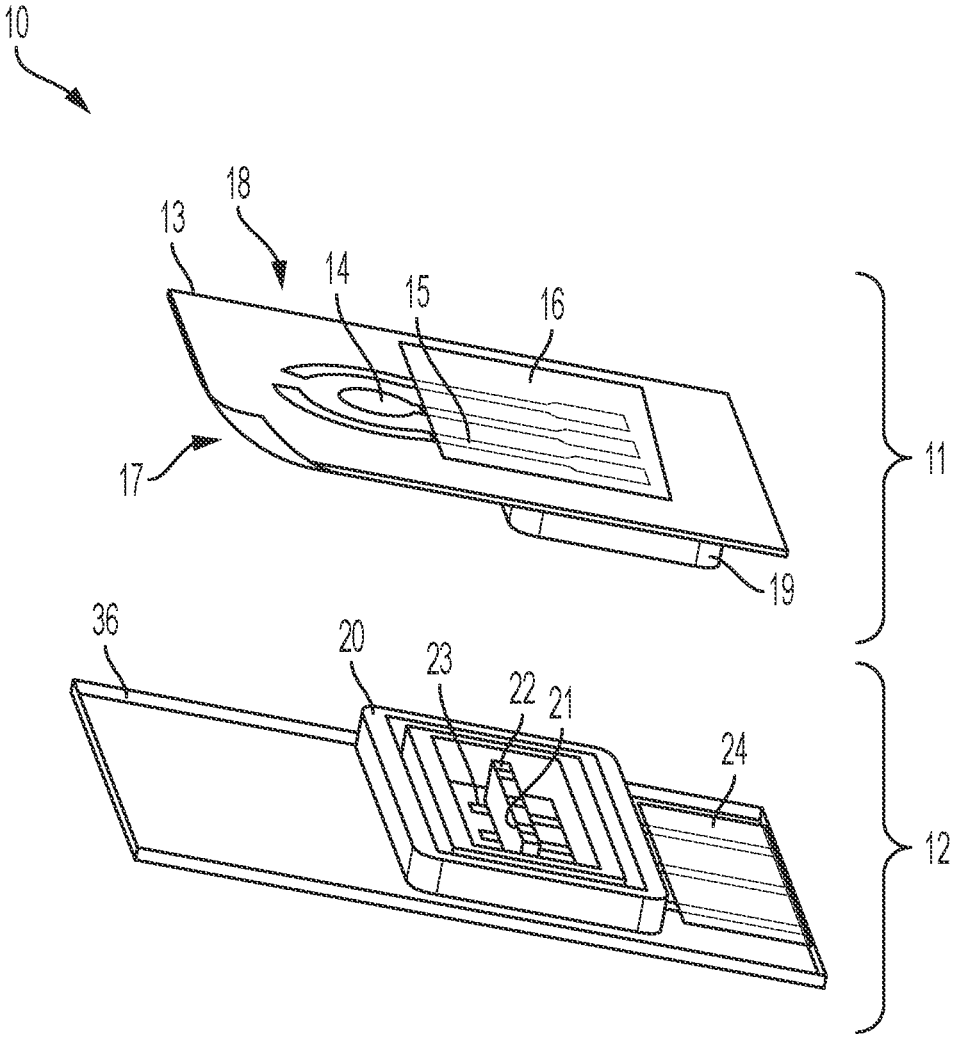

FIG. 1

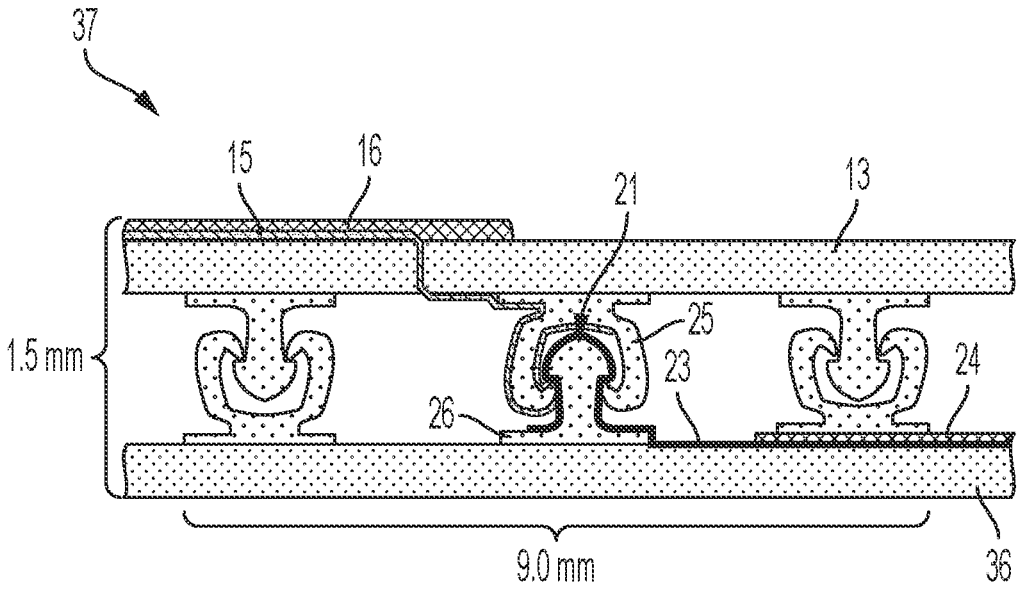

FIG. 2

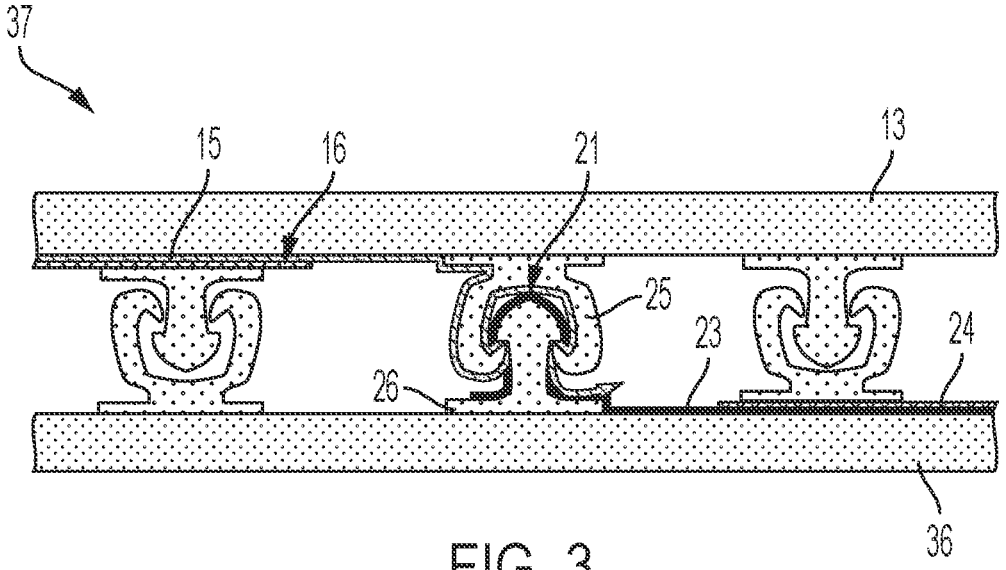

FIG. 3

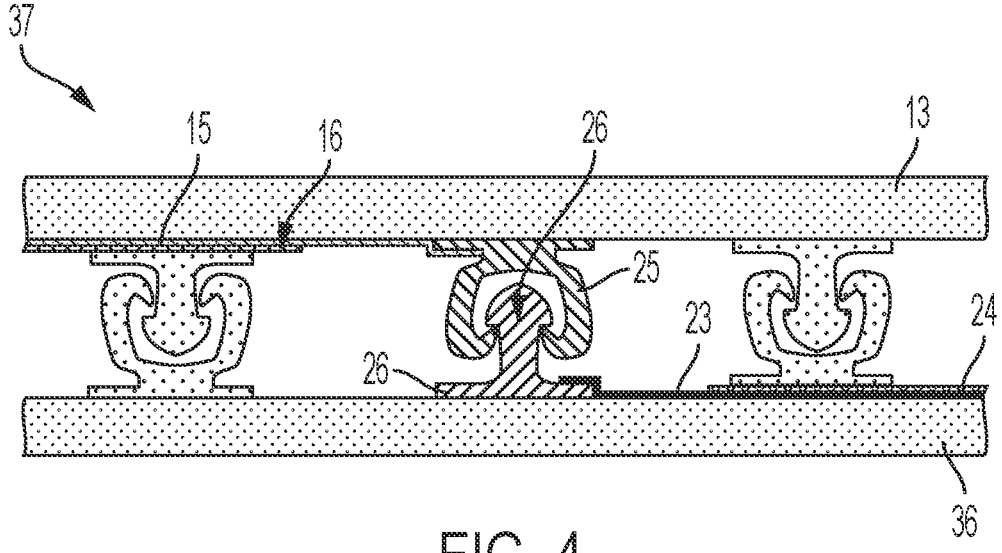

FIG. 4

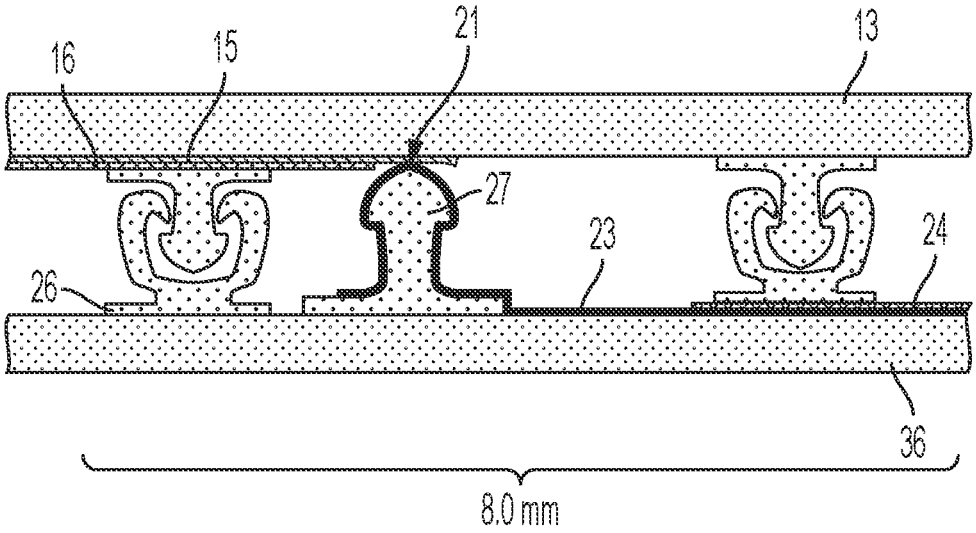

FIG. 5

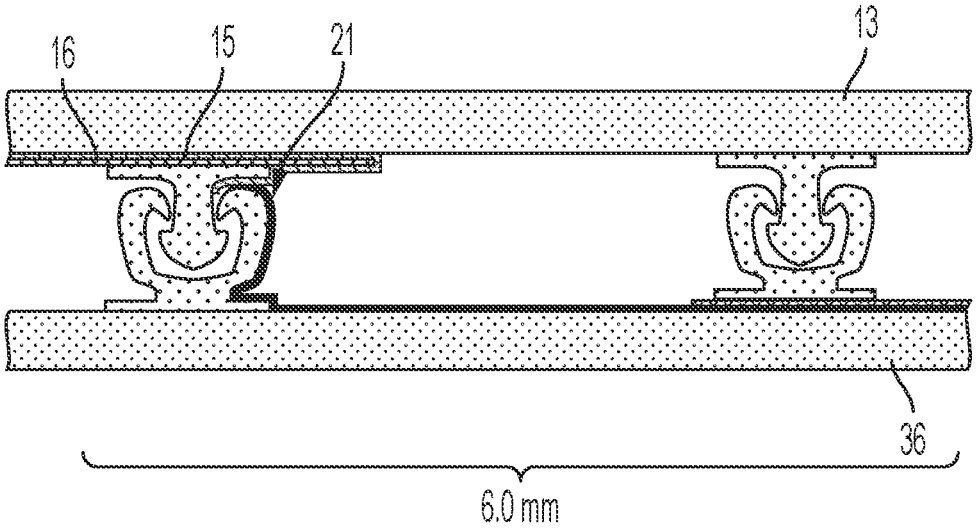

FIG. 6

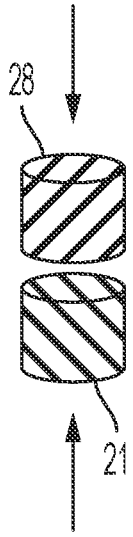

FIG. 7A

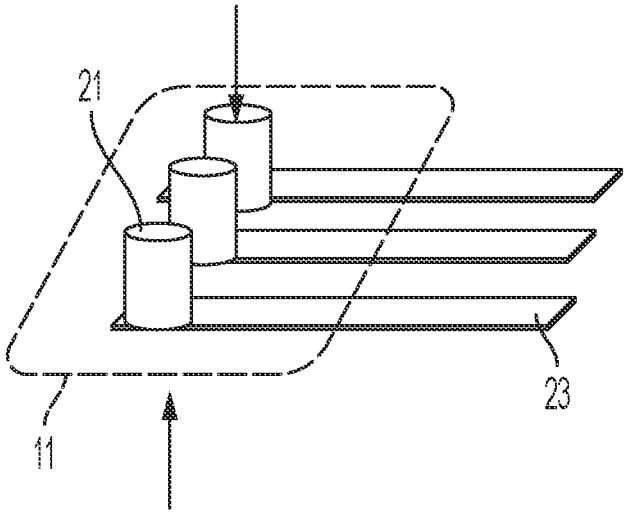

FIG. 7B

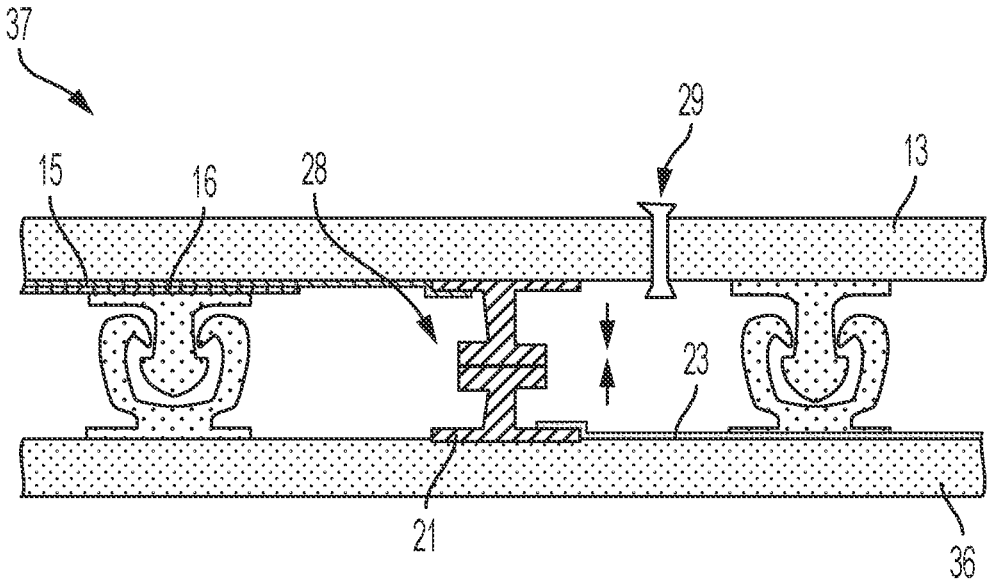

FIG. 8

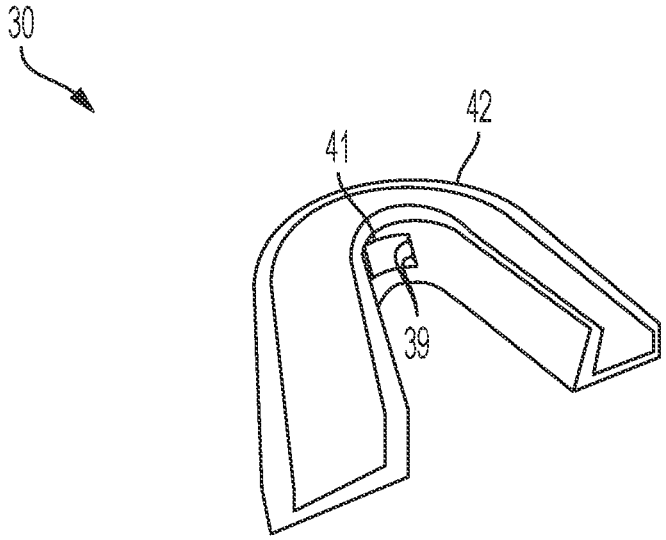

FIG. 9

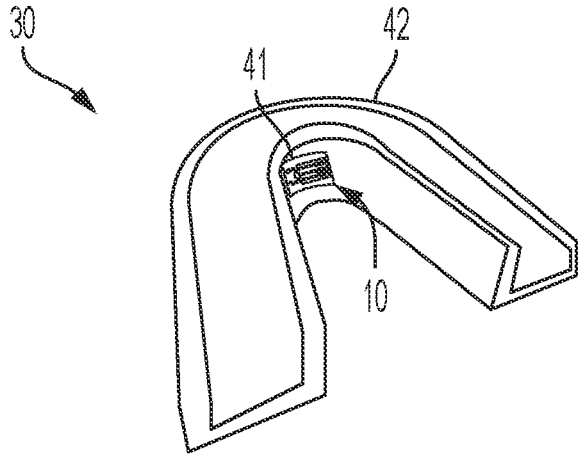
30
42
41
10

FIG. 10

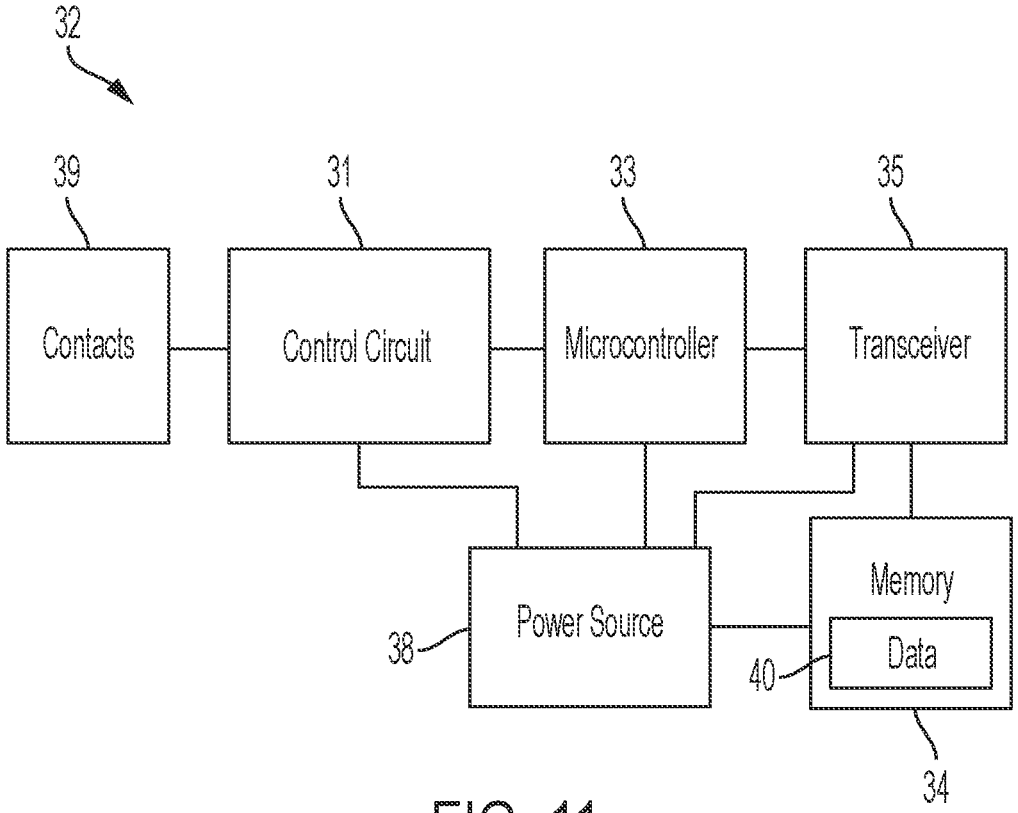
32
39
31
33
35
Contacts
Control Circuit
Microcontroller
Transceiver
Memory
Power Source
Data
38
40
34

FIG. 11

MULTI-PART SENSING ELECTRODE CONNECTOR

FIELD

[0001] This application relates in general to electronics, and in particular, to a multi-part sensing electrode connector.

BACKGROUND

[0002] Electrical connectors are commonly used to connect various parts of electronics to form an integrated system, including systems used to sense data regarding an ambient environment. In some integrated systems, periodic replacement of a connector may be required, such as due to wearing out of connector parts due to exposure to the ambient environment or a need for replacement for an alternative component. A detachable connector such as zero insertion force (ZIF) connector is a type of connector for thin and flexible cable which can be detached and reconnected. With a ZIF socket, a lever on the socket is released and opens a gap so that the contact pads on the cable can be inserted with little force. The lever is then engaged, allowing the contacts to close and grip the contact pads on the flex circuit. ZIF sockets can be used for implementation of a connection in a sensor system that utilizes disposable sensors.

[0003] However, many applications in embedded electronic systems pose great challenges that traditional detachable electrical connectors are not always be able to meet. For example, frequently, for a detachable connector to be used, the connector must be thin enough to fit within the system into which the connector needs to be embedded and flexible enough to be embedded into a curved host structure. Further, as detachable connectors must often be used in areas where exposure of the ambient environment, such as an environment that includes liquids, would be harmful to the internal electronics of the system, such connectors must be sealable to prevent the exposure. This characteristic is especially important for systems used within a human body, where damage to electrical contacts could cause electrical damage to the surrounding human tissue. Finally, to make them practicable for a large number of applications, such connectors must be low cost and easy to assemble, a requirement which ZIF sockets in particular may not be able to meet.

[0004] Attempts have been made to address these challenges. For example, U.S. Pat. No. 10,141,668, issued Nov. 27, 2018, to Mei et al., the disclosure of which is incorporated by reference, discloses a thin form of electrical connection assembly that includes two circuit elements on separate flexible substrates. The detachable connection is implemented through selective deposition of fine patterns of conductive materials and non-conductive and pressure-sensitive adhesive. However, applying such fine patterns of conductive and non-conductive materials complicates the manufacturing of such connectors, limiting their availability and elevating their cost. Likewise, as high-quality adhesives have to be used to make such connection assembly reliable and allow sufficient conductivity in combination with sufficient water-sealing properties between the two parts, the use of such a connection assembly may be prohibitively expensive for certain applications, especially where parts of the connector must be periodically discarded.

[0005] Accordingly, there is a need for an easy-to-manufacture electrical connector that can protect internal electronics of a system into which the connector is embedded from ambient environment and that is flexible enough to accommodate various shapes of the system into which the connector is embedded.

SUMMARY

[0006] A thin form of an electrical connector for creating a detachable connection between two circuit elements is disclosed. When the connector is employed, only an outer electrode present on a portion of the connector is exposed to the ambient environment and the rest of the electronics of both the connector and of a device into which the device is integrated can be insulated from the ambient environment. The parts of the connector can create a small three-dimensional interlock structure to seal off contact area and to facilitate electrical contacts between two circuit elements. The connector structure is flexible, allowing the connector to be embedded into a curved surface of a device that can use the electrode exposed to the environment to obtain data regarding the environment.

[0007] In one embodiment, a multi-part sensing electrode connector is provided. The connector includes an electrode portion and an interconnect portion. The an electrode portion includes: a flexible substrate; one or more electrodes positioned on a side of the flexible substrate that is configured to be exposed to an ambient environment; one or more one electrode traces, one portion of each of the electrode traces connected to one of the 1 electrodes and further portion of that electrode trace positioned on a side of the flexible substrate of the flexible substrate opposite to the side on which the electrodes are positioned; one or more connectors positioned on a flexible substrate opposite side and each shaped to detachably mate to a further connector positioned on an interconnect portion; and an enclosure surrounding the further portion of the electrode traces, wherein the connectors are comprised at least one of within the enclosure and on the enclosure. The interconnect portion includes: a further flexible substrate; one or more of the further connectors positioned on a side of the further flexible substrate; one or more electrically conductive contact structures positioned on the side of the further flexible substrate, wherein the contact structures electrically interface with the further portions of the one or more of the electrode traces when the connectors mate the further connectors; one or more conductive traces, each interfaced to one of the contact structures and further positioned to interface the contact structure to an external device when the interconnect portion and the electrode portion are inserted into the external device; and a further enclosure formed on the side of the further flexible substrate and surrounding the contact structures, wherein the further connectors are comprised at least one of within the further enclosure and on the further enclosure, wherein the enclosure and the further enclosure mate to form an interlock that insulates the further portions of the electrode circuits and the contact structures from the ambient environment when the connectors are mated to the further connector, and wherein the control circuit is configured to sense data regarding the ambient environments via one or more of the electrodes when the connectors are mated to the further connectors.

[0008] In a further embodiment, a smart mouth guard with a disposable electrode portion is provided. The smart mouth guard includes a mouth guard and an electrical connector. The mouth guard includes a curve-shaped housing compris-

ing a receptacle shaped to receive an electrical connector and to electrically interface the electrical connector to a control circuit; the control circuit configured to sense electrochemical data via one or more electrochemical electrodes of the electrical connector exposed to an inside of a person's mouth; a microcontroller interfaced to the control circuit and configured to receive the measured data; a wireless transceiver interfaced to the microcontroller and configured to transmit the sensed data to an remote device. The electrical connector includes an electrode portion and interconnect portion. The electrode portion includes a flexible substrate; one or more electrochemical electrodes positioned on a side of the flexible substrate that is configured to be exposed to an ambient environment; one or more one electrode traces, one portion of each of the electrode traces connected to one of the electrochemical electrodes and further portion of that electrode trace positioned on a side of the flexible substrate opposite to the side on which the electrochemical electrodes are positioned; and one or more connectors positioned on the flexible substrate opposite side and each shaped to detachably mate to a further connector positioned on an interconnect portion; and an enclosure surrounding and the another portion of the electrode traces, wherein the connectors are comprised at least one of within the enclosure and on the enclosure. The interconnect portion includes a further flexible substrate; one or more of the further connectors positioned on a side of the further flexible substrate; one or more electrically conductive contact structures positioned on the further flexible substrate side, wherein the contact structures electrically interface with the further portions of the one or more of the electrode traces when the connectors mate the further connectors; one or more conductive traces, each interfaced to one of the contact structures and further positioned to interface the contact structure to a control circuit when the interconnect portion is integrated into the receptacle; a further enclosure formed on the further flexible substrate side and surrounding the contact structures, wherein the further connectors are comprised at least one of within the further enclosure and on the further enclosure, wherein the enclosure and the further enclosure mate to form an interlock that insulates the further portions of the electrode circuits and the contact structures from the ambient environment when the connectors are mated to the further connector.

[0009] Still other embodiments of the present invention will become readily apparent to those skilled in the art from the following detailed description, wherein is described embodiments of the invention by way of illustrating the best mode contemplated for carrying out the invention. As will be realized, the invention is capable of other and different embodiments and its several details are capable of modifications in various obvious respects, all without departing from the spirit and the scope of the present invention. Accordingly, the drawings and detailed description are to be regarded as illustrative in nature and not as restrictive.

BRIEF DESCRIPTION OF THE DRAWINGS

[0010] FIG. **1** is a diagram of a multi-part sensing electrode connector in accordance with one embodiment.

[0011] FIG. **2** is a cross-section of the interlock of the multi-part sensing electrode connector **10** of FIG. **1** in accordance with one embodiment.

[0012] FIG. **3** is a cross-section of the interlock of the multi-part sensing electrode connector **10** of FIG. **1** in accordance with a further embodiment.

[0013] FIG. **4** is a cross-section of the interlock of the multi-part sensing electrode connector of FIG. **1** in accordance with a still further embodiment.

[0014] FIG. **5** is a cross-section of the interlock of the multi-part sensing electrode connector of FIG. **1** in accordance with a still further embodiment.

[0015] FIG. **6** is a cross-section of the interlock of the multi-part sensing electrode connector of FIG. **1** in accordance with a still further embodiment.

[0016] FIG. **7**A is an illustration showing the contact structure and the standalone structure in accordance with one embodiment.

[0017] FIG. **7**B is a diagram illustrating the mating of multiple contact structures to the elements of the electrode portion in accordance with one embodiment.

[0018] FIG. **8** is a cross-section of the interlock of the multi-part sensing electrode connector of FIG. **1** in accordance with a still further embodiment.

[0019] FIG. **9** is a diagram illustrating a smart mouth guard into which a connector **10** can be inserted in accordance with one embodiment.

[0020] FIG. **10** is a cross-sectional view of a portion of the mouth guard in which the connector is embedded.

[0021] FIG. **11** is a diagram illustrating circuitry of the smart mouth guard **30** in accordance with one embodiment.

DETAILED DESCRIPTION

[0022] While the descriptions below and accompanying FIGURES include particular dimensions, in a further embodiment, the parts of the multi-part connector described below could have other dimensions.

[0023] FIG. **1** is a diagram of a multi-part sensing electrode connector **10** in accordance with one embodiment. The connector includes two components: a sensor tag **11** (also referred to as an electrode portion **11** below) and an interconnect portion **12**. As further described below, the electrode portion **11** could be disposable after a single use while the interconnect portion could be reusable multiple times. The electrode portion **11** includes a thin, flexible substrate **13**, which can be made of a material such as plastic, though other kinds of materials are possible. The flexible material of the substrate **13** allows the electrode portion **11** to adopt a curved shape that would allow the electrode portion **11** to be inserted into a curved housing of a sensor into which the electrode portion **11** needs to be embedded, as further described below. The flexible material of the substrate **13** also allows the electrode portion to be more easily removed when inserted into a host system (such as a monitoring devices, though other devices external to the connector or combination of such devices are possible) by peeling the electrode portion **11** back. Similarly, the substrate **36** of the interconnect portion **12** is similarly made of a flexible material (such as plastic, though other materials are possible) that allows the interconnect portion to fit into curved receptacles which integrate the connector **10** into an electrical system.

[0024] On one side of the substrate **13** are positioned one or more electrodes **14** (also referred to as "sensor electrodes **14**), though which sensing of characteristics of the ambient environment can be conducted. In one embodiment, the electrodes **14** can be electrochemical electrodes that can

measure chemical concentration within the ambient environment, such as presence and concentration of particular biomarkers if inserted into the human body (such as the human mouth as described below), though other kinds of electrodes are also possible. Each of the electrodes **14** is connected to an electrode trace **15**, with each electrode **14** and the electrode trace connected to that electrode **14** being electrically insulated from other electrodes **14** and the electrode traces **15** connected to those electrodes **14**. The entirety of the traces **15** positioned on the top side **18** of the electrode layer **11** are covered with a protection layer **16** that insulates the traces **15** from the ambient environment. The protection layer **16** is made of a non-electrically-conductive material, such as non-electrically-conductive plastic, though other materials are also possible.

[0025] The electrode traces **15** pass through the substrate **13** and come out on the side **17** of the substrate **13** opposite to the side **18** on which the electrodes **14** are. A portion of the electrode traces on the opposite side can be adhered to the surface of the opposite side **17** with a cover layer (shown below) that helps maintain the position of the electrode trace **15**; however, a portion of each of the electrode traces are also exposed on the opposite surface **17** in a position to interface (directly or indirectly) with the contact structures **21** on the interconnect portion **12**. As further described below, the portions of the electrode traces **15** that are exposed on the opposite side **17** side can be positioned in a variety of ways and serve to interface the electrodes **14** to a control circuit (such as a potentiostat) that senses the data regarding the ambient environment via contact structures **21** positioned on the interconnect portion **12** the when the electrode portion **11** couples to the interconnect portion **14**.

[0026] The coupling between the electrode portion **11** and the interconnect portion **12** is accomplished by a mating between an electrode portion enclosure **19** located on the opposite side **17** of the substrate **13** to an interconnect portion enclosure **20** located on the interconnect portion **12**. The mating is accomplished by mating of connectors **25** located within the electrode portion enclosure **19** and further connectors **26** located within interconnect portion enclosure **20**, shown below beginning with reference to FIG. **2**. In one embodiment, the connectors **25** can be located on the structures that make up the enclosure **19**, and, alternatively to or in addition to the connectors **25** being on the structures, if multiple structures make up the enclosure **19**, the connectors **25** can be between the multiple structures. Likewise, the further connectors **26** can be located on the structures that make up the interconnect portion enclosure **20**, and, alternatively to or in addition to the further connectors **26** being on the structures, if multiple structures make up the interconnect portion enclosure **20**, the further connectors **26** can be between the multiple structures. In a further embodiment, alternatively or in addition to the connectors **25** being on or between the structures making up the enclosure **19**, the connectors could be surrounded by the enclosure **19**. Similarly, in a further embodiment, alternatively or in addition to the further connectors **26** being on or between the structures making up the further enclosure **20**, the further connectors **26** could be surrounded by the further enclosure **20**. Further, while the enclosure **19** and the further enclosure **20** are shown of a particular shape, other shapes of the enclosures are possible as long as the enclosures **19**, **20** are able to mate with each other in a way that detachably couples the electrode portion **11** to the interconnect portion **12**. As shown below with reference to FIG. **2**, the exposed portion of the circuit trace **15** can be surrounded by the enclosure **19**. The mating between the enclosures **19**, **20** can be done in a way similar to what is described in U.S. Pat. No. 7,137,736, issued Nov. 21, 2006 to Pawloski et al., the disclosure of which is incorporated by reference, though in a further embodiment, other mating mechanisms are possible. The connectors **25** and the further connectors **26** can be coupled and decoupled upon an application of a sufficient force, allowing the connector **10** elements to be separated from each other, and for the electrode portion **11** to be disposable and for the interconnect portion to be reusable.

[0027] In addition to mating with the enclosure **19**, the further enclosure **20** positioned on the interconnect portion **12** further surrounds electrically conductive contact structures **21** mentioned above, with each contact structure **21** electrically interfacing with the exposed portion of one electrode trace **15** on the opposite side **17** of the electrode portion **11** when the enclosure **19** mates to the enclosure **20**. As seen with reference to FIG. **1**, the contact structure **21** can be a part of a contact protrusion **22** (which can include multiple structures **21**, with each structure **21** contacting an electrode trace **15** connected to a single one of the electrodes **14**), though other ways to position the electrically conductive material **21** are possible. The contact structure **21** can be metal, electrically-conductive plastic, electrically conductive rubber, or another electrically conductive material or mixture of electrically conductive materials. A contact structure **21** can be implemented using a variety of materials. For example, a contact structure **21** can be implemented using an electrically conductive (such as metallic) foil. Alternatively, a contact structure **21** can be implemented using an electrically-conductive (such as metallic) coating. Still other materials of which the contact structure **21** can comprise are possible.

[0028] The interconnect portion **12** further includes electrically conductive traces **23**, with each trace **13** connecting to one of the contact structures **21** (either directly or through another object, such as through electrically conductive portions of the contact protrusion **22**). Each conductive trace **23** and the contact structure **21** connected to that trace **23** are electrically insulated from other contact structures **21** and the conductive traces **23** connected to those contact structures. The conductive traces **23** pass through the walls of the further enclosure **20**, and run along the surface of the interconnect portion **12**. In one embodiment, the conductive traces **23** reach the end of the interconnect portion **12**, where they wrap around the edge of the interconnect portion **12** and interface with contacts **39** (shown below with reference to FIGS. **9** and **11**) of the host system into which the connector **10** is integrated (when the connector is indeed integrated into that system), with the system contacts electrically interfacing the conductive traces **23** contact structures **21**, the electrode traces **15** connected to those contact structures **21**, and the electrodes **14** connected to those electrode traces **15** to the control circuit (such as a potentiostat) that can sense characteristics of the ambient environment via the electrodes **14**. In a further embodiment, the conductive traces **23** can routed towards the host system contacts **39** in a different way, passing through the interconnect portion **12** using one or more vias. The entirety (or in a further embodiment, a portion) of the conductive traces **23** that is outside of the walls of the further connector and that is not positioned to interface with the host system contacts can also

be covered with a protection layer **24** to protect the conductive traces **23** from contact with the ambient environment.

[0029] As mentioned above, the exposed portions of electrode traces **15** can be surrounded by the enclosure **19** and the contact structures can be within the further enclosure **20**—when the enclosure **19** and the further enclosure **20** mate, they form an interlock structure that protects the exposed portions of the traces **15** and the contact structures from exposure to the ambient environment. Further, the only electrical components of the connector exposed to the environment are the electrodes **15**, thus protecting the electronics of the connector and of any host system from the ambient environment. FIG. **2** is a cross-section of the interlock **37** of the multi-part sensing electrode connector **10** of FIG. **1** in accordance with one embodiment. As mentioned above, the enclosure **19** surrounds one or more connectors **25** that mate one or more further connectors **26** positioned within the further enclosure **20**. The further connectors **25** can be integrated as part of the contact protrusion **22**, though in a further embodiment, other locations for the further connectors **26** are possible. As can be seen with reference to FIG. **2**, the connectors **25** can include a cavity and the exposed portion of an electrode trace **15** can be positioned within that cavity. Likewise, the further connectors **26** can include a protrusion and the contact structure **21** can be wrapped around the protrusion. In this embodiment, the contact structure **21** can be a thin (~10 um) metallic foil wrapped around the protrusion. Other kinds of contact structure **21** are possible. The exposed portion of the trace **15** and the contact structure **21** can be secured within the cavity and the protrusion respectively in a variety of ways. For example, if the exposed trace **15** or the contact structure **21** include metallic foil, they could be glued on to respectively portion of the cavity or the protrusion. For another example, if the exposed trace **15** or the contact structure **21** include a conductive paste, they could be extruded (such as through 3D printing) on respectively the cavity or the protrusion. The same techniques could be used for securing the exposed trace to other surfaces (such as cavities and protrusions) in the embodiments described below. When the protrusion enters the receptacle, the structure and the exposed portion of the electrode trace **15** come into contact—likewise, the contact breaks if the electrode portion **11** is decoupled from the interconnect portion **12**. While in FIG. **2** and the FIGURES below, the connectors **25** are represented as female and the further connectors **26** are represented as male in the mating, in a further embodiment, the connectors **25** could be male and the further connectors **26** female.

[0030] In the embodiment shown with reference to FIG. **2**, the total thickness of the connector **10** when the electrode portion **11** is engaged to the interconnect portion **12** can be about 1.5 mm. The thickness of at most about 1.5 mm is also achievable for the embodiments described below. The structure can be thinner than 1.5 mm with a customer design and fabrication of the locking elements. This thickness can meet a requirement for embedding the connector to a wall of a smart mouthguard, as described below with reference to FIG. **2**.

[0031] The interfacing of the exposed portion of an electrode trace **15** and a contact surface **21** does not have to the interface between a connector **25** and a further connector **26**. FIG. **3** is a cross-section of the interlock **37** of the multi-part sensing electrode connector **10** of FIG. **1** in accordance with a further embodiment. As can be seen with reference to FIG. **3**, the exposed portion of the electrode trace **15** extends outside of the cavity of the connector **25** and comes into contact with a portion of the contact surface that is not wrapped around the portion of the protrusion that entered into the cavity. This embodiment does not require pressing the electrode trace **15** through the flexible substrate **13**, which can make the connector **10** easier to manufacture and more reliable.

[0032] An exposed portion of an electrode trace **15** does not have to physically touch a contact surface **21** in order to be electrically interfaced to that contact surface, as can be seen with reference to FIG. **4**. FIG. **4** is a cross-section of the interlock **37** of the multi-part sensing electrode connector **10** of FIG. **1** in accordance with a still further embodiment. At least a part of both the connectors **25** and the further connectors **26** can be made of an electrically conductive material, such as metal, electrically conductive plastic, or electrically conductive rubber, though still other materials are possible. In a further embodiment, the connector **25** and the further conductive can be made of a polymer or other insulating material that is coated with metal or another conductive material. Thus, as can be seen with reference to FIG. **4**, the exposed portion of the electrode trace **15** can simply touch the connector **25** that is mated to a further connector **26** to be electrically to a contact surface **21** that touches the further connector **26**.

[0033] An exposed portion of an electrode trace **15** or the contact surface **21** can be located on surfaces other than a connector **25** or a further connector **26** and still interface with each other, as can be seen with reference to FIG. **5**. FIG. **5** is a cross-section of the interlock **37** of the multi-part sensing electrode connector **10** of FIG. **1** in accordance with a still further embodiment. As can be seen with reference to FIG. **5**, a protrusion **27** that does not mate a connector **25** can be formed on the interconnect portion **12** and the contact structure **21** can be positioned on the protrusion **27** (such as using attachment techniques described above). An exposed portion of an electrode trace **15** is similarly positioned on the surface of the opposite side **17** of the electrode portion **11** (such as using techniques described above) at a point where when the connectors **25** mate the further connectors, the exposed portion of the electrode trace **15** comes into contact with a contact structure **21** positioned on the protrusion **27**. In this arrangement, the total lateral dimension of the connector **10** (with both parts **11**, **12** engaged to each other) can be reduced to less than 8 mm or shorter.

[0034] An exposed portion of an electrode trace **15** and the contact surface **21** can also be positioned on outer edges of a connector **25** and a further connector **26** respectively and not on the parts of the connector and the further connector **26** that participate in the mating, as can be seen with reference to FIG. **6**. FIG. **6** is a cross-section of the interlock **37** of the multi-part sensing electrode connector **10** of FIG. **1** in accordance with a still further embodiment. When the connector **25** and the further connector **26** mate, the exposed portion of an electrode trace **15** and the contact surface **21** their positioning on the outer edges still allows the contact portion to come into contact with each other. In this arrangement, the total lateral dimension of the connector is reduced to less than 8 mm.

[0035] As mentioned above, the contact structures **21** could be grouped together on a contact protrusion **22**. In a further embodiment, each contact structure **21** could be a standalone structure **21** and the exposed portion of a circuit

trace could likewise be connected to a standalone structure **28** that could interface with the contact structure **21**. Both the contact structure **21** and the standalone structure **28** could be made of an elastic, electrically-conductive material, such as electrically conductive polymer (such as plastic) or electrically conductive rubber, though other materials are also possible. FIG. **7**A is an illustration showing the contact structure **21** and the standalone structure **28**, in accordance with one embodiment. While the structures **21**, **28** are shown as being cylindrical with reference to FIG. **7**A, in a further embodiment, other shapes of the structures **21**, **28** are possible, such as a snap or a spring contact, are also possible.

[0036] When the connectors **25** mate to the further connectors **26**, the contact structure **21** comes into contact with the standalone structure **28**, interfacing the electrode trace **15** to the contact surface **21**. FIG. **7**B is a diagram illustrating the mating of multiple contact structures **21** to the elements of the electrode portion **11** in accordance with one embodiment.

[0037] While the interlock portion prevents the exposed portion of the electrode traces **15** and the contact structures **21** from being exposed to liquid, the strength of the seal formed by the interlock and isolation from the ambient environment could be increased by removing gases from the interlock formed by the enclosure **19** and the further enclosure **20**. Such removal can be accomplished by introducing a one-way valve through which air and any other gases could be removed from the interlock. FIG. **8** is a cross-section of the interlock **37** of the multi-part sensing electrode connector **10** of FIG. **1** in accordance with a still further embodiment. As can be seen with reference to FIG. **8**, the one-way valve **29** can be present in the substrate **13** of the electrode portion **11** and any gases that are trapped within the interlock upon the mating of the connectors **25** to the further connectors **26** can be removed through the one-way valve **29** by pushing the contact structure **21** against the structure **28** interfaced to the exposed portion of an electrode trace **15**, thus allowing for a more reliable electrical interface and absence of interference from any gases that could be present in the ambient environment.

[0038] As mentioned above, the connector **10** can be integrated into an embedded a system **10** that would utilize the sensor electrodes **14** to collect data regarding the ambient environment. An example, of such an environment can be a human body, with the connector being integrated into a physiological monitor, with one example of such monitor being a smart mouth guard. FIG. **9** is a diagram illustrating a smart mouth guard **30** into which a connector **10** can be inserted in accordance with one embodiment. The connector **10** is not inserted into the mouth guard **30** shown with reference to FIG. **9** and the receptacle **41** into which the connector **10** can be inserted is visible with reference to FIG. **9**. The receptacle **41** includes contacts **39** that can interface with the conductive traces **23** of the interconnect portion **12** when the connector **10** is inserted into the receptacle **41**. As can be seen with reference to FIG. **9**, both the housing **42** of mouth guard **30** and the receptacle **41** are curved, requiring the flexible substrates **13**, **36** of the electrode portion **11** and the interconnect portion to fit within the receptacle **41**. As the smart mouth guard **10** is curved, the flexibility of the substrate **13** of the electrode portion **11** and the substrate **36** of the interconnect portion **12** is necessary to allow for the connector to fit into a receptacle in the housing of the guard **30**. In one embodiment, the interconnect portion **12** can be permanently embedded within the receptacle **41** of the mouth guard **30**, such as being built within the receptacle **41** for the connector within the guard **30**, and the electrode portion **11** can be disposable after a single use. Having the electrode portion **11** disposable allows to use a fresh electrode **11** for each measurement, which is useful to prevent incorrect sensed data caused by degradation of electrodes **14** due to exposure to the contents of the human mouth. The disposable electrode portion **11** also allows for easy cleaning of the mouth guard **30** for transfer to a different user. In a further embodiment, the interconnect portion **12** could also be removable from the mouth guard **30**, allowing to replace the interconnect portion if one wears out. The removable interconnect portion **12** could also transferrable between different mouth guards **30** of the same design. In this embodiment, the total lateral dimension of the connector **10** is less than 9 mm. Further, as both portions **11**, **12** are flexible, the tolerances for the design do not have to be tight as the portions **11**, **12** have a certain robustness to misalignment.

[0039] The connector **10** within the mouth guard allows to interface the electrodes **14** to a control circuit within the mouth guard, as shown with reference to FIG. **9**. FIG. **10** is a diagram of the smart mouth guard **30** of FIG. **9** with a connector **10** inserted in accordance with one embodiment. The control circuit **31** can be a potentiostat, though other kinds of control circuits **31** are also possible. The control circuit **31** in turn is interfaced to other circuitry of the smart mouth guard **30**. FIG. **11** is a diagram illustrating circuitry **32** of the smart mouth guard **30** in accordance with one embodiment. In addition to the control circuit **31** that interfaces to contacts **39** that in turn connect to conductive traces **23** (thus ultimately interfacing to the electrodes **14**), the circuitry **32** includes a microcontroller **33**. The control circuit **31** is interfaced to the microcontroller **33** and provides the sensed data to the microcontroller **33**, which can optionally perform processing of the data and store the data **40** (after the optional processing) in a memory **34**. The circuitry **32** further includes a wireless transceiver **35** (such as a Bluetooth® Low Energy transceiver, though other kinds of transceivers **35** are also possible) interfaced to the microcontroller **33**. The microcontroller **33** uses the wireless transceiver **35** to wirelessly send the collected data to a remote device, such as a server that performs further processing of the collected data. The circuitry further includes a power source **38** (such as a battery) that powers the micro-controller **33**, the wireless transceiver **35**, the memory **34**, the control circuit **31**, and any other components of the mouth guard **30** requiring power. Other components of the circuitry **30** are also possible.

[0040] While the invention has been particularly shown and described as referenced to the embodiments thereof, those skilled in the art will understand that the foregoing and other changes in form and detail may be made therein without departing from the spirit and scope of the invention.

What is claimed is:

1. A multi-part sensing electrode connector, comprising:

an electrode portion comprising:

a flexible substrate;

one or more electrodes positioned on a side of the flexible substrate that is configured to be exposed to an ambient environment;

one or more one electrode traces, one portion of each of the electrode traces connected to one of the

electrodes and further portion of that electrode trace positioned on a side of the flexible substrate opposite to the side on which the electrodes are positioned;

one or more connectors positioned on the flexible substrate opposite side and each shaped to detachably mate to a further connector positioned on an interconnect portion; and

an enclosure the further portion of the electrode traces, wherein the connectors are comprised at least one of within the enclosure and on the enclosure; and

the interconnect portion comprising:

a further flexible substrate;

one or more of the further connectors positioned on a side of the the further flexible substrate;

one or more electrically conductive contact structures positioned on the side of the further flexible substrate, wherein the contact structures electrically interface with the further portions of the one or more of the electrode traces when the connectors mate the further connectors;

one or more conductive traces, each interfaced to one of the contact structures and further positioned to interface the contact structure to a to an external device when the interconnect portion and the electrode portion are inserted into the external device; and

a further enclosure formed on the side of the further flexible substrate, and the contact structures, wherein the further connectors are comprised at least one of within the further enclosure and on the further enclosure, wherein the enclosure and the further enclosure mate to form an interlock that insulates the further portions of the electrode circuits and the contact structures from the ambient environment when the connectors are mated to the further connector, and wherein the external device is configured to sense data regarding the ambient environments via one or more of the electrodes when the connectors are mated to the further connectors and the interconnect portion and the electrode portion are inserted into the external device.

2. A multi-part sensing electrode connector according to claim **1**, wherein a portion of the electrode traces are positioned on the flexible substrate side and at least a portion of the conductive traces are positioned on the further flexible substrate side, further comprising:

a layer of electrically insulating material covering the circuit traces on the flexible substrate side; and

a further layer of further electrically insulating material covering the conductive traces on the further flexible substrate side.

3. A multi-part sensing electrode connector according to claim **1**, wherein the external device comprises a control circuit that senses the data.

4. A multi-part sensing electrode connector according to claim **3**, external device is a mouth guard, the ambient environment is a mouth of a person, and the sensed data comprises biomarker data associated with the person.

5. A multi-part sensing electrode connector according to claim **1**, wherein the interconnect portion and the electrode portion flex to accommodate a curved shape of a receptacle within the external device.

6. A multi-part sensing electrode connector according to claim **1**, wherein the electrode traces pass through the flexible substrate.

7. A multi-part sensing electrode connector according to claim **1**, wherein the flexible substrate comprises plastic.

8. A multi-part sensing electrode connector according to claim **1**, wherein at least one of the contact structures comprises metal foil.

9. A multi-part sensing electrode connector according to claim **1**, wherein at least one of the contact structures comprises an electrically conductive coating.

10. A multi-part sensing electrode connector according to claim **1**, wherein:

one of the connectors comprises a cavity and the further portion of least one of the circuit traces is positioned along a portion of a surface of the cavity; and

one of the further connectors comprises a protrusion shaped to snugly fit within the cavity, at least one of the contact structures wrapped around at least a portion of the protrusion.

11. A multi-part sensing electrode connector according to claim **1**, wherein:

one of the connectors comprises a cavity and the further portion of least one of the circuit traces is positioned along an entirety of a surface of the cavity; and

one of the further connectors comprises a protrusion shaped to snugly fit within the cavity, at least one of the contact structure wrapped around at least a portion of a surface of the protrusion.

12. A multi-part sensing electrode connector according to claim **1**, wherein at least a portion of one of the connectors and at least a portion of the further connector that mates with that one connector each are electrically conductive and wherein one of the contact structures and the further portion of one of the electrode traces electrically interface via the electrically conductive connector and further connector.

13. A multi-part sensing electrode connector according to claim **12**, wherein the electrically conductive connector and further connector each comprise at least one of electrically conductive polymer and electrically conductive rubber.

14. A multi-part sensing electrode connector according to claim **11**, further comprising:

a protrusion positioned on the interconnect side; and

one of the contact structures wrapped around at least a portion of the protrusion,

wherein the another portion of the one electrode trace is adjacent to the opposite electrode portion side and comes into contact with the contact structure when the connectors mate to the further connectors.

15. A multi-part sensing electrode connector according to claim **1**, wherein the further portion of one of the electrode traces is positioned on an outer surface of one of the connectors and one of the contact structures is positioned on an outer surface of the further connector that mates the one connector.

16. A multi-part sensing electrode connector according to claim **1**, further comprising:

an elastic, electrically conductive structure different than one of the connectors and formed on the flexible substrate opposite side, the structure interfaced to the further portion of one of the electrode traces,

wherein one of the contact structures comprises a further elastic structure different from the further connectors formed on the interconnect portion side and wherein

the structure and the further structure mechanically interface when the connectors mate the further connectors.

17. A multi-part sensing electrode connector according to claim **16**, further comprising:

a one-way valve formed in the electrode portion, wherein the mating of the connectors and the further connectors causes an expulsion of air from the interlock created by the enclosure and the further enclosure.

18. A smart mouth guard with a disposable electrode portion, comprising:

a mouth guard comprising:

a curve-shaped housing comprising a receptacle shaped to receive an electrical connector and to electrically interface the electrical connector to a control circuit;

the control circuit configured to sense electrochemical data via one or more electrochemical electrodes of the electrical connector exposed to an inside of a person's mouth;

a microcontroller interfaced to the control circuit and configured to receive the measured data;

a wireless transceiver interfaced to the microcontroller and configured to transmit the sensed data to a remote device;

the electrical connector, comprising:

an electrode portion comprising:

a flexible substrate;

one or more electrochemical electrodes positioned on a side of the flexible substrate that is configured to be exposed to an ambient environment;

one or more one electrode traces, one portion of each of the electrode traces connected to one of the electrochemical electrodes and further portion of that electrode trace positioned on a side of the flexible substrate opposite to the side on which the electrochemical electrodes are positioned;

one or more connectors positioned on flexible substrate opposite side, each shaped to detachably mate to a further connector positioned on an interconnect portion; and

an enclosure surrounding the another portion of the electrode traces, wherein the connectors are comprised at least one of within the enclosure and on the enclosure; and

the interconnect portion comprising:

a further flexible substrate;

one or more of the further connectors positioned on a side of the further flexible substrate;

one or more electrically conductive contact structures positioned on the further flexible substrate side, wherein the contact structures electrically interface with the further portions of the one or more of the electrode traces when the connectors mate the further connectors;

one or more conductive traces, each interfaced to one of the contact structures and further positioned to interface the contact structure the control circuit when the interconnect portion is integrated into the receptacle; and

a further enclosure formed on the side of the interconnect portion and surrounding the contact structures, wherein the enclosure and the further enclosure mate to form an interlock that insulates the further portions of the electrode circuits and the contact structures from the ambient environment when the connectors are mated to the further connector.

19. A smart mouth guard according to claim **18**, wherein the electrochemical data comprises biomarkers of the person.

20. A multi-part sensing electrode connector according to claim **18**, wherein a portion of the electrode traces are positioned on the flexible substrate side and at least a portion of the conductive traces are positioned on the further flexible substrate side, further comprising:

a layer of electrically insulating material covering the circuit traces on the flexible substrate side; and

a further layer of further electrically insulating material covering the conductive traces on the further flexible substrate side.

* * * * *