A-T Controls, Inc.

BALL VALVE INSPECTION MANUAL

TABLE OF CONTENTS

1 OBJECTIVE 3

2 SCOPE 3

3 REFERENCES 3

4 SAFETY INFORMATION 3

5 MATERIALS AND TOOLS REQUIRED 4

6 PROCEDURE 4

- 6.1 Pre-Inspection Preparation 4
- 6.2 Visual Inspection 4
- 6.3 Operational Check 5
- 6.4 Internal Inspection 6
- 6.5 Reassembly 7
- 6.6 Documentation and Reporting 7

7 VERSION HISTORY 7

8 CONTACT INFORMATION: 8

1 OBJECTIVE

To ensure the Triac Controls Series 77, Sanitary End, 3-Piece Ball Valve is in good working condition and operates effectively, this SOP provides detailed steps on how to inspect the valve safely and thoroughly.

2 SCOPE

This procedure applies to the inspection of the Triac Controls Series 77, Sanitary End, 3-Piece Ball Valve installed within any BIOVECTRA facility. Target audience for this procedure includes maintenance personnel and technically experienced staff with a mechanical background but no prior experience specific to this valve.

3 REFERENCES

Document Description	Location
Triac-Series-77-Brochure	https://a-tcontrols.com/wp-content/uploads/2024/04/77-3R.pdf
77 Series Ball Valve IOM	https://a-tcontrols.com/Documents/29/IOM08092.pdf
Torque-Sizing-Guide	https://a-tcontrols.com/wp-content/uploads/2022/08/Torque-Sizing-Guide.pdf
77-DA-0400-PXX.STEP 3D Model	https://a-tcontrols.com/Documents/1736/77-DA-0400-PXX.STEP

4 SAFETY INFORMATION

4.1 Wear all personal protective equipment (PPE) such as gloves, safety glasses, and appropriate footwear (Figure 1).

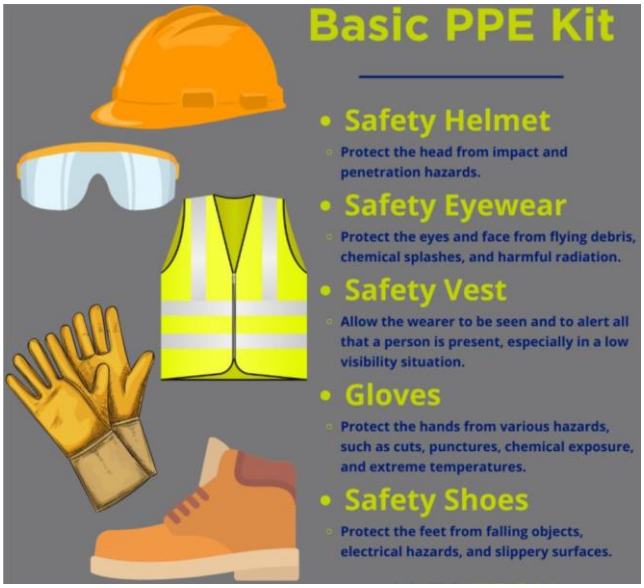

Figure 1(Basic PPE Kit)

4.2 Disconnect the valve from any pressurized system and ensure it is fully depressurized before starting the inspection.

4.3 Follow lockout/tagout (LOTO) procedures as per facility guidelines.

4.4 Be cautious of potential residual fluid in the valve that may be hazardous.

4.5 Do not proceed if any safety concerns are present. Report to the supervisor immediately.

5 MATERIALS AND TOOLS REQUIRED

- Wrench set
- Torque wrench
- Clean cloths
- Inspection mirror
- Flashlight
- PTFE-safe lubricant (if reassembly is necessary)

6 PROCEDURE

6.1 Pre-Inspection Preparation

6.1.1 Verify that the valve is not under pressure and is isolated from the main line.

6.1.2 Ensure the work area is clean and free of obstruction.

6.2 Visual Inspection

6.2.1 Perform an external visual inspection:

6.2.2 Inspect the body (Part 1) for any signs of corrosion or physical damage, highlighted in blue in Figure 2.

Figure 2(Part 1 Highlighted in blue)

6.2.3 Check that the handle (Part 15), handle lock (Part 16), and handle sleeve (Part 17) are intact and functional.

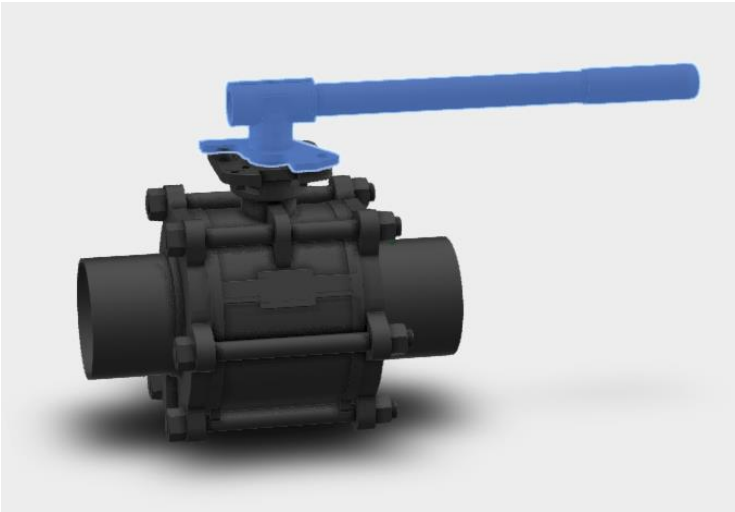

Figure 3(Part 15,16 & 17 are highlighted in blue)

6.2.4 Use a flashlight and inspection mirror to inspect hard-to-see areas.

6.2.5 Document any visible defects or abnormalities.

6.3 Operational Check

6.3.1 Rotate the handle to open and close the valve, ensuring smooth operation.

6.3.2 The handle should rotate 90 degrees from fully closed to fully open, as shown in Fig 4.

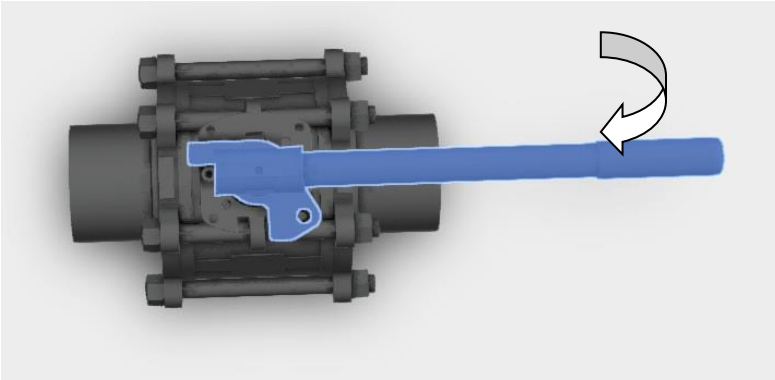

Figure 4(Handle Rotation – 90° Open/Close Operation)

6.3.3 Any resistance or unusual sounds should be noted.

6.3.4 Verify the ball (Part 3) moves smoothly and seats properly in both open and closed positions.

6.4 Internal Inspection

6.4.1 Remove the end caps (Part 2) using an appropriate wrench or socket.

Figure 5(End Caps are highlighted in blue)

6.4.2 Carefully remove the ball (Part 3) and seats (Part 4) which are highlighted in below figure.

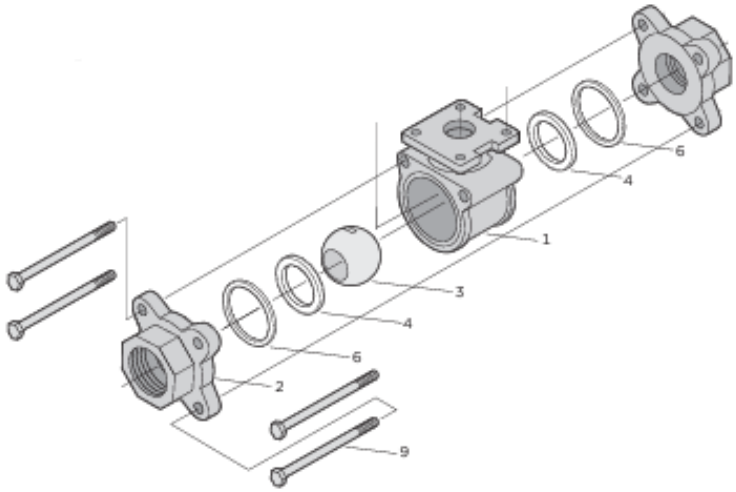

Figure 6(Exploded assembly view — key internal components)

6.4.3 Inspect the ball for wear, scratches, or pitting.

6.4.4 Inspect the seats for deformation, cracks, or wear.

6.4.5 Inspect the stem (Part 7), stem seal (Part 6), gland packing (Part 8), and other internal components for signs of wear and tear, as shown in the figure below.

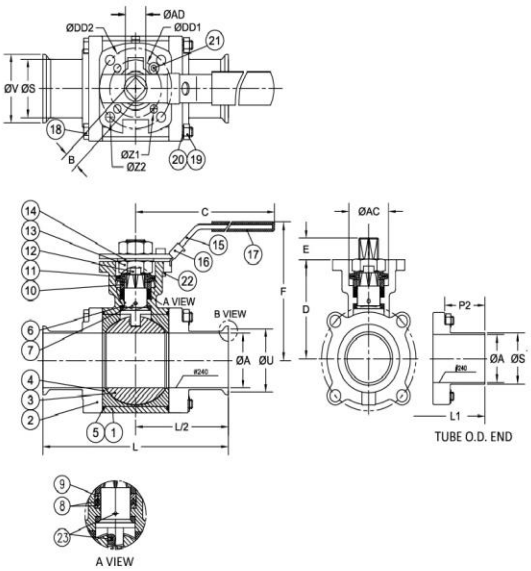

MATERIALS LIST

NO.	PART NAME	QTY.	MATERIAL	REPAIR KIT
1	BODY	1	ASTM A351 GRADE CF3M	
2	END CAP	2	ASTM A351 GRADE CF3M	
3	BALL	1	ASTM A276 GRADE CF3M	
4	SEAT	2	PTFE	✔
5	JOINT GASKET	2	PTFE	✔
6	STEM SEAL	1	PTFE	✔
7	STEM	1	ASTM A276 SS 316L	
8	GLAND PACKING	1	PTFE	✔
9	GLAND WASHER	1	RTFE	✔
10	GLAND BUSHING	1	AISI 304	
11	BELLEVILLE WASHER	2	AISI 301	
12	LOCK SADDLE	1	AISI 304	
13	STEM NUT	2	AISI 304	
14	STEM WASHER	1	AISI 304	
15	HANDLE	1	AISI 304	
16	HANDLE LOCK	1	AISI 304	
17	HANDLE SLEEVE	1	VINYL	
18	BODY BOLT	#	**	
19	BODY BOLT NUT	&	##	
20	WASHER	&	AISI 304	
21	STOP BOLT	1	AISI 304	
22	BOLT NUT	1	AISI 304	
23	ANTI-STATIC DEVICE	2	AISI 316	

Figure 7(Internal Components and Materials List)

6.4.6 Clean all components with a PTFE-safe cloth, removing any debris or buildup.

6.5 Reassembly

6.5.1 Apply a thin layer of PTFE-safe lubricant to the stem and other moving parts if required.

6.5.2 Reassemble the valve in the reverse order of disassembly.

6.5.3 Tighten all bolts (Parts 18, 19) to the recommended torque settings found in the valve's technical documentation.

6.5.4 Perform a final operational check to ensure the valve opens and closes smoothly.

6.6 Documentation and Reporting

6.6.1 Complete an inspection report detailing findings, actions taken, and any recommendations for further action.

6.6.2 Report any major defects or repairs required to the supervisor immediately.

7 VERSION HISTORY

Version	Author	Revision Date	Approved By	Approval Date	Description
1.0	Viren patel	07-12-2024	Viren patel	07-12-2024	Initial Release

8 CONTACT INFORMATION:

For any questions regarding this procedure, Please contact Patelviren024@gmail.com.

Note: Ensure adhere to all safety guidelines and procedures specific to your facility. Review and approval of the SOP should be done by the responsible manager before the implementation.