Highly Configurable 6T SRAM Write Assist with Sense-Amplifier Input Offset Compensation

Vishal Kevat
MS ECE, Purdue University
West Lafayette, US
vkevat@purdue.edu

Johan Cheriyan
MS ECE, Purdue University
West Lafayette, US
jcheriya@purdue.edu

***Abstract*—This report presents the design and simulation of low-voltage assist techniques for a conventional 6T SRAM cell using Cadence Virtuoso. As CMOS technologies continue to scale, SRAM operation is increasingly constrained by reduced write margin, smaller read bitline differentials, and transistor mismatch. To improve writeability, a highly configurable assist scheme combining Negative Bitline (NBL) and temporary Column VDD Collapse was implemented. Negative Bitline assist increases the effective access transistor strength by driving the selected bitline below ground, while VDD Collapse weakens the internal pull-up devices during the write interval. For the read path, a latch-type differential sense amplifier with capacitor-based input offset compensation was designed to improve sensing reliability under low-voltage conditions. Transient simulations verified correct functional operation of all proposed circuits. Write-delay comparison showed that the combined assist scheme provides the fastest cell switching, while shmoo plot analysis demonstrated a wider successful operating region across supply voltage and pulse-width variations. The designed sense amplifier also successfully detected small bitline differentials and generated stable full-swing outputs. Overall, the results show that combining moderate write-assist methods with robust sensing circuitry is an effective approach for improving low-voltage SRAM performance without modifying the standard 6T bitcell structure.**

***Index Terms*—CMOS, low-voltage SRAM, SRAM assist, writeability, negative bitline, VDD collapse, offset compensation, sense amplifier, shmoo**

I. Introduction

Static random-access memory (SRAM) continues to be one of the most critical building blocks in modern digital systems. It is widely used in processor cache memories, register files, networking hardware, and embedded systems because of its fast access time and compatibility with standard CMOS fabrication processes. In advanced processors, SRAM arrays occupy a significant portion of the total die area, and in many cases they also contribute heavily to total chip power consumption. As a result, improving SRAM efficiency has become just as important as improving logic performance [1].

The conventional 6T SRAM cell remains the most commonly used bitcell because it offers a favorable balance of density, speed, and manufacturability. As shown in Fig. 1, the cell consists of two cross-coupled CMOS inverters connected through access transistors controlled by the wordline (WL), while the bitlines BL and BLB are used for read and write operations. This compact structure has made the 6T cell the standard choice for dense cache memories. However, aggressive CMOS scaling has made reliable operation of the 6T cell increasingly difficult. Lower supply voltages are desirable because dynamic power scales approximately with V_{DD}^2, but reducing supply voltage also weakens transistor drive current and shrinks read/write noise margins. This creates a direct conflict between low-power operation and reliable memory functionality [1].

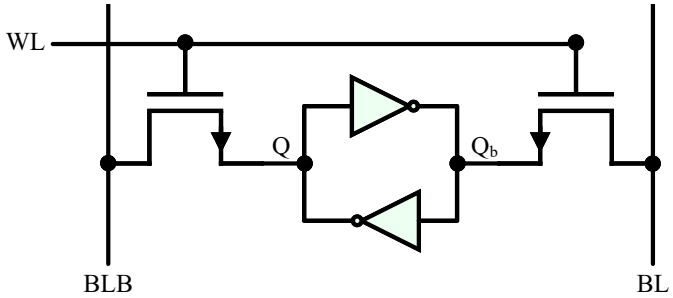

Fig. 1. Conventional 6T SRAM cell structure

Among the primary operating modes of an SRAM cell, write operation is often one of the most challenging under reduced supply voltage. During a write cycle, the access transistor must overpower the internal pull-up PMOS transistor and force the storage node to switch state. At low V_{DD}, the drive current of the access transistor is reduced, while threshold voltage variation and mismatch further worsen the problem. As a result, write failures can occur before read failures in many practical designs [2]. Designers therefore employ write-assist techniques that temporarily modify bitline, wordline, or supply conditions during the write window.

Read operation also becomes more difficult in scaled technologies. During a read cycle, only a small differential voltage develops between the bitlines before the sense amplifier is enabled. At low voltage, this differential signal becomes slower and smaller, making the sense amplifier highly sensitive to internal offset caused by device mismatch. If the inherent offset is comparable to the bitline differential, the wrong value may be sensed. For this reason, many high-performance SRAM macros incorporate offset reduction or compensation techniques in the sensing path [3].

Several recent works have addressed these low-voltage SRAM challenges through peripheral circuit innovation. Highly configurable write-assist circuits combining negative bitline and local supply collapse have shown substantial write margin improvement [3]. Other designs use Vtrip-tracking write assist to automatically adjust assist strength according to process and voltage conditions [4]. Charge-recycling based techniques have also been proposed to reduce the energy overhead of assist circuitry while maintaining reliability [5], [6].

The objective of this project is to study and implement practical SRAM assist methods using Cadence Virtuoso. A combined write-assist structure using Negative Bitline (NBL) and Column VDD Collapse was designed and simulated. In addition, a latch-type sense amplifier with capacitor-based offset compensation was implemented for read sensing. Functional verification was carried out through transient simulations, and shmoo plots were generated to study operating margin across pulse width, supply voltage, and assist strength.

II. Overview of Write-Ability Assist Techniques

The write ability of a 6T SRAM cell refers to how easily a new value can be forced into the cell during a write operation. In a conventional cell, one of the bitlines is driven low while the other remains high, and the wordline turns on the access transistors. To successfully flip the stored data, the selected bitline must discharge one internal node strongly enough to overcome the cross-coupled inverter feedback. As supply voltage scales downward, this process becomes increasingly difficult because the access transistor current reduces significantly [2].

To solve this issue, several write-assist methods have been developed. These methods do not modify the bitcell itself, but instead strengthen the write path or weaken the cell temporarily during the write interval.

A. Negative Bitline Assist

Negative Bitline (NBL) assist is one of the most widely used write-assist techniques. In this method, the selected bitline is driven slightly below ground for a short duration during write access. This increases the effective gate-to-source voltage of the access NMOS transistor and enhances its pull-down capability. Because the storage node is discharged more aggressively, the cell flips state faster and more reliably.

Sinangil et al. demonstrated a configurable negative bitline write-assist scheme in a 28 nm SRAM macro, where assist strength could be adjusted depending on operating conditions [3]. Similar methods continue to be attractive because they provide strong write improvement without changing the 6T bitcell layout.

B. Supply Collapse Assist

Another common technique is temporary reduction of the cell supply voltage during write access. Instead of strengthening the access transistor, this method weakens the internal pull-up PMOS transistor that resists the write operation. Lowering the local supply makes it easier for the bitline driver to discharge the internal node.

Wu et al. proposed a Vtrip-tracking write-assist method where the selected sub-array supply is lowered close to the inverter trip point, improving write margin while maintaining retention of unselected cells [4]. This approach is useful because it provides adaptive assist strength under varying process and voltage conditions.

C. Wordline Overdrive

Wordline overdrive temporarily raises the wordline voltage above nominal V_{DD} during write access. This increases the conduction strength of the access transistor and improves cell accessibility. Although effective, boosted wordline methods usually require additional charge-pump circuitry and must be carefully designed to avoid device reliability concerns [2].

D. Ground Raising Techniques

Some assist methods raise the cell ground node during write operation. This reduces the effective pull-down strength of the internal inverter and weakens data retention temporarily, allowing easier overwriting of the stored bit. While effective, these methods often require careful isolation and control timing.

E. Charge-Recycling Based Write Assist

A key concern in assist design is extra power overhead. Conventional assist circuits may consume substantial dynamic power because large bitline or supply capacitances must be charged and discharged every cycle. To reduce this penalty, charge-recycling approaches reuse previously stored charge to generate assist voltages.

Choi and Park proposed a charge-recycling assist scheme that combines read and write assist operation, reducing dynamic power while preserving reliability [5]. Jeong et al. later presented bitline charge-recycling write-assist circuitry that simultaneously improved minimum operating voltage and energy efficiency [6].

F. Combined Assist Methods

Modern SRAM macros increasingly use multiple moderate assists rather than a single aggressive assist. For example, combining a small negative bitline with mild supply collapse can produce large write improvement while reducing electrical stress. This idea is particularly useful in highly configurable SRAM macros intended to operate over a wide voltage range [3].

III. Overview of Sense-Amplifier Offset Reduction Techniques

The sense amplifier is a key peripheral block in SRAM because it converts the small voltage difference between BL and BLB into a full digital output during read operation. As supply voltage scales down, the bitline differential develops more slowly and with smaller magnitude, making the read path more sensitive to internal mismatch. Under these conditions,

even a small offset in the sense amplifier can lead to incorrect data sensing [1], [3].

Sense-amplifier offset mainly arises from threshold voltage mismatch, unequal parasitic capacitances, and layout asymmetry between the two latch branches. To reduce this effect, designers commonly use symmetrical layout techniques, matched routing, and balanced device sizing. These methods help minimize systematic mismatch and improve sensing accuracy.

Another common approach is to delay the enable signal slightly so that a larger bitline differential is available before regeneration begins. Although this improves sensing margin, too much delay increases read access time.

Capacitor-based offset compensation is an efficient circuit-level solution. In this method, small capacitors are used to redistribute charge at internal latch nodes before evaluation, helping balance the two branches of the sense amplifier. This technique provides improved low-voltage sensing without large area overhead and has been successfully used in advanced SRAM macros [3].

In modern low-voltage SRAM design, offset reduction is essential because read failures are often dominated by sensing limitations rather than cell instability. Therefore, practical SRAM macros usually combine careful layout and compensation circuitry to ensure reliable read operation across process and voltage variations.

IV. Highly Configurable Write Assist Combining Negative BL and VDD Collapse

The write-assist circuit implementation used in this work is shown by Fig. 2. The architecture follows a configurable assist approach in which Negative Bitline (NBL) and local column supply collapse can be applied independently or simultaneously during the write cycle. This provides flexibility to tune assist strength depending on supply voltage, timing margin, or target operating mode [3].

The local supply node of each selected column is denoted as V_{COL}. A header PMOS transistor P0 is inserted between the global V_{DD} rail and V_{COL}. During normal operation, P0 remains ON and the selected SRAM column receives the full supply voltage. When write assist is enabled, P0 is turned OFF to isolate the column from V_{DD} and allow temporary supply collapse. This reduction in V_{COL} weakens the pull-up PMOS devices inside the selected 6T SRAM cells, thereby improving writeability.

A second PMOS transistor P1 is connected between V_{COL} and the left terminal of the boost capacitor C_{BOOST} at node NCL. Transistor P1 is primarily used to charge the capacitor prior to the negative bitline operation. Depending on the selected assist mode, P1 can either charge the capacitor directly from V_{COL} or participate in charge-sharing operation with the collapsing column supply node. This enables reuse of stored charge and improves assist energy efficiency [3].

The capacitor C_{BOOST} is the key element used to generate the negative bitline pulse. Its left plate is connected to node NCL and the right plate is connected to node NCR. When the voltage at NCL is rapidly discharged, capacitive coupling pulls

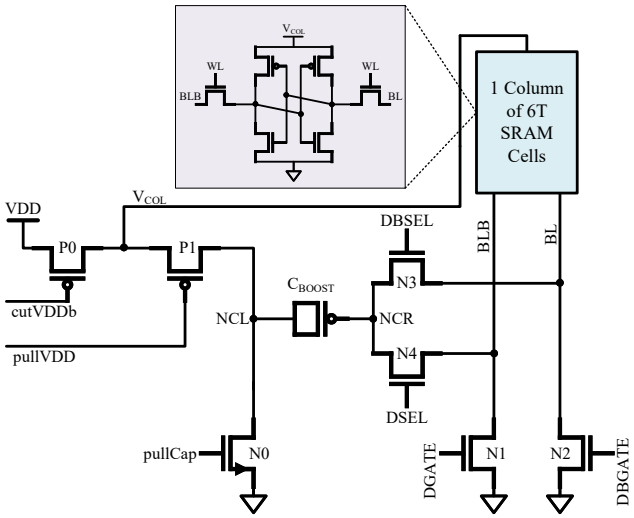

Fig. 2. Implementation of Write-Assist Circuit

node NCR below ground potential. This negative transition is then transferred to the selected bitline, creating the NBL assist condition.

NMOS transistor N0 is connected between node NCL and ground. When N0 turns ON, it rapidly discharges NCL. This action serves two purposes. First, it creates the voltage step required across C_{BOOST} to generate the negative voltage at NCR. Second, it provides a discharge path from V_{COL} through P1, further collapsing the local column supply during the assist interval.

Transistors N1 and N2 act as the conventional write driver pull-down devices for BL and BLB, respectively. Based on the input data, one of the two bitlines is initially discharged while the opposite bitline remains high. This establishes the normal write condition before the assist pulse is applied.

NMOS devices N3 and N4 are selection transistors controlled by signals DSEL and DBSEL. These devices route the negative pulse present at node NCR to the appropriate bitline depending on whether a logic '0' or logic '1' is being written. In this way, only the target bitline receives the negative excursion while the complementary bitline remains undisturbed.

The operation of the complete assist sequence is illustrated in Fig. 3. At the beginning of the write cycle, one bitline is pulled low through N1 or N2 while the wordline is asserted. At this time, V_{COL} remains at V_{DD} and no charge is present across C_{BOOST}.

Next, P0 is turned OFF and P1 is turned ON, allowing charge sharing between V_{COL} and C_{BOOST}. As charge redistributes, the local supply drops to an intermediate level V_{CS} while the capacitor becomes charged. This phase improves energy efficiency since the assist capacitor is charged using charge already stored on the column supply node rather than drawing fresh charge entirely from V_{DD} [3].

In the final assist phase, N1/N2 are disabled and N0 is turned ON. The rapid discharge of NCL forces node NCR

negative through capacitive coupling. Through N3 or N4, this negative pulse is transferred to the selected bitline, while the conduction path through P1 further reduces V_{COL} to a lower value V_{VC}. Therefore, negative bitline assist and supply collapse occur together during the critical write interval.

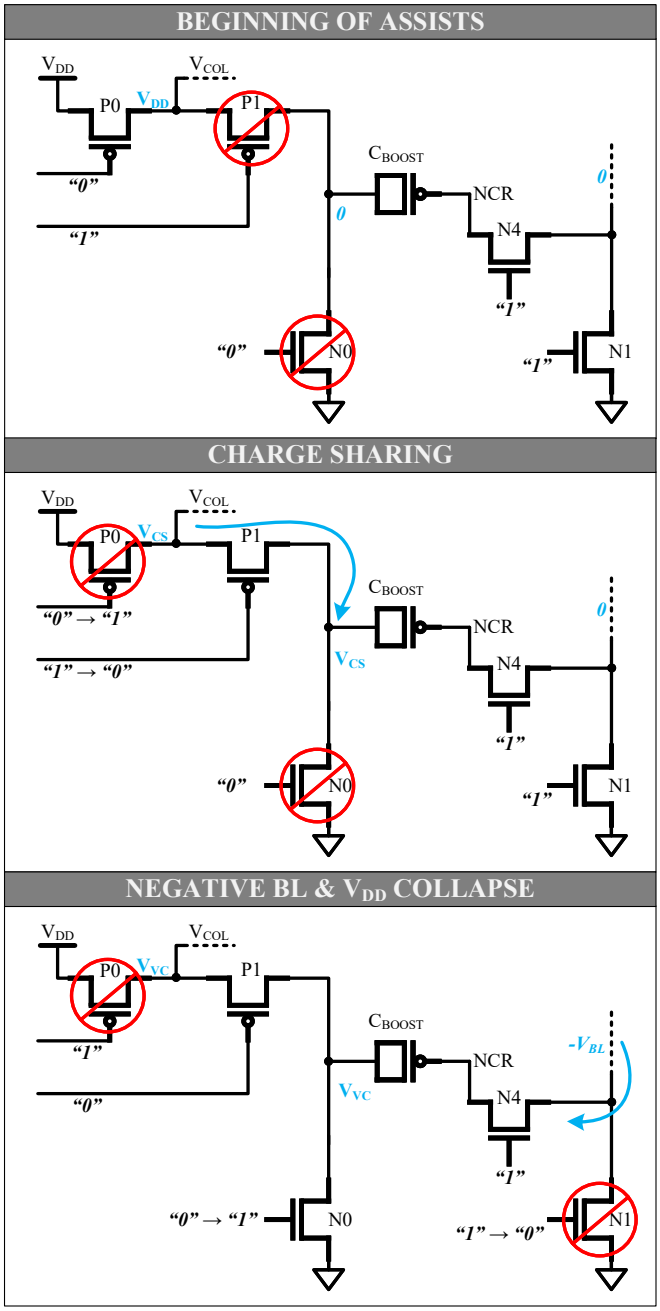

Fig. 3. Step-by-step operation of assists when both negative BL and VDD collapse are used

The main benefit of this combined method is that the access transistor becomes stronger due to the negative bitline, while the internal cell pull-up device becomes weaker due to the reduced supply voltage. Since both effects occur simultaneously, the storage node flips faster and with improved margin compared to using either assist alone.

Another important feature of the design is configurability. By adjusting the timing of P0, P1, and N0, the depth of supply collapse and duration of negative bitline assist can be independently tuned. Similarly, the magnitude of the negative pulse can be modified through capacitor sizing or control timing. This makes the circuit suitable for low-voltage SRAM operation across different process, voltage, and temperature conditions.

Transient simulation results which demonstrates the proposed assist circuit are shown in the Simulation Results section.

V. Capacitor-Based Threshold Mismatching Circuit for Sense Amplifiers

To improve Read reliability at low supply voltage, a latch-type differential sense amplifier with capacitor-based input offset compensation is implemented in this work. In deeply scaled SRAM designs, the bitline differential developed during read operation is often small, making the sense amplifier sensitive to threshold mismatch between its input devices. Even a modest mismatch can bias the latch toward one side and cause incorrect sensing. The proposed scheme reduces this effect by storing threshold-related information on capacitors before evaluation begins, therefore improving matching of the strength of transistors between the two input branches. [3].

Fig. 4 shows the implemented sense-amplifier architecture. Transistors N0 and N1 are the differential input devices whose gates are connected to BL and BLB, respectively. These two devices form the primary sensing path and determine how strongly each side of the latch discharges during evaluation. In a conventional latch-type sense amplifier, mismatch between N0 and N1 directly contributes to input-referred offset. Therefore, the proposed compensation method focuses on equalizing the effective behavior of these two transistors.

The drains of N0 and N1 are connected to internal latch nodes lat and $latb$. NMOS devices N3 and N4 form the regenerative pull-down branches, while PMOS load devices at the top restore and latch the final output states. Once a small imbalance appears between the two internal nodes, positive feedback rapidly amplifies the voltage difference into full-swing digital outputs.

Transistor N2 acts as the tail device controlled by the enable signal en. During standby or reset, N2 remains OFF and isolates the latch from ground. When en is asserted, N2 turns ON and allows current flow through the sensing branches, initiating regeneration. NMOS device N5 is used as an internal control transistor to support proper precharge and latch timing.

The compensation capacitors C0 and C1 are connected to nodes *ct0* and *ct1*, which correspond to the source nodes of input devices N0 and N1. These capacitors are the key elements of the offset reduction technique. Instead of directly sensing with unmatched source conditions, the capacitors temporarily store threshold-dependent voltages during reset and later reproduce compensating source modulation during evaluation.

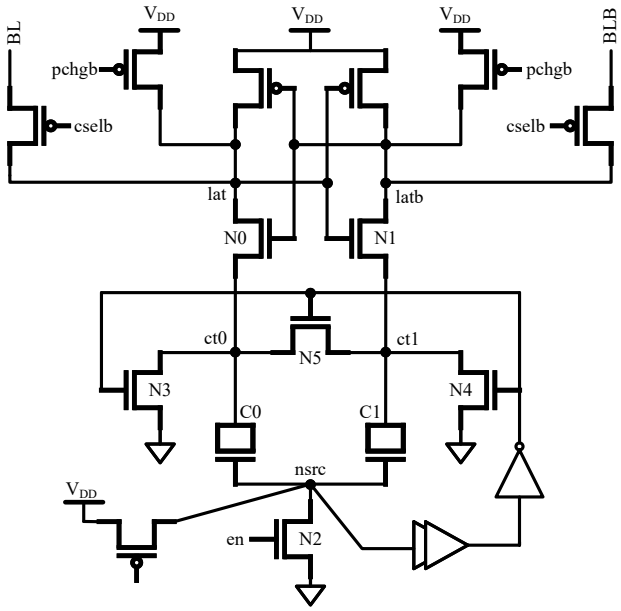

Fig. 4. Sense-amplifier design using capacitors for input device threshold matching

During the Precharge phase, signal $pchgb$ is driven low, forcing the internal output nodes to V_{DD}. At the same time, nodes *ct0* and *ct1* charge through N0 and N1 until they approach approximately $V_{DD} - V_{TN0}$ and $V_{DD} - V_{TN1}$, respectively. Since these voltages depend on the threshold values of the two input transistors, the capacitors effectively sample the mismatch information present in N0 and N1 [3].

After Precharge, the wordline is asserted and a small differential begins to develop between BL and BLB. Once sufficient bitline separation is available, the column-select control signal $cselb$ enables the bitline connection to the sense amplifier inputs. At this point, the stored capacitor voltages remain available at *ct0* and *ct1*.

When the enable signal en is asserted, transistor N2 pulls node *nsrc* downward. Through capacitive coupling via C0 and C1, nodes *ct0* and *ct1* also move downward. Because each capacitor previously stored threshold-related voltage information, the resulting source movement compensates for the mismatch between N0 and N1. Consequently, the effective overdrive strengths of the two input devices become more balanced, reducing input-referred offset.

Following the assertion of en, the latch enters the regeneration phase. The differential voltage already transferred from BL and BLB through the column-select devices controlled by $cselb$ determines which branch discharges faster. Positive feedback within the cross-coupled latch then rapidly amplifies this small imbalance, driving one internal node low and the opposite node high. Final differential outputs are obtained at lat and $latb$. These outputs are subsequently fed to a glitch latch (not shown in Fig. 4), which captures the resolved data when the clock transitions low and prevents transient switching activity from propagating to later stages.

The main advantage of this approach is that offset reduction is achieved without heavily upsizing the sense-amplifier transistors or adding complex calibration logic. The added capacitors occupy modest area while significantly improving low-voltage sensing robustness. This makes the technique attractive for dense SRAM arrays where both speed and area efficiency are important [3].

In summary, the capacitor-based threshold mismatching circuit improves read sensing by converting transistor threshold mismatch into a stored compensation signal during reset, and then using that stored information to balance the latch during evaluation. Simulation waveforms validating the operation of this sense amplifier are presented in the Simulation Results section.

VI. Simulation Results

To verify the operation of the proposed assist techniques, transient simulations were carried out in Cadence Virtuoso using a conventional 6T SRAM cell integrated with the configurable write-assist circuitry in 45 nm technology node. The simulation testbench used for write verification is shown in Fig. 5. The setup includes the SRAM bitcell, write drivers, assist control signals, and waveform probes for internal storage nodes, bitlines, wordline, and local column supply.

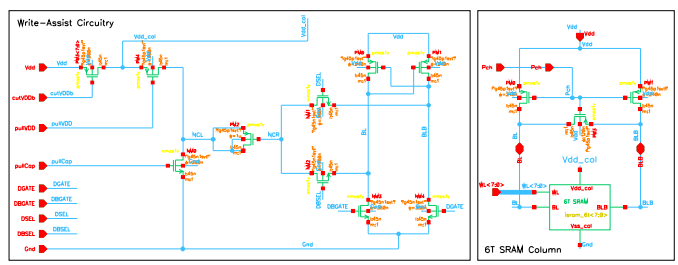

Fig. 5. Cadence Virtuoso testbench used for write-assist verification

The objective of the simulations was to compare write behavior under different assist conditions and observe the improvement in node flipping obtained using Negative Bitline (NBL) alone and NBL combined with temporary column VDD collapse.

A. Negative Bitline Assist

Fig. 6 shows the transient response of the SRAM cell when Negative Bitline assist is enabled. Multiple write cycles are included in the waveform, where the second write event corresponds to the assisted write operation. During this interval, the selected wordline is asserted and the target bitline is driven slightly below ground for a short duration. This negative excursion increases the effective overdrive voltage of the access NMOS transistor and enhances the discharge current through the write path.

Compared to the earlier write transition, the second assisted write cycle shows faster inversion of internal storage nodes Q and Q_b, confirming the benefit of Negative Bitline assist. The local column supply remains near the nominal value since VDD collapse is not activated in this mode.

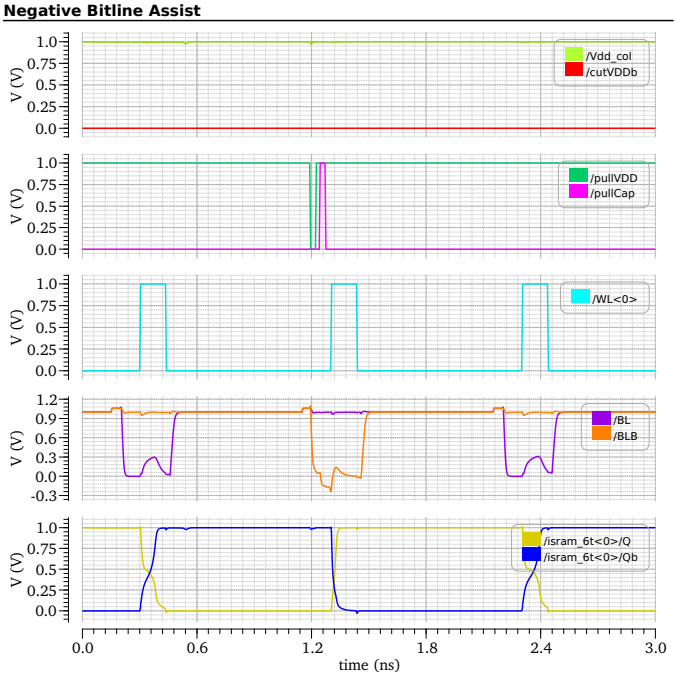

Fig. 6. Transient simulation of write operation using Negative Bitline assist. The second write event corresponds to the assisted write cycle

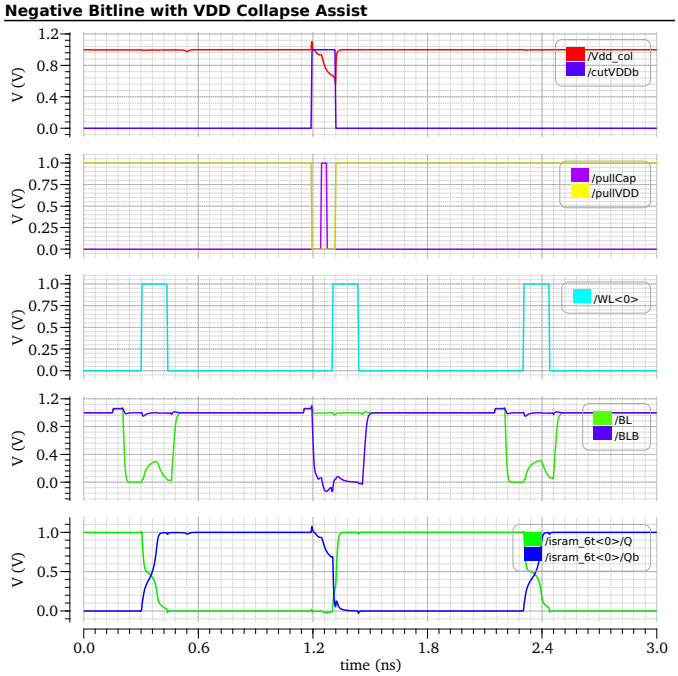

Fig. 7. Transient simulation of write operation using combined Negative Bitline and VDD Collapse assist. The second write event corresponds to the assisted write cycle

B. Negative Bitline with VDD Collapse Assist

Fig. 7 shows the transient response when both Negative Bitline assist and temporary column VDD collapse are enabled simultaneously. As in the previous case, the second write event corresponds to the assisted write cycle. During this interval, the selected bitline is driven negative while the local column supply $V_{DD,col}$ is temporarily reduced.

The simultaneous action of these two assists provides stronger write support. The reduced supply weakens the pull-up PMOS devices inside the SRAM cell, while the negative bitline increases the access transistor drive strength. As a result, the second write cycle shows faster switching of Q and Q_b with lower internal contention compared to the NBL-only case. The temporary reduction in $V_{DD,col}$ is also clearly visible in the waveform.

C. Comparison of Assist Modes and Write Time

To evaluate the effectiveness of the implemented write-assist techniques, both the write functionality and the write access time were compared for three operating modes: no assist, Negative Bitline (NBL) assist, and combined Negative Bitline with VDD Collapse assist.

The write time was measured from the 50% rising point of the wordline (WL) signal to the 50% switching point of the internal storage node. For a write operation in which Q transitions from logic high to logic low, the delay was measured from the rising edge of WL to the falling transition of Q. Similarly, for the complementary transition, the delay was measured to the switching point of Q_b. This definition directly captures the time required for the selected SRAM cell to complete state inversion after access begins.

Both assist techniques successfully enable faster and more robust write operation compared to the baseline case. Negative Bitline assist improves writeability by driving the selected bitline below ground potential, thereby increasing the effective overdrive voltage of the access transistor and strengthening the pull-down path. In contrast, VDD Collapse temporarily lowers the cell supply voltage during the write operation, reducing the restoring strength of the cross-coupled inverter and weakening the pull-up contention.

When both assist methods are applied simultaneously, these mechanisms complement each other. The strengthened access path from NBL and the weakened internal inverter feedback from VDD Collapse together reduce the time required for internal node inversion, resulting in the strongest write margin and fastest write transition. This behavior is consistent with previously reported low-voltage SRAM assist techniques, where combining moderate assist methods is often more effective than relying on a single aggressive assist [3]. In practical SRAM macros, such configurability enables dynamic tuning of assist strength based on operating voltage, process variation, or performance requirements.

TABLE I
WRITE TIME COMPARISON FOR DIFFERENT ASSIST MODES

Assist Mode	Write Time
No Assist	57 ps
Negative Bitline Assist	21 ps
Negative Bitline + VDD Collapse	12 ps

Table I summarizes the extracted write times for the three

simulated cases. The no-assist configuration represents the baseline 6T SRAM write operation and exhibits the largest delay. With Negative Bitline assist, the write time is reduced due to the enhanced access transistor drive strength. The combined Negative Bitline and VDD Collapse scheme achieves the minimum write time, confirming that simultaneous enhancement of the access path and reduction of cell contention provides the most efficient write operation.

D. Shmoo Plot Analysis

In addition to transient simulations, Shmoo plots were generated to study the write operating margin across different assist conditions. In these plots, the green region represents successful write operation, while the red region represents write failure. This gives a visual boundary between functional and non-functional operating points.

Fig. 8 shows the baseline write margin by sweeping the circuit supply voltage and wordline pulse width. As expected, lower supply voltage requires a larger wordline pulse width for successful write operation. This occurs because the access transistor drive current decreases at lower V_{DD}, increasing the time required to flip the internal storage node.

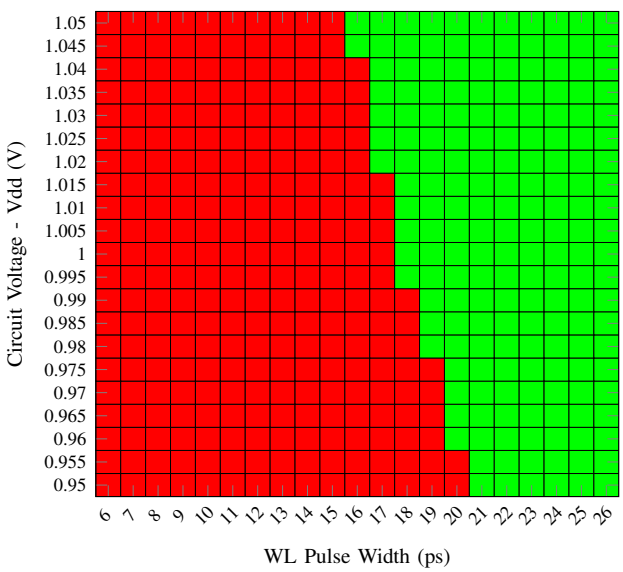

Fig. 8. Shmoo plot of supply voltage versus wordline pulse width for baseline write operation

Fig. 9 shows the effect of Negative Bitline assist. As the bitline voltage becomes more negative, the successful write region expands toward shorter wordline pulse widths. This confirms that the negative bitline improves writeability by increasing the effective access transistor strength.

Fig. 10 shows the effect of column supply collapse. Reducing $V_{DD,col}$ improves the write success region because the pull-up PMOS inside the selected SRAM cell is weakened during the write interval. However, excessive collapse must be avoided in a practical design because it can create disturb or retention concerns for unselected cells.

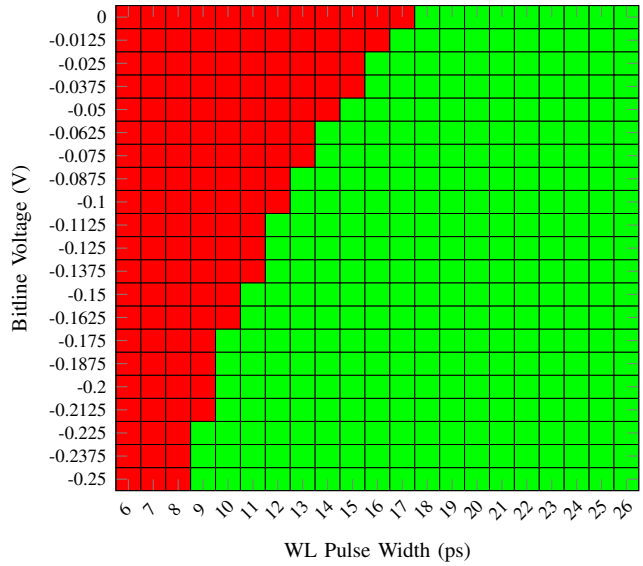

Fig. 9. Shmoo plot of Assisted Negative Bitline voltage versus Wordline pulse width

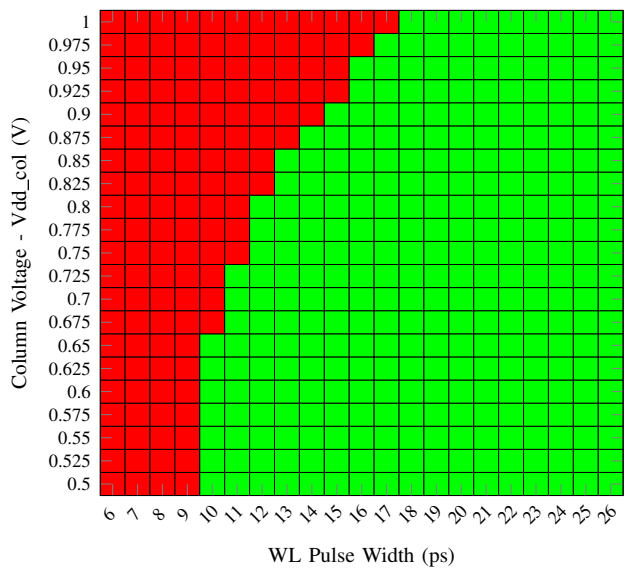

Fig. 10. Shmoo plot of Assisted Collapsed Column Supply (Vdd_col) voltage versus Wordline pulse width

Fig. 11 shows the combined effect of Negative Bitline and column VDD collapse at a fixed wordline pulse width. The green region is significantly larger than the failure region, showing that the two assists complement each other. A moderately negative bitline together with a moderate reduction in $V_{DD,col}$ is sufficient to achieve successful write operation over a wide range of conditions. This agrees with the assist concept reported in [3], where combining both techniques improves write margin more efficiently than using only one aggressive assist.

Overall, the shmoo plots confirm the same trend observed in the transient simulations. Negative Bitline assist improves the

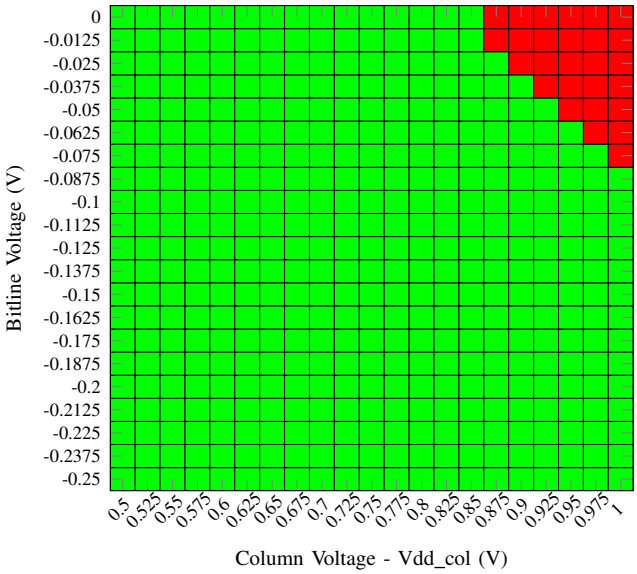

Fig. 11. Shmoo plot for combined Negative Bitline and Column Supply (Vdd_col) Collapse Assist at fixed Wordline pulse width of 13 ps

write path, VDD collapse weakens the cell during the write window, and the combined assist gives the widest successful operating region.

E. Simulation Results of Offset-Compensated Sense Amplifier

Fig. 12 shows the implemented latch-type differential sense amplifier with capacitor-based input offset compensation and output glitch-latch circuitry in Cadence Virtuoso.

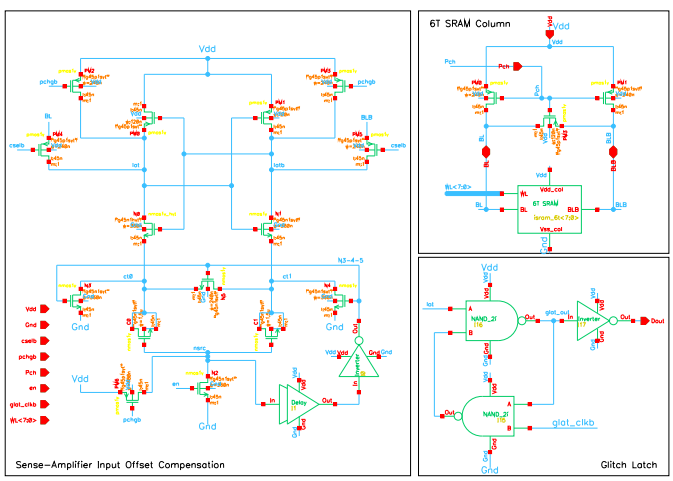

Fig. 12. Schematic of Read Operation using the Sense-Amplifier Input Offset Compensation

The sense amplifier receives the differential bitline inputs BL and BLB from the selected SRAM column through the column select network. During the precharge phase, the internal latch nodes are equalized and the compensation capacitors are charged to store the mismatch-related offset voltage. During the subsequent evaluation phase, the stored compensation voltage is injected back into the latch nodes, thereby reducing the effect of transistor mismatch and improving sensing accuracy. A glitch-latch stage is included at the output to capture the sensed data and suppress transient switching at the dynamic latch output.

Fig. 13 shows the transient simulation waveform during a read-0 operation. Initially, the bitlines are precharged while the precharge control signal is active. After wordline assertion, the selected SRAM cell begins discharging one bitline while the complementary bitline remains near the precharged level, creating a small differential voltage between BL and BLB. Once sufficient bitline separation is developed, the enable signal activates the sense amplifier and the internal source node collapses, causing regenerative amplification of the latch nodes lat and $latb$. The output node $Dout$ then resolves rapidly to logic low, corresponding to the stored read-0 data.

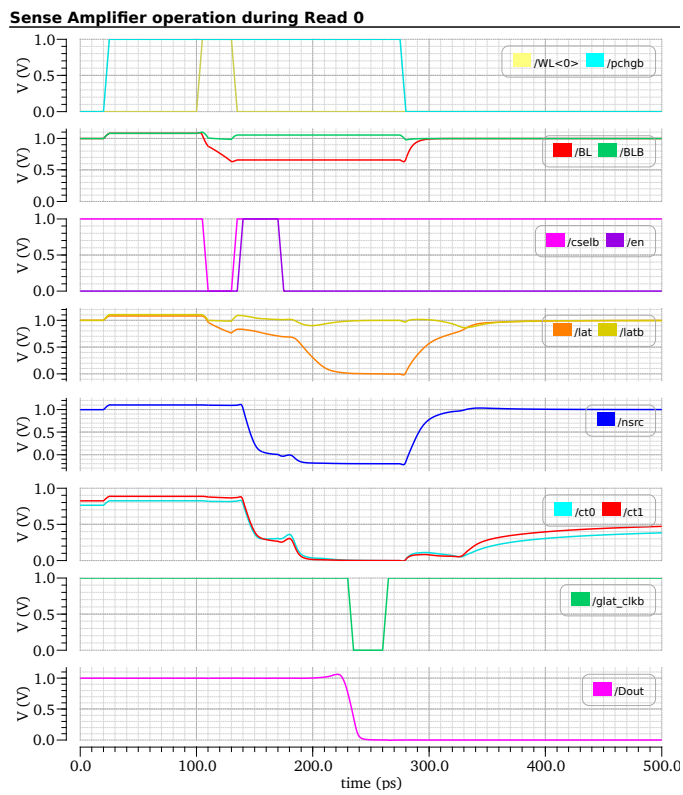

Fig. 13. Waveforms showing the operation of the sense amplifier during Read "0" operation

The simulated waveform confirms correct timing coordination between precharge, column select, wordline activation, sense-amplifier enable, and output latching. The differential bitline swing required before sensing is significantly smaller than full rail swing, demonstrating the speed advantage of latch-based sensing. In addition, the offset compensation nodes `ct0` and `ct1` track the calibration phase and help equalize internal mismatch before evaluation. This improves robustness against local device variation and enables reliable sensing at reduced supply voltage, consistent with previously reported offset-compensated SRAM sense-amplifier techniques [3].

F. Summary of Simulation Results

Transient simulations were performed in Cadence Virtuoso to validate the operation of the proposed SRAM write-assist and sensing circuits. The baseline 6T SRAM cell, Negative Bitline (NBL) assist, combined NBL with VDD Collapse assist, and the offset-compensated sense amplifier were implemented and evaluated. The simulated waveforms confirmed correct timing coordination and successful functional operation of all circuits.

For the write path, the baseline SRAM cell exhibited the largest write delay and lowest operating margin. Negative Bitline assist improved writeability by strengthening the access transistor pull-down path, thereby reducing the write transition time. The combined NBL and VDD Collapse scheme achieved the best performance, since the access path was strengthened while the internal cell restoring contention was simultaneously weakened. For the read path, the latch-type sense amplifier with capacitor-based offset compensation successfully detected small bitline differentials and generated stable full-swing outputs. These results verify that suitable assist circuitry and robust sensing techniques can significantly improve SRAM speed and low-voltage functionality.

VII. Conclusion

This work presented the design and simulation of write-assist and sensing techniques for improved 6T SRAM operation under reduced supply voltage conditions. A baseline SRAM cell was first analyzed, followed by the implementation of Negative Bitline (NBL) assist and a combined NBL with VDD Collapse write-assist scheme. Simulation results showed that both assist methods enhance writeability, while the combined scheme provides the strongest write margin and lowest write delay.

An offset-compensated latch-type sense amplifier was also implemented to improve read reliability under small bitline differentials and device mismatch conditions. The sensing circuit successfully regenerated full-swing output data while maintaining stable output capture through the glitch-latch stage.

Overall, the results demonstrate that combining moderate write-assist methods with robust sensing circuitry is an effective approach for low-voltage SRAM design in scaled CMOS technologies. Future work may include Monte Carlo variation analysis, post-layout parasitic extraction, power characterization, and integration of the proposed circuits into a full SRAM array.

VIII. Contribution of each team member

The contribution of each team member for this project for various tasks is tabulated in Table II.

TABLE II
Task distribution among team members

Task	Team member
Literature survey and reference paper study	Vishal, Johan
6T SRAM cell schematic design	Johan
Negative Bitline assist implementation	Vishal
VDD Collapse assist implementation	Johan
Integration of write-assist circuitry	Vishal, Johan
Latch-type sense amplifier design	Johan
Offset compensation implementation	Vishal
Glitch latch integration	Johan
Write simulation testbench creation	Vishal
Read simulation testbench creation	Johan
Transient simulation and verification	Vishal, Johan
Write delay extraction and comparison	Vishal
Shmoo plot generation and analysis	Vishal
Figures, tables, and plots preparation	Vishal, Johan
Report writing and final review	Vishal, Johan

The complete project repository, including schematics and simulation files, is available at: https://github.com/vishalkevat007/6t-sram-write-assists.git

Acknowledgment

We sincerely thank Dr. Sumeet Kumar Gupta, the course instructor, for his guidance, encouragement, and excellent teaching throughout the semester. The concepts and design methodologies covered in the course provided the foundation required for the successful completion of this project.

References

[1] W. Gul, M. Shams, and D. Al-Khalili, "Sram cell design challenges in modern deep sub-micron technologies: An overview," *Micromachines*, vol. 13, no. 8, p. 1332, 2022.

[2] D. Suneja, N. Chaturvedi, and S. Gurunarayanan, "A comparative analysis of read/write assist techniques on performance & margin in 6t sram cell design," in *2017 International Conference on Computer, Communications and Electronics (Comptelix)*. IEEE, 2017, pp. 659–664.

[3] M. E. Sinangil, J. W. Poulton, M. R. Fojtik, T. H. Greer, S. G. Tell, A. J. Gotterba, J. Wang, J. Golbus, B. Zimmer, W. J. Dally *et al.*, "A 28 nm 2 mbit 6 t sram with highly configurable low-voltage write-ability assist implementation and capacitor-based sense-amplifier input offset compensation," *IEEE Journal of Solid-State Circuits*, vol. 51, no. 2, pp. 557–567, 2015.

[4] S.-L. Wu, K.-Y. Li, P.-T. Huang, W. Hwang, M.-H. Tu, S.-C. Lung, W.-S. Peng, H.-S. Huang, K.-D. Lee, Y.-S. Kao *et al.*, "A 0.5-v 28-nm 256-kb mini-array based 6t sram with vtrip-tracking write-assist," *IEEE Transactions on Circuits and Systems I: Regular Papers*, vol. 64, no. 7, pp. 1791–1802, 2017.

[5] W. Choi and J. Park, "A charge-recycling assist technique for reliable and low power sram design," *IEEE Transactions on Circuits and Systems I: Regular Papers*, vol. 63, no. 8, pp. 1164–1175, 2016.

[6] H. Jeong, S. H. Oh, T. W. Oh, H. Kim, C. N. Park, W. Rim, T. Song, and S.-O. Jung, "Bitline charge-recycling sram write assist circuitry for V_{MIN} improvement and energy saving," *IEEE Journal of Solid-State Circuits*, vol. 54, no. 3, pp. 896–906, 2019.