US 20070072442A1

(19) United States

(12) Patent Application Publication

(10) Pub. No.: US 2007/0072442 A1

(43) Pub. Date: Mar. 29, 2007

DiFonzo et al.

(54) ELECTROMAGNETIC CONNECTOR FOR ELECTRONIC DEVICE

(75) Inventors: **John C. DiFonzo**, Emerald Hills, CA (US); **Bartley K. Andre**, Menlo Park, CA (US); **Kanye Lim**, Sunnyvale, CA (US); **Matthew Dean Rohrbach**, San Francisco, CA (US); **Mark Edward Doutt**, San Jose, CA (US); **Jean-Marc Gery**, Los Angeles, CA (US)

Correspondence Address:
TOWNSEND AND TOWNSEND AND CREW, LLP
TWO EMBARCADERO CENTER
8TH FLOOR
SAN FRANCISCO, CA 94111-3834 (US)

(73) Assignee: **Apple Computer, Inc.**, Cupertino, CA

(21) Appl. No.: **11/235,873**

(22) Filed: **Sep. 26, 2005**

Publication Classification

(51) **Int. Cl.**
H01R 11/30 (2006.01)

(52) **U.S. Cl.** **439/39**

(57) **ABSTRACT**

An electrical plug and receptacle relying on magnetic force from an electromagnet to maintain contact are disclosed. The plug and receptacle can be used as part of a power adapter for connecting an electronic device, such as a laptop computer, to a power supply. The plug includes electrical contacts, which are preferably biased toward corresponding contacts on the receptacle. The plug and receptacle each have a magnetic element. The magnetic element on one of the plug or receptacle can be a magnet or ferromagnetic material. The magnetic element on the other of the plug or receptacle is an electromagnet. When the plug and receptacle are brought into proximity, the magnetic attraction between the electromagnet magnet and its complement, whether another magnet or a ferromagnetic material, maintains the contacts in an electrically conductive relationship.

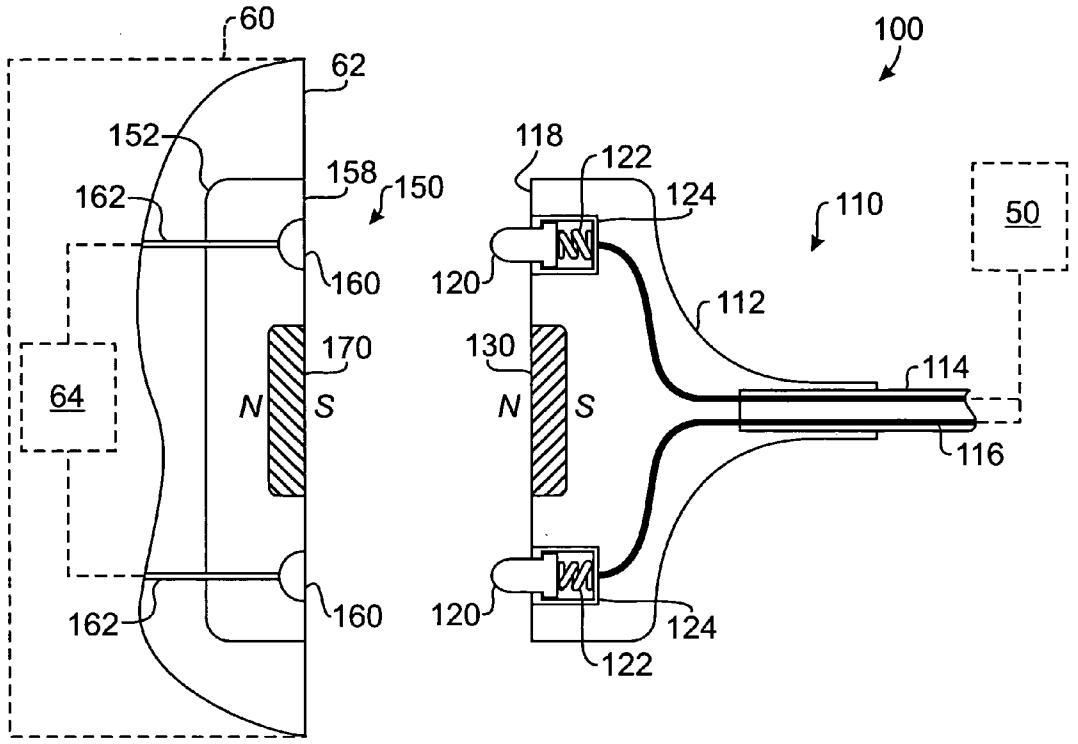

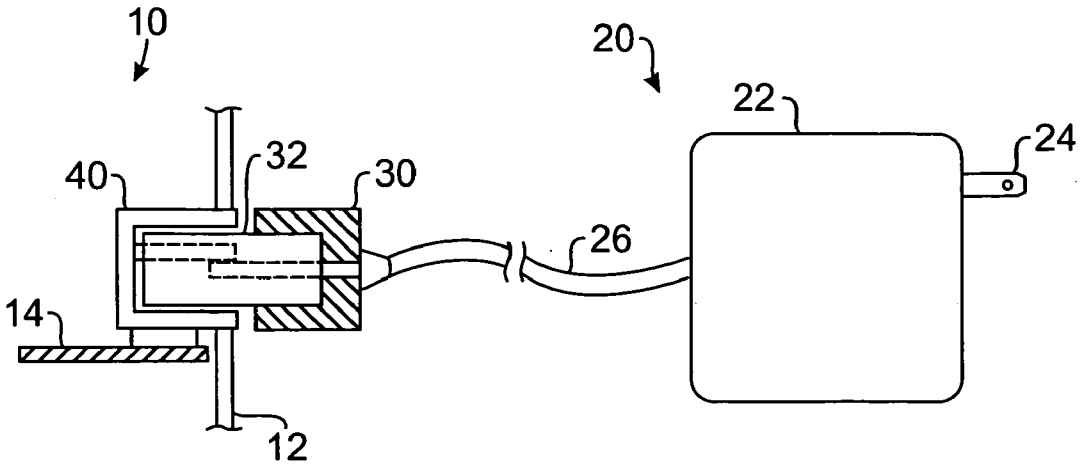

FIG. 1
(Prior Art)

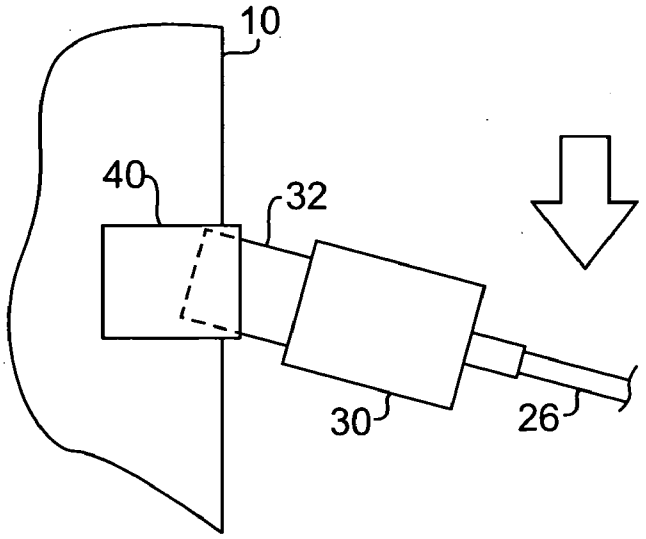

FIG. 2
(Prior Art)

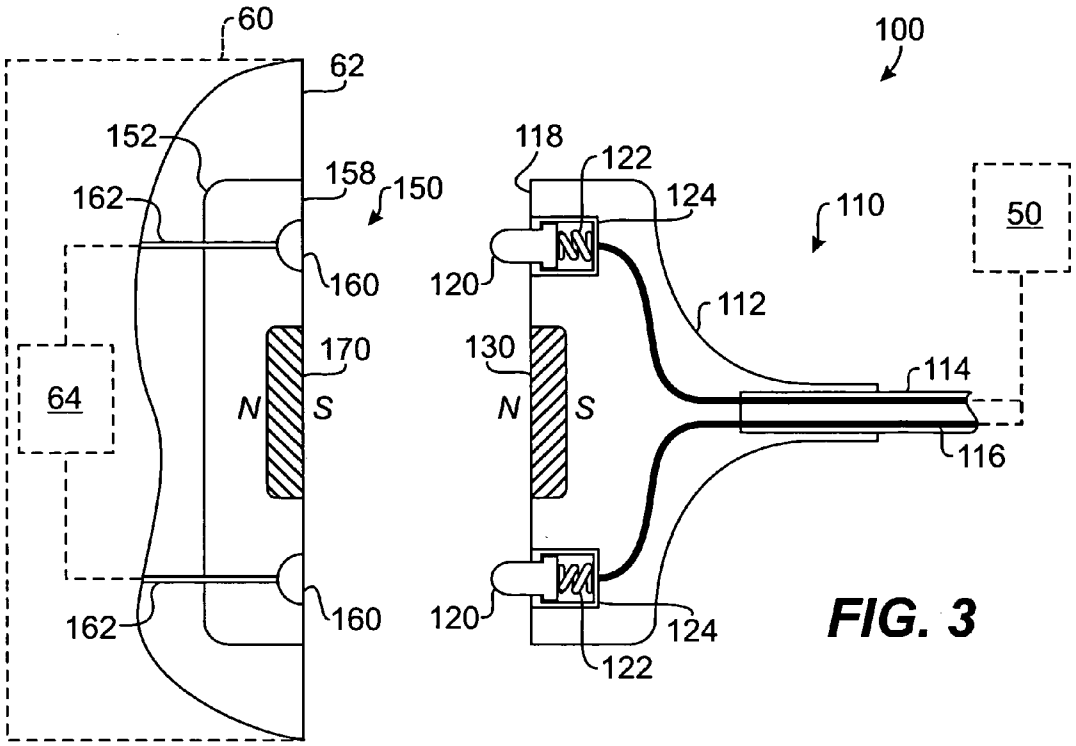

FIG. 3

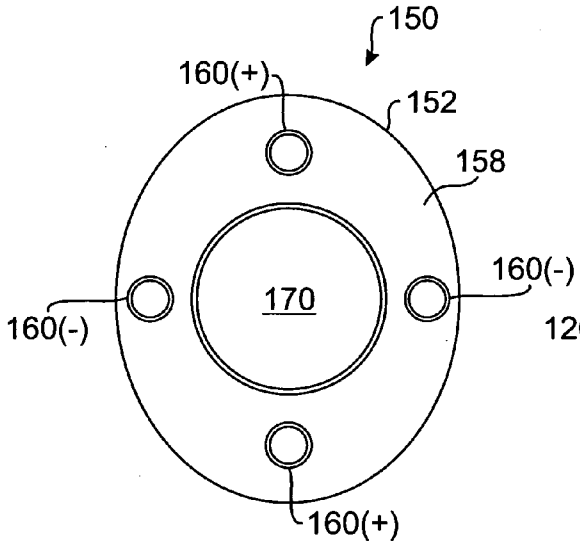

FIG. 4

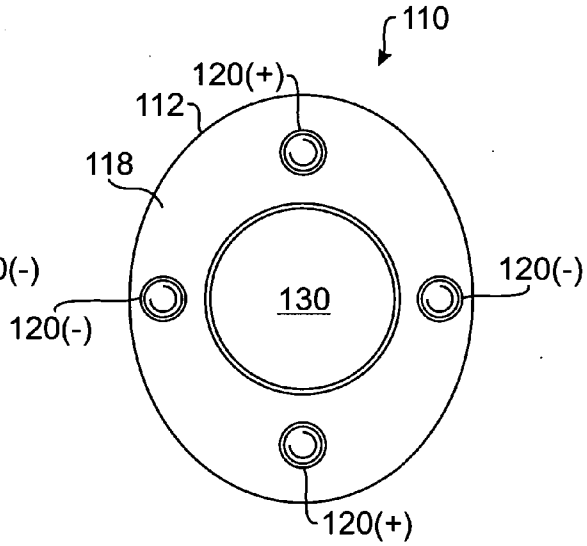

FIG. 5

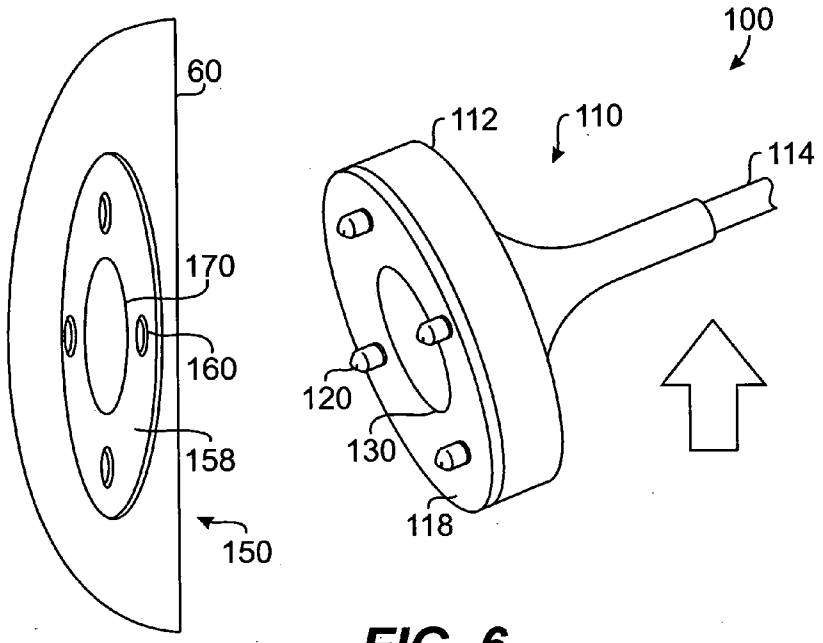
100
60
112
110
114
170
160
120
130
158
118
150

FIG. 6

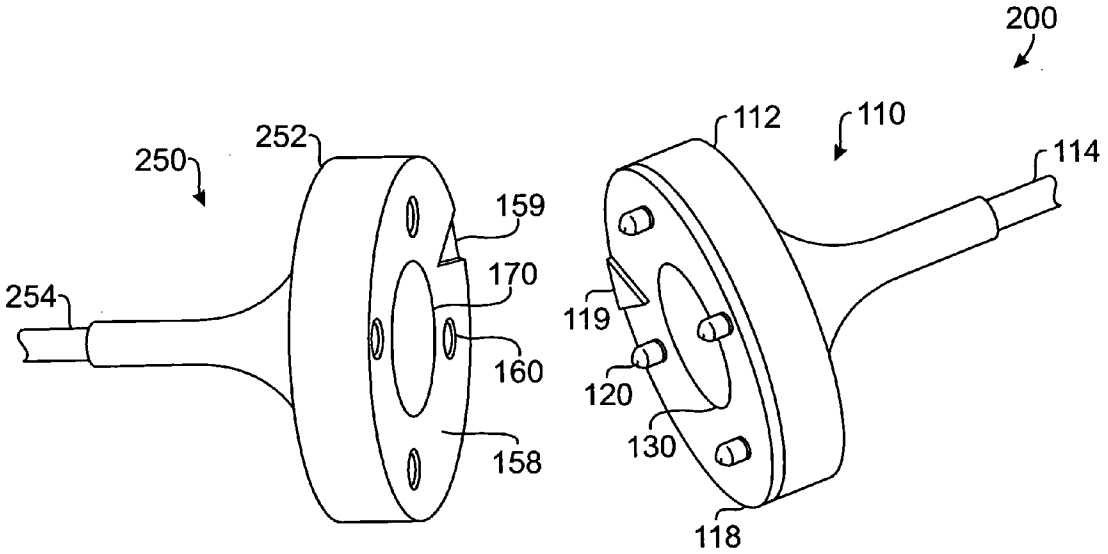
200
250
252
112
110
114
159
170
254
119
160
120
130
158
118

FIG. 7

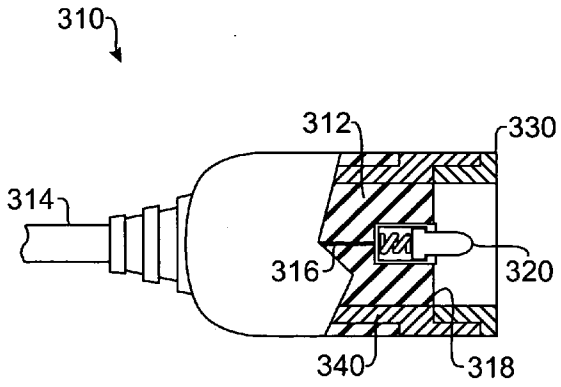

FIG. 8A

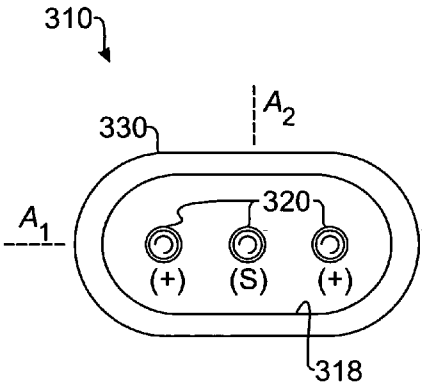

FIG. 8B

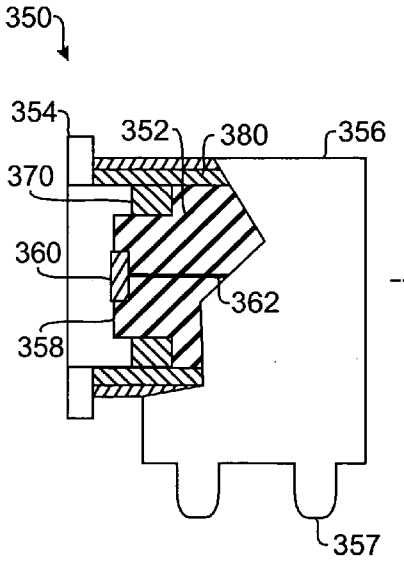

FIG. 9A

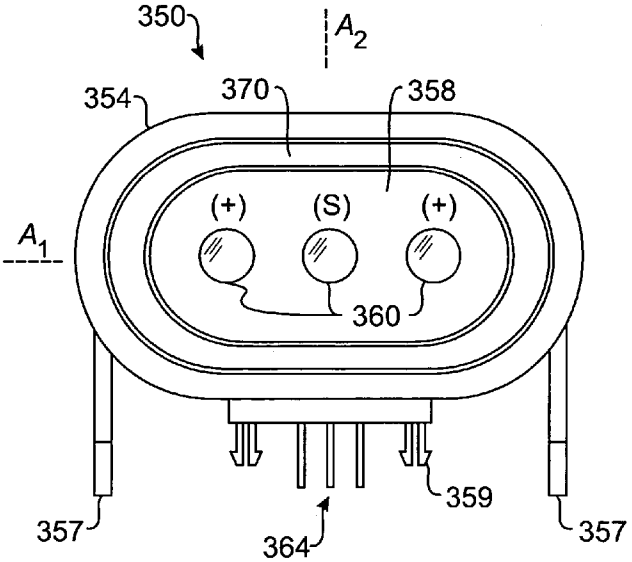

FIG. 9B

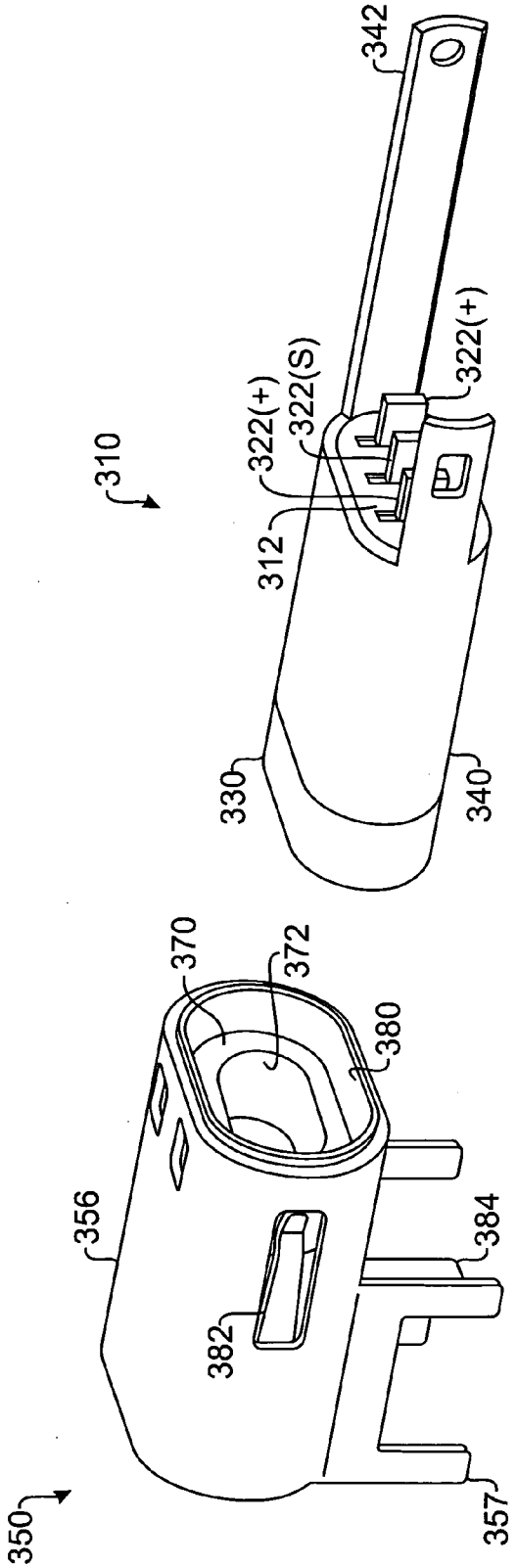

FIG. 10

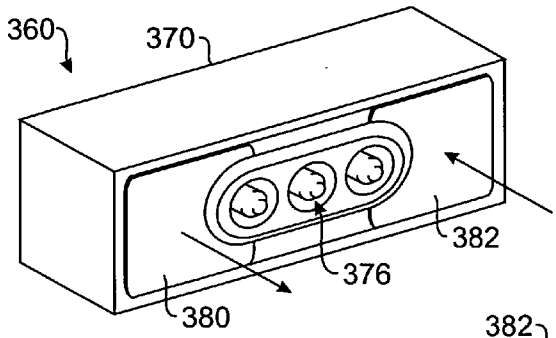

FIG. 11A

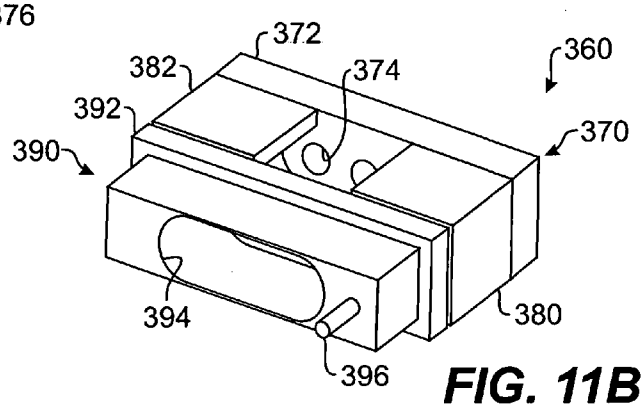

FIG. 11B

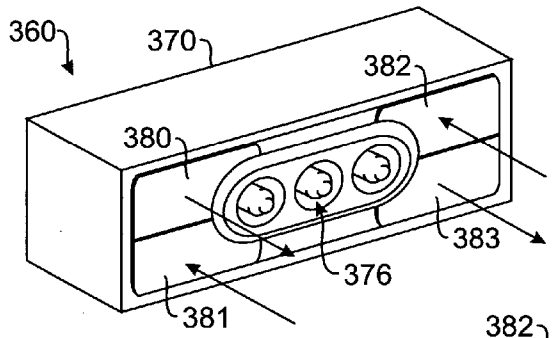

FIG. 12A

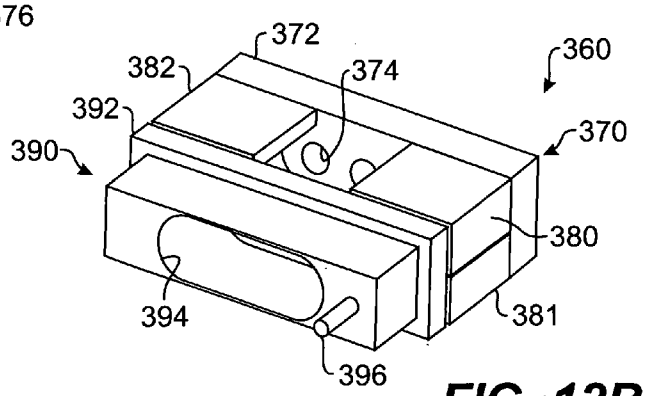

FIG. 12B

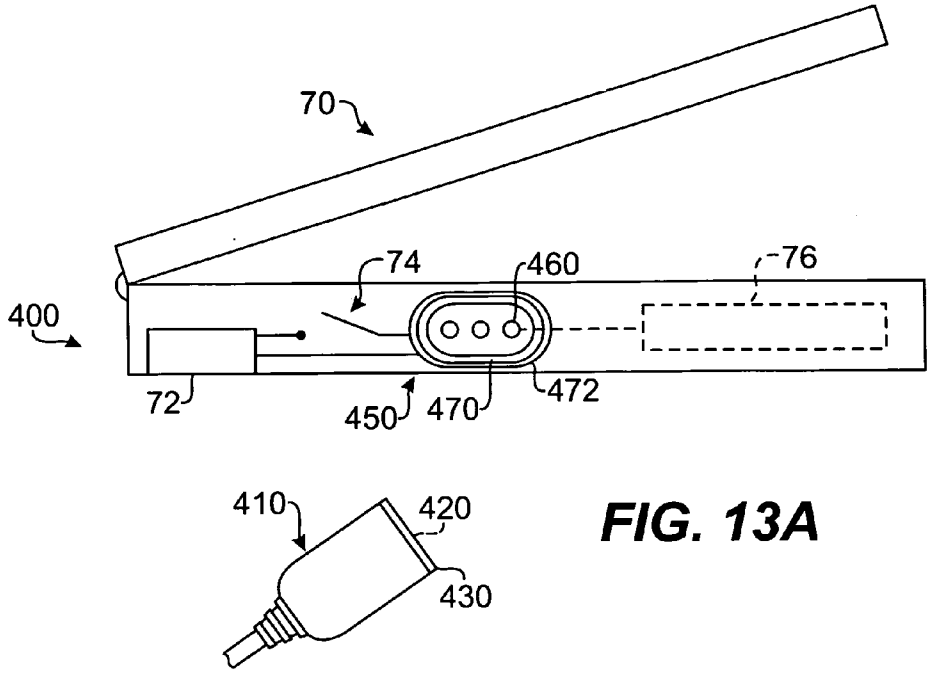

FIG. 13A

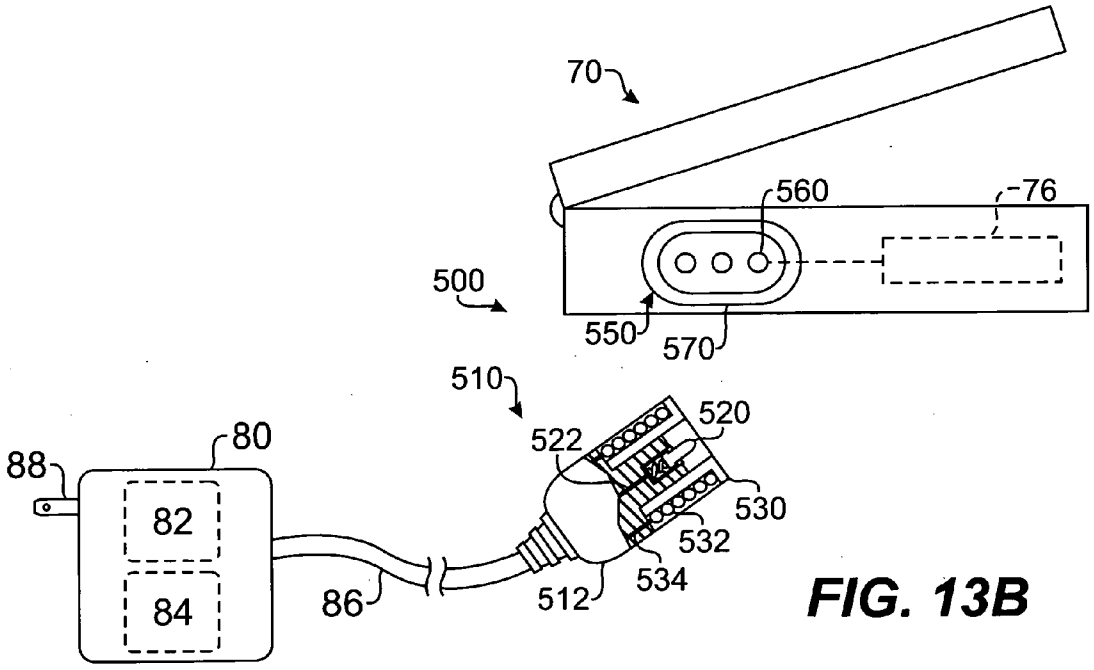

FIG. 13B

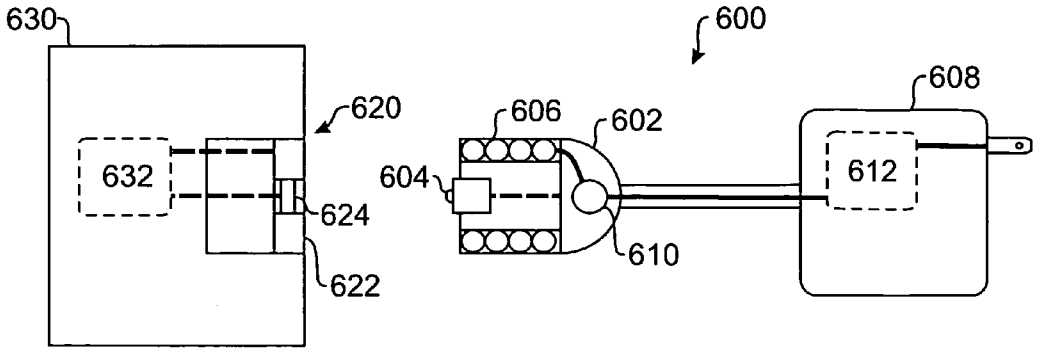

FIG. 14

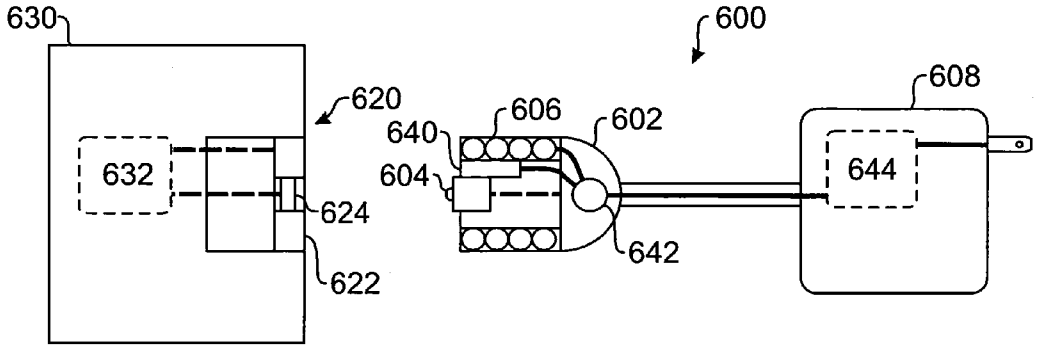

FIG. 15

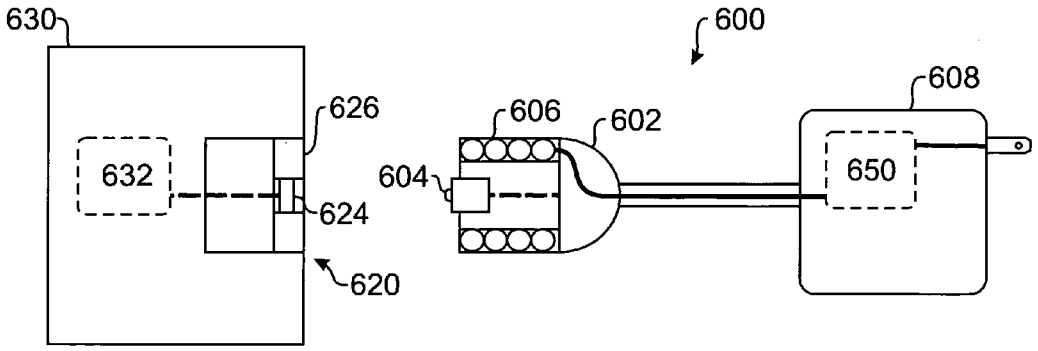

FIG. 16

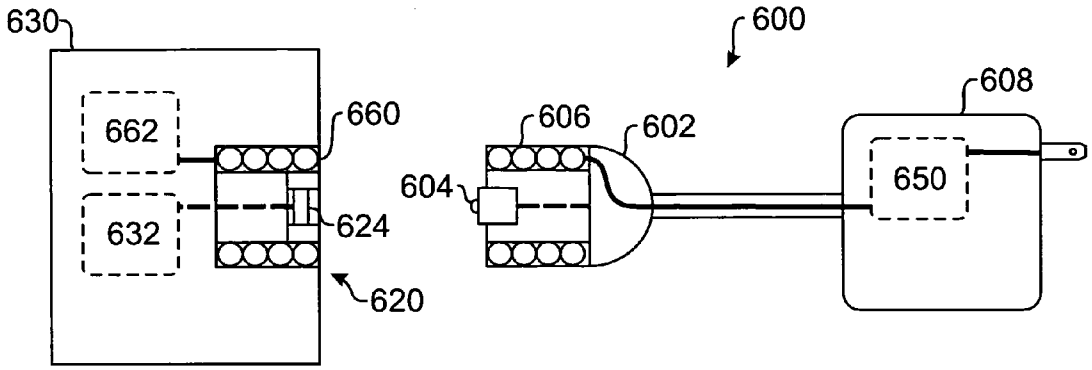
630
662
632
660
624
620
600
606
602
604
608
650

FIG. 17

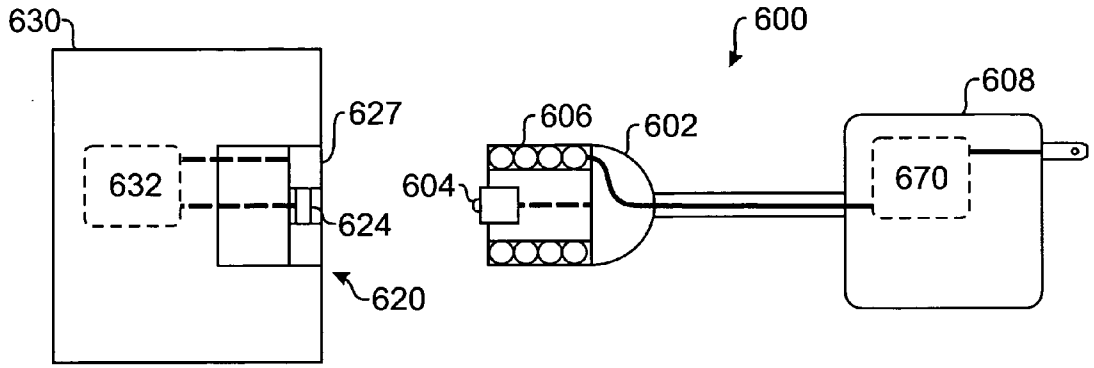
630
632
627
624
620
600
606
602
604
608
670

FIG. 18

ELECTROMAGNETIC CONNECTOR FOR ELECTRONIC DEVICE

CROSS-REFERENCE TO RELATED APPLICATIONS

[0001] This application is filed concurrently with U.S. patent application having U.S. Express Mail No. EV 697139430 US, entitled "Magnetic Connector for Electronic Device," and Attorney Dkt. No. P3593US1/119-0060US, which is incorporated herein by reference in its entirety.

FIELD OF THE DISCLOSURE

[0002] The subject matter of the present disclosure generally relates to a magnetic connector for an electronic device and more particularly relates to an electromagnetic connector for a power adapter connecting a laptop computer to a power supply.

BACKGROUND OF THE DISCLOSURE

[0003] Electronic devices, such as laptop computers, typically use DC power supplied from a transformer connected to a conventional AC power supply. Referring to FIG. **1**, a power adapter **20** according to the prior art is illustrated. The power adapter **20** has a transformer **22**, a power cable **26**, a male connector **30**, and a female connector **40**. The transformer **22** has a plug **24** for connecting to a conventional AC power outlet (not shown), and the male connector **30** is connected to the transformer **22** by power cable **26**. The female connector **40** is typically attached to the housing **12** of an electronic device **10**, such as a laptop computer, and is typically attached to a printed circuit board **14** of the internal electronics of the device **10**. To make the conventional power connection between the transformer **22** and the device **10**, the male connector **30** has a male end **32** that inserts into the female connector **40**. Connectors for portable computers are preferably as small as possible and low profile for today's thin notebooks.

[0004] Damage can occur to the conventional power connection in a number of ways. In one example, simply inserting the male connector **30** into the female connector **40** can cause damage. In another example shown in FIG. **2**, damage can occur when any of the components (e.g., the device **10**, male connector **30**, transformer **22**, etc.) is inadvertently pulled away from other components by a non-axial force while the male and female connectors **30** and **40** are still connected together. In addition to conventional power connections, damage of other types of connections to electronic devices can also occur in the same ways described above.

[0005] In general, the surface area of two magnetically attracted halves determines the number of magnetic flux lines and therefore the holding force between them because the holding force is proportional to the contact area between the two magnetically attracted halves. Thus, to have a strong force holding the two magnetically attracted halves together, the two magnetically attracted halves want to be as large as possible.

[0006] The subject matter of the present disclosure is directed to overcoming, or at least reducing the effects of, one or more of the problems set forth above.

SUMMARY OF THE DISCLOSURE

[0007] A magnetic connector that relies on magnetic force for maintaining contact is disclosed. The magnetic connector includes a plug and a receptacle. In one embodiment, the plug and receptacle can be used as part of a power adapter for connecting an electronic device, such as a laptop computer, to a transformer connectable to a power supply. The plug includes a plurality of electrical pins, which are preferably biased towards a corresponding plurality of contacts positioned on the receptacle. The plug and receptacle each have a magnetic element. The magnetic element on one or both of the plug and receptacle can be a magnet, which is preferably a permanent rare earth magnet although electromagnets may also be used. A ferromagnetic element can be used for the magnetic element on the plug or receptacle that does not include a magnet. When the plug and receptacle are brought into proximity, the magnetic attraction between the magnet and its complement, whether another magnet or a ferromagnetic material, magnetically couples the plug and the receptacle and maintains the pins and contacts in an electrically conductive relationship. The magnetic connector allows the plug to break away from the receptacle if the plug or receptacle is inadvertently moved (with sufficient force) while still connected.

[0008] The foregoing summary is not intended to summarize each potential embodiment or every aspect of the present disclosure.

BRIEF DESCRIPTION OF THE DRAWINGS

[0009] The foregoing summary, preferred embodiments, and other aspects of subject matter of the present disclosure will be best understood with reference to a detailed description of specific embodiments, which follows, when read in conjunction with the accompanying drawings, in which:

[0010] FIG. **1** illustrates a power adapter having a power connection according to the prior art.

[0011] FIG. **2** illustrates a type of possible damage resulting from the prior art power connection.

[0012] FIG. **3** illustrates a cross-sectional view of an embodiment of a magnetic connector according to certain teachings of the present disclosure.

[0013] FIG. **4** illustrates a front view of a receptacle of the magnetic connector of FIG. **3**.

[0014] FIG. **5** illustrates a front view of a plug of the magnetic connector of FIG. **3**.

[0015] FIG. **6** illustrates an ability of the disclosed magnetic connector to prevent possible damage.

[0016] FIG. **7** illustrates an alternative embodiment of the magnetic connector of FIG. **3**.

[0017] FIGS. **8**A-**8**B illustrate a plug of another embodiment of a magnetic connector according to certain teachings of the present disclosure.

[0018] FIGS. **9**A-**9**B illustrate a receptacle for the plug of the disclosed magnetic connector of FIGS. **8**A-**8**B.

[0019] FIG. **10** illustrates a perspective view of the plug and receptacle for the disclosed magnetic connector of FIGS. **8**A-**8**B and **9**A-**9**B.

[0020] FIGS. **11**A-**11**B illustrate an embodiment of a magnetic connector according to certain teachings of the present disclosure having a plurality of magnets and a back plate.

[0021] FIGS. **12**A-**12**B illustrate another embodiment of a magnetic connector according to certain teachings of the present disclosure having a plurality of magnets and a back plate.

[0022] FIGS. **13**A-**13**B illustrate embodiments of magnetic connectors according to certain teachings of the present disclosure having electromagnets.

[0023] FIG. **14** illustrates an embodiment of a magnetic connector according to certain teachings of the present disclosure having an electromagnet and switch element.

[0024] FIG. **15** illustrates an embodiment of a magnetic connector according to certain teachings of the present disclosure having an electromagnet and a proximity sensor.

[0025] FIG. **16** illustrates an embodiment of a magnetic connector according to certain teachings of the present disclosure having an electromagnet and fault detector.

[0026] FIG. **17** illustrates an embodiment of a magnetic connector according to certain teachings of the present disclosure having two electromagnets and fault detector.

[0027] FIG. **18** illustrates an embodiment of a magnetic connector according to certain teachings of the present disclosure having an electromagnet and control circuitry.

[0028] While the disclosed magnetic connectors are susceptible to various modifications and alternative forms, specific embodiments thereof have been shown by way of example in the drawings and are herein described in detail. The figures and written description are not intended to limit the scope of the inventive concepts in any manner. Rather, the figures and written description are provided to illustrate the inventive concepts to a person skilled in the art by reference to particular embodiments, as required by 35 U.S.C. § 112.

DETAILED DESCRIPTION

[0029] Referring to FIG. **3**, an embodiment of a magnetic connector **100** according to certain teachings of the present disclosure is illustrated in a cross-sectional view. The magnetic connector **100** includes a first connector or plug **110** and a second connector or receptacle **150**. The plug **110** is connectable to a first device or electrical relation **50**, while the receptacle **150** is connectable to a second device **60**. In one embodiment, the first device **50** is a transformer, and the second device **60** is an electronic device, such as a laptop computer, having a housing **62** and internal electronics **64**. Therefore, in one embodiment, the magnetic connector **100** can be part of a power adapter for connecting the laptop computer **60** to a conventional AC power supply (not shown) with the transformer **50**. For a standard laptop computer, the magnetic connector **100** is preferably rated for 6 A at 24V, and the plug **110** and receptacle **150** can both be approximately 4-mm tall and 6-mm wide.

[0030] The plug **110** includes a plug body **112** having a face **118** and connected to a cable **114**. Preferably, the body **112** is composed of a conventional non-conductive material. The body **112** houses internal wires **116** of the cable **114**, which connects to the first device **50**. A plurality of first electrical contacts **120** and a first magnetic element **130** are positioned on the plug body **112**. In a preferred embodiment and as shown in FIG. **3**, the first electrical contacts **120** are preferably plated and spring loaded pins to maintain contact with the corresponding contacts on the receptacle **150**. The pins **120** are held in housings **124** and are connected to the wires **116** of the cable **114**. Springs **122** bias the pins **120** so that they extend from the face **118** of the plug body **112**. In the present embodiment, the first magnetic element **130** is embedded in the face **118** of the plug body **112**.

[0031] The receptacle **150** has a body **152** connected to the housing **62** of the second device **60**. The body **152** has a face **158**, a plurality of second electrical contacts **160**, and a second magnetic element **140**. In a preferred embodiment and as shown in FIG. **3**, the second electrical contacts **160** are plates embedded in the face **158** of the body **152** and electrically connected to the internal electronics **64** by wires **162** or the like. In addition, the second magnetic element **170** is embedded in the face **118** of the body **152**.

[0032] To make the electrical connection between the first and second devices **50** and **60**, the face **118** of the plug **110** is positioned against the face **158** of the receptacle **150**. The pins **120** on the plug **110** engage the plates **160** on the receptacle **150**. Thus, the wires **116** connected to the first device **50** are electrically connected to the wires **162** connecting to the internal electronics **64** of the second device **60**. As will be appreciated by one skilled in the art, electrical connection between pointed pins **120** and substantially flat plates **160** is preferred for a number of reasons, such as issues related to Hertzian stresses around a contact point and issues related to contact asperities or aspots.

[0033] To maintain the electrical connection, the attractive force between the first and second magnetic elements **130** and **170** holds the plug **110** to the receptacle **150**. In one embodiment, both magnetic elements **130** and **170** are magnets, either permanent or electromagnetic, arranged to attract magnetically to one another. In an alternative embodiment, either magnetic element **130** or **170** is a magnet, either permanent or electromagnetic, while the other complementary element is a ferromagnetic material. The permanent magnet used for the magnetic elements is preferably a permanent rare earth magnet because rare earth magnets have a high flux density compared to their size. When the plug **110** and receptacle **150** are brought into proximity, the attractive force between the magnetic elements **130** and **170** maintains the contacts **120** and **160** in an electrically conductive relationship.

[0034] The magnetic attraction or force of the plug **110** coupled to the receptacle **150** can be configured for a particular implementation as desired. For embodiments of the magnetic connector **100** used for a power adapter, the magnetic field produced by the magnetic attraction between the elements **130** and **170** is small enough not to interfere with the supply of power through the electrical contacts **120** and **160**. Because magnetic fields of the elements **130** and **170** may interfere with the internal electronics **64** and other components of the device **60**, the receptacle **150** may be positioned on the housing **150** at a location away from various components. For example, the receptacle **150** may be positioned away from disk drives, USB ports, internal busses, etc. of a laptop computer. Alternatively, the elements **130** and **170** may be shielded from various components of the electronic device, or a flux bar may be used to direct any magnetic flux of the elements **130** and **170** away from various components.

[0035] In one embodiment shown in the front view of FIG. **4**, the receptacle **150** has four electrical plates **160** positioned

around the centrally located magnetic element **170**. The body **152** of the receptacle is oval or oblong and has two axes of symmetry. For the embodiment of the receptacle **150** requiring DC power, two of the electrical plates **160**(+) may be positive contacts, and two of the plates **120**(−) may be negative contacts. Various arrangements are possible and would be within the abilities on one skilled in the art.

[**0036**] In the embodiment shown in the front view of FIG. **5**, the plug **110** is made to correspond with the arrangement of the receptacle **150** in FIG. **4**. Therefore, the body **112** of the plug **110** is also oval, and the plug has four pins **120** positioned around the magnetic element **130**, which is centrally located on the plug **110**. For the embodiment of the plug **110** connected to an AC to DC transformer, two of the electrical contacts **120**(+) are positive contacts, and two of the contacts **120**(−) are negative contacts.

[**0037**] The arrangement of the pins **120** and plates **160** is symmetrical along the axes of symmetry defined by the oval or oblong shape of the bodies **112** and **152**. In this way, the plug **110** and receptacle **150** can be coupled in only two ways, and proper alignment of positive pins **120**(+) with positive plates **160**(+) and of negative pins **120**(−) with negative plates **160**(−) will be ensured. Although the plug **110** and receptacle **150** are shown having one magnetic element **130** and **170** each, it will be appreciated that each can include one or more magnetic elements. In addition, it will be appreciated that the plug **110** and receptacle **150** can each have one or more contacts, depending on the type of electrical connection to be made. For example, additional pins and contacts may be symmetrically arranged around the plug **110** and receptacle **150** for passing electrical signals between two devices, such as a laptop computer and power adapter.

[**0038**] Referring to FIG. **6**, an ability of the magnetic connector **100** to prevent possible damage is illustrated. The magnetic connector **100** substantially avoids damage because male components are not required to have an interference fit with female components to maintain both electrical and mechanical connection. Instead, a user of the connector **100** needs only to position the faces **118** and **158** of the plug **110** and receptacle **150** against or away from one another when making or releasing the electrical and magnetic connection therebetween. Being biased towards plates **160**, the pins **120** can avoid damage while still maintaining contact with the plates **160**. In addition, the magnetic connector **100** can substantially avoid damage by allowing the plug **110** and receptacle **150** to break free of one another when inadvertently pulled away from each other by a non-axial force. Although shown slightly recessed in the device **60**, the face **158** of the receptacle **150** can also be flush with the housing or can protrude therefrom. However, the recess is used to prevent stray magnetic fields from interfering with other devices.

[**0039**] Referring to FIG. **7**, another embodiment of a magnetic connector **200** according to certain teachings of the present disclosure is illustrated. This embodiment is substantially similar to the embodiment of FIGS. **3** through **5** so that like reference numbers indicate similar components. In contrast to previous embodiments, the receptacle **250** in this embodiment is not housed in a device (not shown) to which it is connected as with previous embodiments. Rather, the receptacle **250** resembles the plug **110** in that it has a body **252** that connects to the device with a cable **254**. In addition, the bodies **112** and **252** of the plug **110** and receptacle **150** are substantially round. To ensure proper alignment of the pins **120** with the plates **160**, the plug **10** and receptacle **150** have complementary guides **119** and **159** that allow for only one way of coupling them together. Although the guides **119** and **159** are shown on the faces **118** and **158** of the plug **110** and receptacle **150**, it will be appreciated by one skilled in the art that a number of guides and techniques can be used to ensure proper alignment.

[**0040**] Referring to FIGS. **8**A-**8**B and **9**A-**9**B, another embodiment of a magnetic connector according to certain teachings of the present disclosure is illustrated. A first connector or plug **310** of the magnetic connector is shown in a partial side cross-section and in a front view of FIGS. **8**A-**8**B. A second connector or receptacle **350** of the magnetic connector is shown in a partial side cross-section and in a front view of FIGS. **9**A-**9**B. Both the plug **310** and receptacle **350** can be at least partially composed of transparent, non-conductive material and can include internal lights, such as LEDs, to illuminate them.

[**0041**] As shown in FIGS. **8**A-**8**B, the plug **310** includes a body **312**, a plurality of pins **320**, and a first magnetic element **330**, and a shell **340**. The body **312** is made of any suitable non-conductive material and has an oblong shape with two axes of symmetry A_1 and A_2. The body **312** houses internal wires **316** of a cable **314**, which connect the pins **320** to a first device (not shown), such as a transformer, for example. The pins **320** are biased by springs, and the pins **320** extend from a face **318**, which is slightly recessed in the plug body **312**. The first magnetic element **330** is positioned on the end of the plug body **312**. As best shown in FIG. **8**B, the first magnetic element **330** surrounds the recessed face **318** of the body **318**.

[**0042**] For the embodiment of the plug **310** connected to a transformer, the centrally located pin **320** can be designated for signals used by the electronic device to determine the type of transformer or other device attached by the plug **310**. The two outer located pins **320** can be designated for the positive DC power, and the outer shell **340** is designated for the return path of DC power. In this way, any orientation of the plug **310** will ensure proper connection of positive pins **320**(+) and signal pin **320**(S) of the plug **310** with corresponding contacts of the receptacle (**350**; FIGS. **9**A-**9**B). Using the outer shell **340** for the return path is preferred because the plug **310** can have a smaller profile. In an alternative embodiment, however, the return path can be provided by additional pins (not shown) on the plug **310** and receptacle **350**. For example, two additional pins (not shown) for the additional return path could be provided and symmetrically arranged on the plug **310** such that the pins would only align with corresponding contacts (not shown) of the receptacle **350** regardless of the orientation in which the plug **310** is coupled to the receptacle **350**.

[**0043**] As shown in FIGS. **9**A-**9**B, the receptacle **350** has a body **352**, a plurality of contacts **360**, and a second magnetic element **370**, and a shell **380**. The body **352** has a casing **356** with legs **357** for mechanical connection to a printed circuit board of internal electronics of a second device (not shown), such as a laptop computer, for example. The casing **356** can be composed of a conductive or non-conductive material. The body **352** has an oblong shape with

two axes of symmetry A_1 and A_2 and is made of any suitable non-conductive material. As best shown in FIG. **9**B, the body **352** also has snap connectors **359** for mechanical connection to a mounting base (not shown). In addition, the receptacle **350** has pins **364** for connecting the contacts **360** to internal electronics of the device.

[**0044**] The body **352** has an end **354** intended to extend outside the device housing the receptacle **350**. This end **354** may be illuminated by techniques known in the art. The contacts **360** are positioned in a face **358** of the body **352**. In the present embodiment, the contacts **360** are substantially flat plates electrically connected to the pins **364** by wires **362**. The second magnetic element **370** is positioned about the face **358**, and the second magnetic element **370** is preferably recessed from the face **358**. Preferably, the recess of the second magnetic element **370** is slight and is comparable to the recess of the face (**318**) of the plug (**310**) in FIG. **8**A. For the embodiment of the receptacle **350** intended to connect DC power to the device, the plates **360** are arranged to correspond with the positive pins (**320**(+)) and signal pin (**320**(S)) of the plug (**310**) of FIGS. **8**A-**8**B, as described previously.

[**0045**] To make the electrical connection, the face **318** of the plug **310** of FIG. **8**A is positioned against the face **358** of the receptacle **350** of FIG. **9**A. The pins **320** on the plug **310** engage the plates **360** on the receptacle **350**. To maintain the connection, the first and second magnetic elements **330** and **370** magnetically couple together and hold the plug **310** to the receptacle **350**. In one embodiment, the magnetic elements **330** and **370** are both permanent magnets (preferably rare earth magnets) arranged to magnetically couple together. In another embodiment, one of the magnetic elements **330** and **370** can be a permanent magnet (preferably a rare earth magnet) or an electromagnet while the other element is a ferromagnetic material. Once coupled, the magnetic connector **300** allows the plug **310** to break away from the receptacle **350** in the event of inadvertent pulling of the plug **310** or the like.

[**0046**] Referring to FIG. **10**, additional details of the plug **310** and receptacle **350** for the disclosed magnetic connector of FIGS. **8**A-**8**B and **9**A-**9**B are illustrated in a perspective view. Portions of the plug **310** and receptacle **350** are not illustrated so that various details can be better shown. On the plug **310**, the shell **340** abuts the magnetic element **310**, which can be a ferromagnetic material. The shell **340** has an extension **342** for connecting to the return path of the power supply from the adapter (not shown) to which the plug **310** is connected. Three connectors **322**(+), **322**(S), and **322**(+) extend from the back end of the body **312** for connecting the pins (not shown) with the positive power and signal from adapter to which the plug **310** is connected.

[**0047**] On the receptacle **350**, the shell **380** for the return path of the power is positioned within the casing **356**, and the magnetic element **370**, which can be a permanent magnet, is positioned within the shell **380**. An opening **372** through the magnetic element **370** allows for passage of body material (not shown) and contacts (not shown), as disclosed previously. Tabs or holders **382** of the shell **380** contact and hold the magnetic element **370**. A leg **384** of the shell **380** extends from the receptacle **350** as do legs **357** of the casing **356**.

[**0048**] When the plug **330** is coupled with the receptacle **350**, the ferromagnetic material **330** of the plug **310** positions against the permanent magnet **370** and the inside of the casing **380** of the receptacle **350**. Thus, the magnetic engagement between the ferromagnetic material **330** and the permanent magnet **370** holds the plug **310** to the receptacle. Moreover, the physical engagement between the ferromagnetic material **330** and the casing **380** creates the return path for power from the receptacle's shell pin **384** to the plug's shell pin **342**.

[**0049**] Referring to FIGS. **11**A-**11**B, an embodiment of a magnetic connector **360** according to certain teachings of the present disclosure is illustrated. The connector **360** is compact and preferably has a low profile. In FIG. **11**A, a plug **370** of the connector **360** is shown in a front perspective. In FIG. **11**B, some of the internal components of plug **370** and a receptacle **390** are shown in a back perspective. The receptacle **390** is housed in an electronic device (not shown), and the plug **370** attaches to a cord or the like (not shown). As best shown in FIG. **11**A, the plug **370** has magnets **380**, **382** positioned on both sides of a plurality of contacts **376**, which are similar to other contacts disclosed herein. For example, the central contact **376** is designated for a first path of electrical communication, and the two outer contacts **376** are designated for a second path of electrical communication. Preferably, the contacts **376** are biased pins where the central pin **376** carries a signal path and the two side pins carry a positive current. The magnets **380**, **382** are arranged with opposite polarities, as indicated by the direction of the arrows in FIG. **11**A. Preferably, the magnets **380**, **382** are also designated for a third path of electrical communication.

[**0050**] As best shown in FIG. **11**B, the plug **370** also has a back plate **372** connected between the back ends of the magnets **380**, **382**. The back plate **372** is made of a ferromagnetic material, such as steel. The receptacle **390** has an attraction plate **392** also made of a ferromagnetic material, such as steel. When the attraction plate **392** of receptacle **390** is attracted to the magnets **380**, **382**, the magnetic field lines travel through the steel attraction plate **392** from one magnet to the other, completing the magnetic circuit and producing a strong attracting force.

[**0051**] The attraction plate **392** of receptacle **390** defines an opening **394** for passage of the electrical contacts (not shown in FIG. **11**B). Likewise, the back plate **372** of the plug **370** defines openings **374** for passage of leads from the electrical contacts (not shown). As noted above, the magnets **380**, **382** can form a path of electrical communication between the receptacle **390** and the plug **370**. Preferably, the magnets **380** and **382** and the attraction plate **392** carry negative current. Thus, the attraction plate **392** of the receptacle **390** includes a connector **396** for connecting to an electrical lead or the like (not shown).

[**0052**] Because the connector **360** is designed to be compact and have a low profile for fitting into a laptop or the like, the plates **372** and **392** must give up a certain amount of material to produce the openings **374** and **394**. When the attraction plate **392** and magnets **380**, **382** are coupled, magnetic attractive force can be limited because the flux density can saturate the narrower portions of ferromagnetic material in both the attraction plate **392** and the back plate **374**. (Therefore, it may be desirable to use more than two magnets with the connector, as disclosed in the embodiment below). It may be desirable to have more than two magnets within the connector for two reasons. First, magnetic

strength is a function of magnet thickness to cross section ratio (with thickness being defined by the dimension along the direction of magnetization). Second, for a given envelop, the leakage field associated with more than two permanent magnets is less than the leakage field associated with one or two permanent magnets.

[0053] Referring to FIGS. **12**A-**12**B, another embodiment of a magnetic connector **360** according to certain teachings of the present disclosure is illustrated. The magnetic connector **360** in FIGS. **12**A-**12**B is substantially similar to that disclosed above so those like numerals indicate similar components between the embodiments. In the present embodiment, however, the plug **370** houses four magnets **380**, **381**, **382**, and **383**. Again, the magnets **380**, **381**, **382**, and **383** are arranged with opposite polarities, as indicated by the arrows in FIG. **12**A. In the present embodiment, the four magnets **380**, **381**, **382**, and **383** form four magnetic circuits for the travel of magnetic flux. Accordingly, most of the flux travels between magnets on the same side (e.g., between magnets **380**, **381** on the same side and between magnets **382**, **383** on the same side). Because the flux lines are not constrained by the narrow portions of the plates **372** and **392**, the flux density is less likely to saturate the plates **372** and **392**. Therefore, the magnetic attractive force between the receptacle **390** and the plug **370** having four magnets **380**-**384** can be significantly greater than available in the embodiment of FIGS. **11**A-**11**B, even though both embodiments have the same contact area.

[0054] As noted previously, the magnetic attraction or force coupling the plug **370** and the receptacle **390** can be configured as desired for a given implementation. In one embodiment, a straight pullout force to uncouple the plug **370** from the receptacle **390** is preferably between 3-lbf and 7-lbf. It should be noted that pulling the plug **370** out sideways, up, or down can produce torque. Preferably, the magnetic attraction produces less torque in the up direction but produces more torque in the other directions. Target torque values can be 0.5 kgf-cm for the up direction and 0.7 to 1.5 kgf-cm in the other directions.

[0055] In one aspect, the asymmetrical torque values can be achieved by extending the upper magnets **380** and **382** upwards. In this way, the upper magnets **380** and **382** are stronger and provide more attraction upwards than the lower magnets **381** and **383**. One resulting effect is that there can be more holding force and displacement of the application point of the force upward, subsequently leading to more torque. This also helps compensate for any downward torque that may be produced by a cable (not shown) coupled to the plug **370**. In another aspect, the asymmetrical torque values can be achieved by changing the angle of the magnetic flux lines in the upper magnets **380** and **382**. For example, the separate, upper magnets **380** and **382** can have flux direction that point downward at an approximately 20-degree angle in comparison to the direction of coupling.

[0056] Referring to FIG. **13**A, an embodiment of a magnetic connector **400** having an electromagnet is illustrated. The connector **400** includes a plug **410** and a receptacle **450**. The plug **410** is not substantially different from that disclosed in the embodiment of FIG. **8**A-**8**B. The plug **410** has contacts **420** for conveying power from a transformer (not shown) and has a magnetic element **430**, which can be a ferromagnetic material. The receptacle **450** has contacts **460** for conveying power to internal electronics **76** of the device **70**, which is a laptop computer in the present embodiment.

[0057] In contrast to previous embodiments, the receptacle **450** has an electromagnet formed by a metal core **470** wrapped by a wire coil **472**. Using an electromagnet in the plug **410** or receptacle **450** can overcome some of the disadvantages of having a permanent magnet on either the plug **410** or receptacle **450**. For example, the electromagnet may reduce potential interference with internal components of the electronic device **70** or storage media.

[0058] The coil **472** is connected to a power supply or battery **72** of the laptop **70**, and an internal switch **74** among other electronics can be used to operate the electromagnet of the core **470** and coil **472**. The internal switch **74** causes power from the battery **72** to energized the electromagnet of core **470** and coil **472**. Consequently, the energized electromagnet produces a magnetic field that attracts the ferromagnetic material **430** of the plug **410** and that can hold the plug **410** to the receptacle **450**. The battery **72** can be an independent battery of the device or can be the same battery used to power the internal electronics **76** of the device **70**. In either case, operation of the internal switch **74** and other electronics for connecting the battery **72** to the electromagnetic is preferably controlled to conserve power consumption of the battery **72**.

[0059] Referring to FIG. **13**B, another embodiment of a magnetic connector **500** having an electromagnet is illustrated. The connector **500** includes a plug **510** and a receptacle **550**. The receptacle **550** is not substantially different from that disclosed in the embodiment of FIG. **9**A-**9**B. The receptacle **550** has contacts **560** for conveying power and signals to internal electronics **76** of the device **70**. The receptacle **550** also has a magnetic element **570**, which can be a ferromagnetic material. The plug **510** has contacts **520** for conveying power and signals from a power supply, such as power adapter **80**, via wires **522** of a cable **86**. In contrast to previous embodiments, the plug **510** has an electromagnet formed by a metal core **530** wrapped by a wire coil **532**. The coil **532** is connected to a power supply by wires **534**. For example, the coil **532** can draw power output from the transformer **82** of the adapter **80**, form a conventional power supply to which the outlet plug **88** connects, or from a battery **84** housed internally in the adapter **80**. Use of the battery **84** can overcome the need for a user to first connect the adapter **80** to the power supply before the electromagnet in the plug **510** is operated and can magnetically connect to the receptacle **550**. The drawn power energizes the electromagnet of core **530** and coil **532** to produce a magnetic attraction to the ferromagnetic material **570** that can hold the plug **510** to the receptacle **550**.

[0060] Referring to FIG. **14**, an embodiment of a magnetic connector **600** according to certain teachings of the present disclosure is illustrated. The connector **600** has a plug **602** having contacts **604** and an electromagnet **606**. The connector **600** also has a receptacle **620** positioned on a portable computer or electronic device **630**. The receptacle **620** has an attraction plate or magnet **622** and contacts **624**. The contacts **624** act as paths for electrical communication so that they are electrically coupled to internal electronics **632** of electronic device **630**. In addition, the attraction plate or magnet **622** acts as a path of electrical communication so that it is also electrically coupled to the internal electronics

632. In the schematic view of FIG. 14, various components, such as leads, contacts, and coils, are not shown for simplicity.

[0061] In the present embodiment, the electromagnet 606 is in the plug 602; however, it can be positioned in the receptacle 620. The electromagnet 606 derives its power from circuitry 612 of the power adapter 608 so the electromagnet 606 does not drain a battery (not shown) of the electronic device 630. In the present embodiment, the plug 602 includes a switch element 610 interrupting the electrical connection between the electromagnet 606 and the circuitry 612 of the adapter 608.

[0062] In one embodiment, the switch element 610 includes a mechanical switch that a user presses to turn the electromagnet 602 on and off. Any mechanical switch, such as a conventional micro-switch, for controlling the power load of the electromagnet 602 is suitable for the connector 600. In general, the switch element 610 allows the electromagnet 606 to run directly from power of the adapter 608.

[0063] In another embodiment, the switch element 610 includes a touch sensor that energizes (e.g., turns on) the electromagnet 606 when a user touches the sensor 610 by picking up the plug 602. Touch sensors are known in the art. For example, the touch sensor 610 can include logic circuitry and contacts (not shown) and can use principals of capacitance of the human body for operation. Once activated by the touch sensor 610, the electromagnet 606 can remain energized for a time interval to allow the user to couple the plug 602 to the receptacle 620 and to turn on the electronic device 630. Once the energized electromagnet 606 is magnetically coupled to the attraction plate 622 of the receptacle 650, the contacts 604 and 624 that form a signal path between the adapter 608 and the device 630, and a signal along the signal path can be used to keep the touch sensor 610 activated and the electromagnet 606 energized.

[0064] While the plug 602 is connected and the electromagnet 606 energized, the touch sensor 610 can turn off the electromagnet 606 when touched to allow the user to disconnect the plug 602. Alternatively, the touch sensor 610 can reduce the energization of the electromagnet 606 to enable easy removal by the user but to keep a small remaining attraction. In addition, when the device 630 is turned off, the device 630 may no longer send a signal along the signal path of the contacts 604 and 624 or may send a quit signal to the touch sensor 610 to stop energization of the electromagnet 606. Then, the de-energized electromagnet 606 can allow the plug 602 to be released from the electronic device 630.

[0065] In yet another embodiment, the switch element 610 includes a motion sensor, which detects when the plug 602 is moved. The motion sensor 610 can maintain the electromagnet 606 energized for a time interval to allow the user to couple the plug 602 with the receptacle 620 and to turn on the electronic device 630. Once coupled, the signal path formed by contacts 604 and 624 can allow a signal to control the circuitry of the motions sensor 610 to maintain it activated while coupled to the device 630. The motion sensor 610 can automatically shut off the electromagnet 606 so as to release the plug 602 from the device 630 if a sudden movement occurs (e.g., the device 630 is dropped or pulled away with the plug 602 connected).

[0066] Referring to FIG. 15, an embodiment of a magnetic connector 600 according to certain teachings of the present disclosure is illustrated having an electromagnet 606 and a proximity sensor 640. Reference numerals in FIG. 15 that are the same as those in other Figures represent like components between embodiments. The proximity sensor 640 is positioned in the plug 602 and is coupled to a switch element 642. The electromagnet 606 is also coupled to the switch element 642, which in turn is coupled to circuitry 644 for providing power located in the adapter 608. The proximity sensor 640 and switch element 642 turn on the electromagnet 606 when the sensor 640 is positioned near plate 622 of the receptacle 620.

[0067] In one embodiment, the proximity sensor 640 includes a Hall Effect sensor, which detects magnetic field levels. In use, the electromagnet 606 is initially energized before being coupled to the receptacle 620. The initial energization can be achieved, for example, when the adapter 608 is coupled to a power source (not shown) or when a touch sensor (not shown) or the like is activated by the user. The initial energization can be less than that necessary to magnetically couple the electromagnet 606 to the plate 622. Once the plug 602 is moved in proximity to the receptacle 622, the magnetic field associated with the initial energization of the electromagnet 606 is changed, which is subsequently detected by the Hall Effect sensor 640. The sensor 640, in turn, causes the energization of the electromagnet 606 to be increased to allow it to magnetically couple to the attraction plate 622.

[0068] Referring to FIG. 16, an embodiment of a magnetic connector 600 according to certain teachings of the present disclosure is illustrated having an electromagnet 606 and fault detection circuitry 650. Reference numerals in FIG. 16 that are the same as those in other Figures represent like components between embodiments. As before, the electromagnet 606 is energized to magnetically couple with the attraction plate 626 of receptacle 620, which can be ferromagnetic material or a permanent magnet. The fault detection circuitry 650 detects a fault event caused, for example, by a surge or spike in the power supply.

[0069] The fault detection circuitry 650 can be similar to that commonly used in the art for power adapters. In one embodiment, for example, the fault detection circuitry 650 can include circuitry for detecting an over-current. In another embodiment, for example, the fault detection circuitry 650 can include circuitry for detecting an over-temperature.

[0070] When the fault detection circuitry 650 detects a fault event, the circuitry 650 can stop energizing the electromagnet 606 and allow the plug 602 to be released from the embodiment of the receptacle 620 having a ferromagnetic attraction plate 626. Alternatively, the circuitry 650 can reverse the direction of current supplied through the electromagnet 606 so the electromagnet 606 is repelled by the polarity of the embodiment of the receptacle 620 having a permanent magnet on the attraction plate 626. It will be appreciated that the electromagnet 606 and fault circuitry 650 can be positioned on the device 630 while the attraction plate can be positioned on the plug 602 of the connector 600 to achieve the same protection.

[0071] Referring to FIG. 17, an embodiment of a magnetic connector 600 according to certain teachings of the present disclosure is illustrated having two electromagnets 606 and 660. The plug 602 has the first electromagnet 606, which is

energized by the power adapter **608**. The receptacle **620** positioned in the device **630** has the second electromagnet **660**, which is power by an internal power supply **662**, such as a battery. The two electromagnets **606** and **660** have opposite polarities allowing them to be magnetically coupled.

[**0072**] In one embodiment, the adapter **608** includes fault detection circuitry **650**. When a fault is detected by fault detection circuitry **662**, the polarity of the first electromagnet **606** can be reversed by the circuitry **650** so that the first and second electromagnets **606** and **660** repel one another and actively prevent connection.

[**0073**] In another embodiment, the adapter **608** includes circuitry **650** for identifying the adapter **608**. For example, the identification circuitry **650** can identify a type of electronic device to which it is intended to be connected or can even identify a specific device to which is can only be used. When a user intends to connect the plug **602** to the receptacle **620**, the first electromagnet **606** can be energized according to the techniques disclosed herein. However, the second electromagnet **660** can remain de-energized. When the user positions the plug **602** against the receptacle **620**, the signal path formed by contacts **604** and **624** allow the identification circuitry **650** to send a signal to the internal electronics **632** of the device, which can identify the adapter **608** being connected to the device **630**.

[**0074**] If the adapter **608** is intended for the device **630**, then the second electromagnet **660** can be energized with opposite polarity to couple with the first electromagnet **606**, or the second electromagnet **660** can remain de-energized while the first electromagnet **606** is simply allowed to magnetically couple with the ferromagnetic components of the de-energized electromagnet **660**. If, on the other hand, the adapter **608** is not intended for the device **630**, then the second electromagnet **660** can be energized with the same polarity to repel the first electromagnet **606** and actively prevent connection.

[**0075**] Referring to FIG. **18**, an embodiment of a magnetic connector **600** according to certain teachings of the present disclosure is illustrated having an electromagnet **606** and control circuitry **670**. In one embodiment, the control circuitry **670** includes a switch element, which receives a control signal from the internal electronics **632** of the device **630**. When the battery of the electronic device **630** is fully charged, the internal electronics **632** sends a control signal to the control circuitry **670** via the signal path formed by contacts **604** and **624**. Moreover, when the internal electronics **632** detects a fault, it can send a control signal to the control circuitry **670**.

[**0076**] As described above, one of the contacts **604** on the plug **602** and one of the contracts **624** on the receptacle **620** (preferably, the centrally located contacts **604** and **624**) can form a signal path between the device **630** and the adapter **608**. It is along such a signal path that the control signal indicating the fully charged battery is sent. When the signal for "full charge" is received, the control circuitry **670** causes its internal switch element to stop energization of the electromagnet **606**, and the plug **602** becomes decoupled from the receptacle **626**. If it is desirable to keep the plug **602** magnetically coupled, albeit slightly, to the receptacle **620** even after full charging of the battery, the plate **627** on the receptacle **620** can include a magnet (not shown) for maintaining at least some magnetic coupling with ferromagnetic material of the electromagnet **606**.

[**0077**] In another embodiment, the control circuitry **670** receives a control signal, which governs whether the adapter **608** associated with the control circuitry **670** can operate with the electronic device **630**. In this embodiment, the internal electronics **632** on the device **630** produces a control signal that identifies the device **630**, such as by its make or model. The control signal can be a digital signal, for example, identifying the device **630**. The control circuitry **670** in the adapter **608** is pre-configured to energize the electromagnet **606** only when the identifying control signal is received. To respond to the control signal, the control circuitry includes a switch element for controlling the electrical connection of the electromagnet **606** with its energizing source, and the circuitry includes a logic element for interpreting the control signal and activating the switch element.

[**0078**] Thus, when a user positions the plug **602** against the receptacle **620** to connect them, the signal contacts **604** and **624** on the plug and receptacle **602** and **620** will make contact, allowing the internal electronics **632** of the device **630** to communicate its identifying control signal to the control circuitry **670** of the adapter **608**. If the circuitry **670** receives the correct signal, an internal switch within the circuitry causes the electromagnet **606** to be energized for coupling with the receptacle. Otherwise, the electromagnet will not be energized, and the plug **602** will not stay coupled to the receptacle **620**.

[**0079**] Accordingly, the electromagnet **606** on the adapter **608** will only be energized for a particular model or type of device, which may prevent the possibility of a user inadvertently coupling an adapter with a specific power rating to a device requiring a different power rating. For example, harm to a computer can be prevented because the computer will not allowing itself to be connected to the wrong type of power adapter (e.g., one that supplies a higher voltage than the computer's specification). Furthermore, the control circuitry **670** and identification of the device **630** can be configured so that the device **630** will only draw power only from a particular power adapter or a group of power adapters. Such a configuration can be useful in various settings, such as a school or other public organization, to discourage theft.

[**0080**] In yet another embodiment, the control circuitry **670** includes a security system, which requires the user to enter a particular code or other identification. Without the entered code, the control circuitry **670** will not energize the electromagnet, and the plug **602** will not engage with the receptacle **620**.

[**0081**] In the present disclosure, embodiments of magnetic connectors have been disclosed in the context of providing power from a transformer to a laptop computer. However, it will be appreciated with the benefit of the present disclosure that the subject matter of the present disclosure is applicable to various types of connectors, which provide electrical connection in the form of power and/or signals between an electronic device and any of a number of electronic devices or electrical relations. For example, other applicable electronic devices or electrical relations include portable DVD players, CD players, radios, printers, portable memory devices, portable disk drives, input/output devices, power

sources, batteries, etc. Other applicable types of electrical connections that can be provided by the connectors of the present disclosure include Universal Serial Bus, D-subminiature, FireWire, network connectors, docking connectors, etc.

[0082] In the present disclosure, a number of embodiments of magnetically coupleable connectors are disclosed. With the benefit of the present disclosure, it will be appreciated that aspects or features of one embodiment disclosed herein can be used in or combined with aspects and features of other embodiments disclosed herein to produce additional embodiments consistent with the teachings of the present disclosure.

[0083] The foregoing description of preferred and other embodiments is not intended to limit or restrict the scope or applicability of the inventive concepts conceived of by the Applicants. In exchange for disclosing the inventive concepts contained herein, the Applicants desire all patent rights afforded by the appended claims. Therefore, it is intended that the appended claims include all modifications and alterations to the full extent that they come within the scope of the following claims or the equivalents thereof.

1. An apparatus for electrically connecting an electronic device to an electrical relation, comprising:

a first connector having at least one first contact electrically connected to the electronic device; and

a second connector positionable adjacent the first connector and having at least one second contact electrically connected to the electrical relation,

wherein one of the connectors comprises a magnetic element positioned on the connector,

wherein the other connector comprises an electromagnet positioned on the connector, and

wherein the electromagnet is energizable to produce magnetic attraction with the magnetic element and substantially maintain the first and second contacts of the connectors in an electrically conductive relationship.

2. The apparatus of claim 1, wherein the first and second connectors each comprise a corresponding element to align the first and second connectors in one orientation.

3. The apparatus of claim 1, wherein the magnetic element comprises a permanent magnet, ferromagnetic material, or another electromagnet.

4. The apparatus of claim 1, further comprising a switch element coupled to the electromagnet to control energization of the electromagnet.

5. The apparatus of claim 4, wherein the switch element comprises a mechanical switch actuatable by a user of the apparatus.

6. The apparatus of claim 4, wherein the switch element comprises a touch switch actuatable by a user of the apparatus.

7. The apparatus of claim 1, further comprising a motion sensor coupled to the electromagnet to control energization of the electromagnet.

8. The apparatus of claim 1, further comprising a proximity sensor coupled to the electromagnet and controlling energization of the electromagnet.

9. The apparatus of claim 1, further comprising a detector coupled to the electromagnet, the detector detecting a condition and controlling energization of the electromagnet in response to the detected condition.

10. The apparatus of claim 9, wherein in response to the detected condition, the detector causes the electromagnet to be de-energized.

11. The apparatus of claim 9, wherein in response to the detected condition, the detector causes the electromagnet to be energized with a reverse polarity.

12. The apparatus of claim 9, wherein the condition includes a fault between the electronic device and the electrical connection, and wherein the detector includes a fault detector.

13. The apparatus of claim 1, further comprising control circuitry coupled to the electromagnet, the control circuitry detecting a control signal and controlling energization of the electromagnet based on the signal.

14. The apparatus of claim 13, wherein the control signal indicates a charged condition of a battery associated with the electronic device, and wherein the control circuitry causes the electromagnet to be de-energized in response to receiving the control signal.

15. The apparatus of claim 13, wherein the control signal provides an identification of the electronic device, and wherein the control circuitry causes the electromagnet to be energized in response to receiving the control signal.

16. An electronic device connectable to an electrical relation, comprising:

a housing for internal electronics;

a first connector connected to the relation, the first connector having at least one first contact electrically connected to the electrical relation; and

a second connector connected to the device, the second connector having at least one second contact electrically connected to the internal electronics,

wherein one of the connectors comprises a magnetic element positioned on the connector,

wherein the other connector comprises an electromagnet positioned on the connector, and

wherein the electromagnet is energiziable to produce magnetic attraction with the magnetic element and substantially maintain the first and second contacts of the connectors in an electrically conductive relationship.

17. The electronic device of claim 16, further comprising a transformer connectable to the first connector and connectable to the relation.

18. The electronic device of claim 17, wherein the first connector comprises a plug attached to the transformer by a cable.

19. The electronic device of claim 18, wherein the second connector comprises a receptacle attached to the housing of the electronic device.

20. The electronic device of claim 16, wherein the magnetic element comprises a permanent magnet, ferromagnetic material, or another electromagnet.

21. The electronic device of claim 16, wherein the electromagnet comprises a ferromagnetic core wrapped with a coil, the coil connectable to a power supply.

22. The electronic device of claim 21, wherein the power supply is selected from the group consisting of: a battery of

the electronic device, a transformer, the electronic relation, and a battery independent of the electronic device.

23. The electronic device of claim 16, further comprising a switch element coupled to the electromagnet to control energization of the electromagnet.

24. The electronic device of claim 23, wherein the switch element comprises a mechanical switch actuatable by a user of the apparatus.

25. The electronic device of claim 23, wherein the switch element comprises a touch switch actuatable by a user of the apparatus.

26. The electronic device of claim 16, further comprising a motion sensor coupled to the electromagnet to control energization of the electromagnet.

27. The electronic device of claim 16, further comprising a proximity sensor coupled to the electromagnet to control energization of the electromagnet.

28. The electronic device of claim 16, further comprising a detector coupled to the electromagnet, the detector detecting a condition and controlling energization of the electromagnet in response to the detected condition.

29. The electronic device of claim 28, wherein in response to the detected condition, the detector causes the electromagnet to be de-energized.

30. The electronic device of claim 28, wherein in response to the detected condition, the detector causes the electromagnet to be energized with a reverse polarity.

31. The electronic device of claim 28, wherein the condition includes a fault between the electronic device and the electrical connection, and wherein the detector includes a fault detector.

32. The electronic device of claim 16, further comprising control circuitry coupled to the electromagnet, the control circuitry detecting a control signal and controlling energization of the electromagnet based on the signal.

33. The electronic device of claim 32, wherein the control signal indicates a charged condition of a battery associated with the electronic device, and wherein the control circuitry causes the electromagnet to be de-energized in response to receiving the control signal.

34. The electronic device of claim 32, wherein the control signal provides an identification of the electronic device, and wherein the control circuitry causes the electromagnet to be energized in response to receiving the control signal.

35. A power adapter for connecting internal electronics of a device to a power supply, comprising:

a transformer connectable to the power supply;

a first connector connected to the internal electronics;

a second connector positionable adjacent the first connector and connected to the transformer;

means for energizing magnetic attraction between the connectors; and

means for maintaining the internal electronics in an electrically conductive relationship with the transformer.

36. The power adapter of claim 35, further comprising means for selecting energization of the magnetic attraction.

37. The power adapter of claim 35, further comprising means for controlling energization of the magnetic attraction.

38. The power adapter of claim 35, further comprising means for detecting a condition to control energization of the magnetic attraction.

39. The power adapter of claim 38, wherein the condition is selected from the group consisting of a fault, a received control signal, a received identification, and an entered security code.

* * * * *