PIANO

Objective :

To make a piano using arduino uno R3 and piezo buzzer.

Materials Used:

Name	Quantity	Component
U1	1	Arduino Uno R3
PIEZO1	1	Piezo
R1	1	100 Ω Resistor
S1 S2 S3 S4 S5 S6	6	Pushbutton
R2 R3 R4 R5 R6 R7	6	1 kΩ Resistor

Wiring :

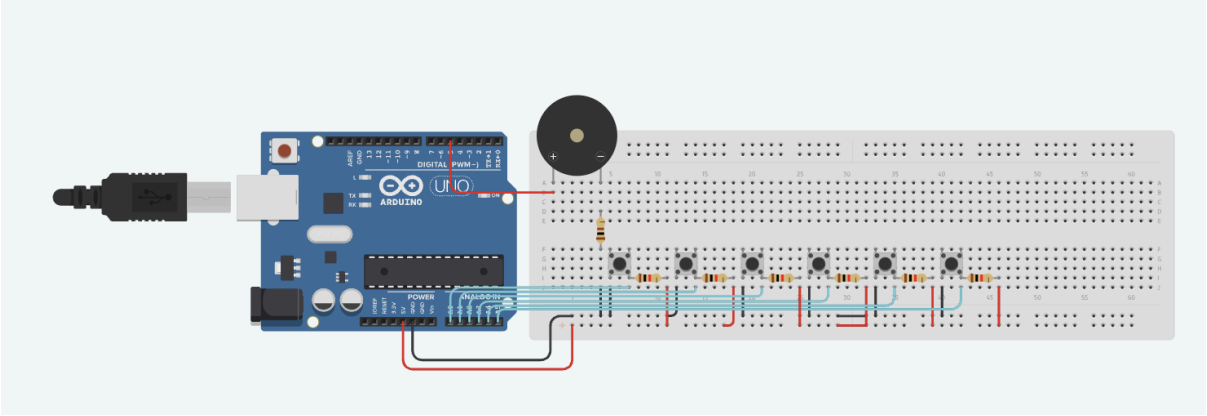

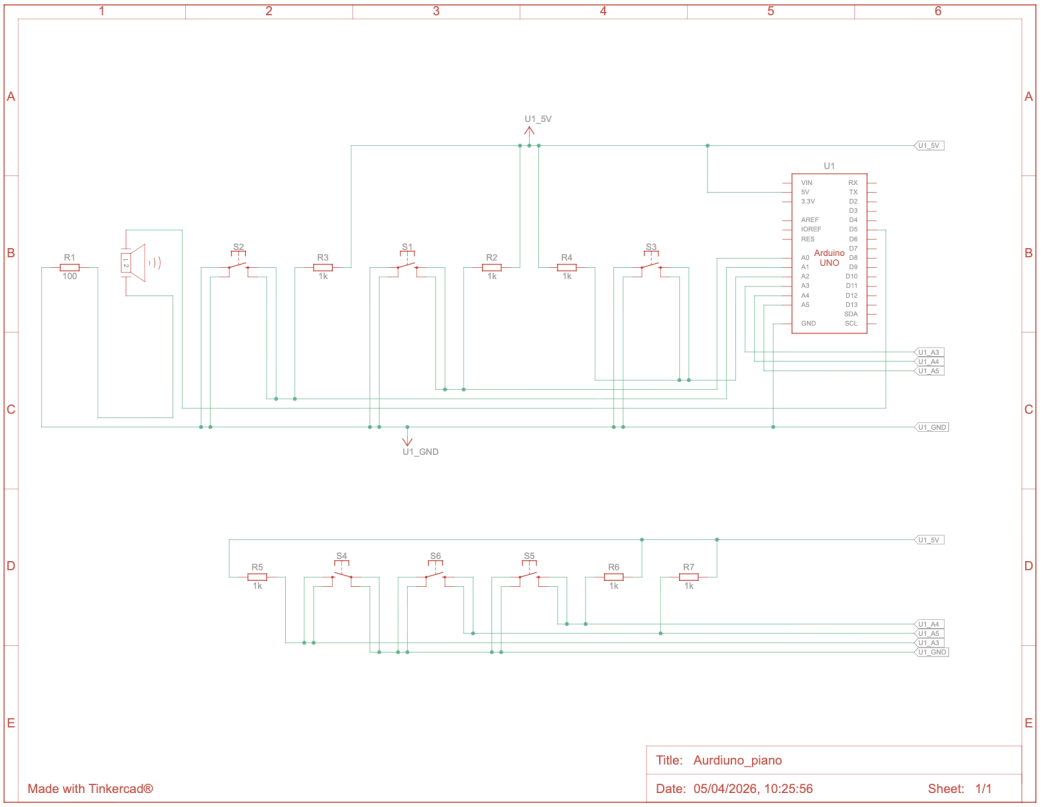

Idea 1:

My 1st idea is to use 6 push buttons (pull up resistors) and 6 piano keys. As there are only 6 read pins in the arduino uno board. Moreover all the connections and code are going to be the same independent of the number of keys so even if I use 100 keys or 6 keys in both cases my learning will be the same.

All 6 keys are pull up resistors; they read 1 if not pressed and read 0 if pressed. So I used a “for loop” to iterate between 6 keys as this for loop runs continuously. There won't be any issue if I press key 5 after pressing key 6. Inside the for loop I used an if statement to check if that particular key is pressed. If the key is pressed I use a while loop to play the sound till I release that key.

Code for idea 1 :

```
// C++ code
int buzzpin=5;
//all the readpins are in a list.
int rp[]={A0,A1,A2,A3,A4,A5};
// all the frequencies are in a list.
int note[]={262,294,330,349,392,440};

void setup()
{
  pinMode(buzzpin,OUTPUT);
  for(int i=0;i<6;i++){
    pinMode(rp[i],INPUT);
  }
  //Serial.begin(9600);
}

void loop()
{
  for (int i=0;i<6;i++){
    //Serial.println(digitalRead(rp[i]));
    if(digitalRead(rp[i])==0){
      while(digitalRead(rp[i])==0){
        tone(buzzpin,note[i]);
      }
      noTone(buzzpin);
    }
  }
}
```

Link for idea 1: https://www.tinkercad.com/things/i2ynlvAqu46-aurdiunopiano

Problem :

This works fine but the issue is in real pianos we can press any number of keys at the same time but here as we are using a while loop even if i try to press 2 keys the first pressed key will only result in giving the tone.

Idea 2 :

I was unable to clearly understand what pressing 2 keys at the same time does. So I thought to use something like PWM but in terms of frequency to kinda mix both the tunes. For example if I press say 300Hz button and 200Hz button at the same time it will play 300Hz for say 20ms and 200Hz for 20ms and keeps switching till the pressed button changes.

Code for Idea 2 :

```
// C++ code
int buzzpin=5;
//all the readpins are in a list.
int rp[]={A0,A1,A2,A3,A4,A5};
// all the frequencies are in a list.
int note[]={262,294,330,349,392,440};
//the notes of keys that are pressed
int activetone[6];
void setup()
{
  pinMode(buzzpin,OUTPUT);
  for(int i=0;i<6;i++){
    pinMode(rp[i],INPUT);
  }
}

void loop()
{
  int activecount=0;//number of keys pressed;
  for (int i=0;i<6;i++){
    if(digitalRead(rp[i])==0){
      //the key rp[i] is pressed;
      //we append the note of the key to activetone
      activetone[activecount]=note[i];
      activecount++;
     }
   }
  // case 1 no keys are pressed;
  if (activecount==0){
    noTone(buzzpin);
  }
  // case 2 if only 1 key is pressed
  else if (activecount==1){
    tone(buzzpin,activetone[0]);
  }
  //case 3 multiple keys are pressed
  else {
    for(int i=0;i<activecount;i++){
      tone(buzzpin,activetone[i]);
      //delay(200);
    }
  }

}
```

Link for idea 2: https://www.tinkercad.com/things/2tvr0y1pUCY-aurdiunopiano2

Note:

This works fine for 1 key at a time. but I am unable to test for multiple buttons.