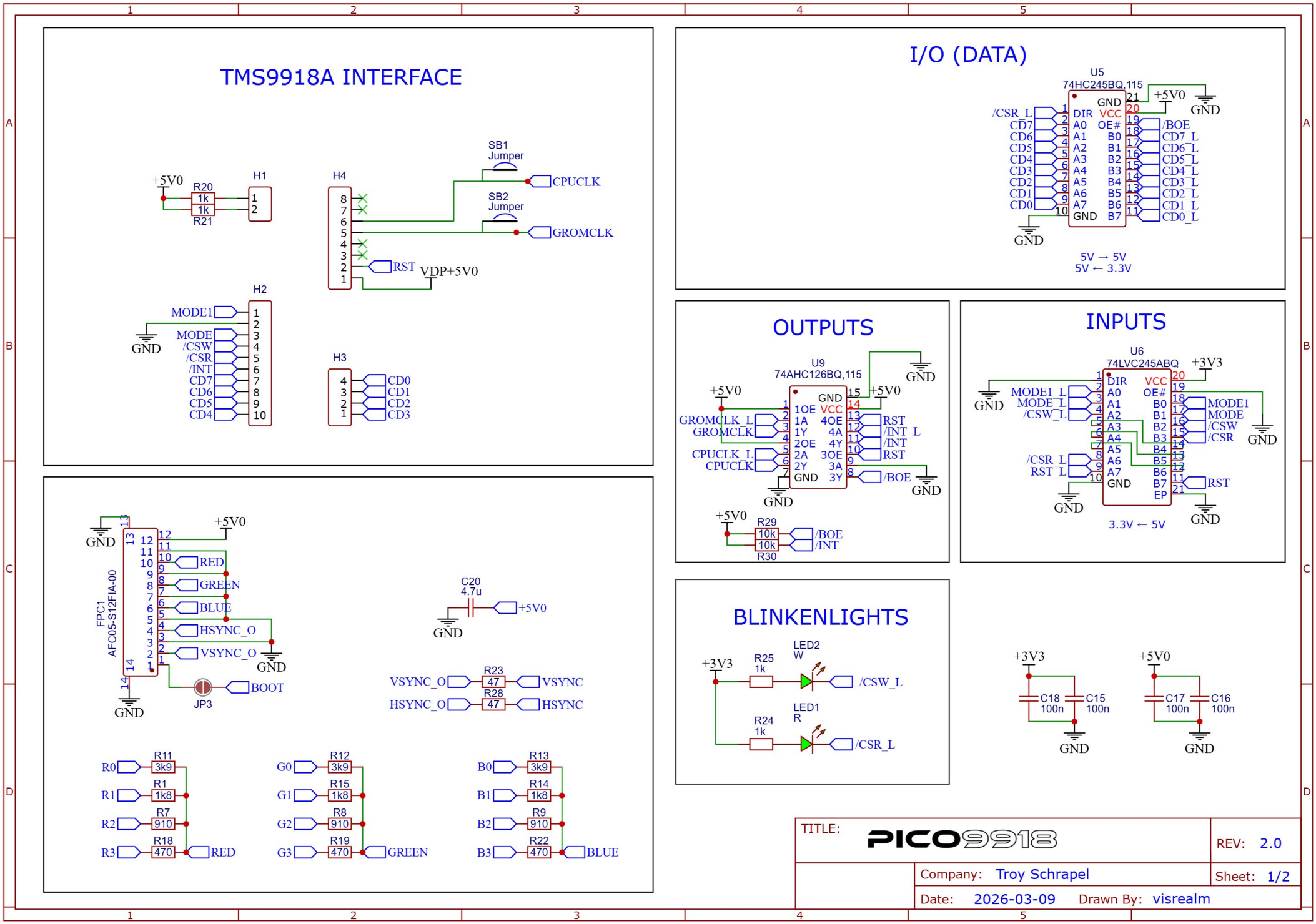
TMS9918A INTERFACE
+5V0
R20
1k
1k
R21
H1
H4
SB1
Jumper
SB2
Jumper
CPUCLK
GROMCLK
RST
VDP+5V0
H2
MODE1
GND
MODE
/CSW
/CSR
/INT
CD7
CD6
CD5
CD4
H3
CD0
CD1
CD2
CD3
I/O (DATA)
U5
74HC245BQ,115
GND
DIR
A0
A1
A2
A3
A4
A5
A6
A7
GND
VCC
OE#
B0
B1
B2
B3
B4
B5
B6
B7
/CSR_L
CD7
CD6
CD5
CD4
CD3
CD2
CD1
CD0
/BOE
CD7_L
CD6_L
CD5_L
CD4_L
CD3_L
CD2_L
CD1_L
CD0_L
5V → 5V
5V ← 3.3V
OUTPUTS
U9
74AHC126BQ,115
1OE
1A
1Y
2OE
2A
2Y
GND
VCC
4OE
4A
4Y
3OE
3A
3Y
GROMCLK_L
GROMCLK
CPUCLK_L
CPUCLK
RST
/INT_L
/INT
/BOE
R29
10k
10k
R30
INPUTS
U6
74LVC245ABQ
+3V3
MODE1_L
MODE_L
/CSW_L
/CSR_L
RST_L
MODE1
MODE
/CSW
/CSR
EP
3.3V ← 5V
BLINKENLIGHTS
R25
1k
LED2
W
/CSW_L
R24
1k
LED1
R
/CSR_L
C18
100n
C15
100n
C17
100n
C16
100n
FPC1
AFC05-S12FIA-00
RED
GREEN
BLUE
HSYNC_O
VSYNC_O
BOOT
JP3
C20
4.7u
VSYNC_O
HSYNC_O
R23
47
R28
47
VSYNC
HSYNC
R0
R1
R2
R3
R11
3k9
R1
1k8
R7
910
R18
470
G0
G1
G2
G3
R12
3k9
R15
1k8
R8
910
R19
470
B0
B1
B2
B3
R13
3k9
R14
1k8
R9
910
R22
470
TITLE:
PICO9918
REV: 2.0
Company: Troy Schrapel
Sheet: 1/2
Date: 2026-03-09
Drawn By: visrealm

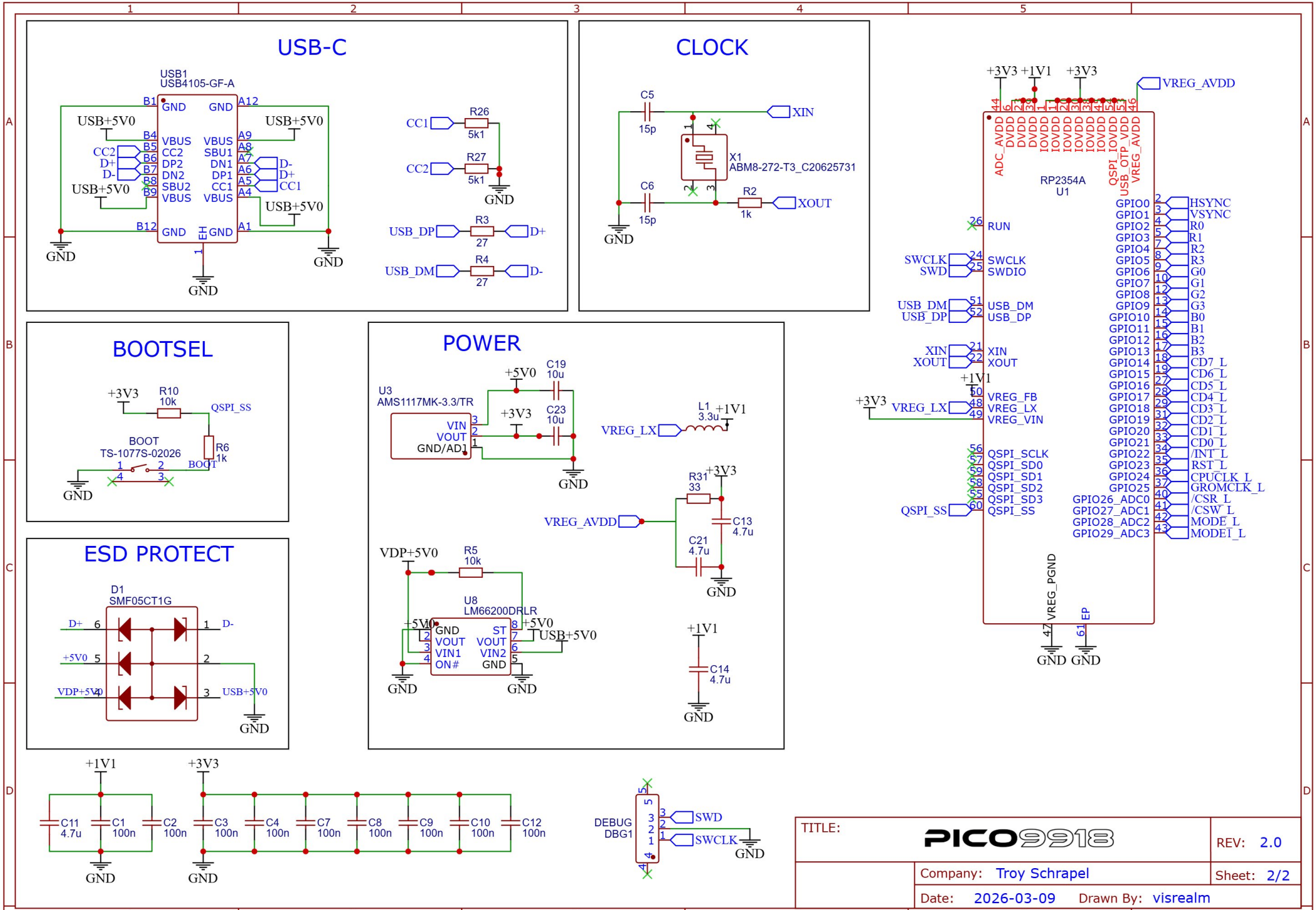
USB-C
USB1
USB4105-GF-A
USB+5V0
CC2
D+
D-
CC1
GND
R26
5k1
R27
5k1
R3
27
R4
27
USB_DP
USB_DM
CLOCK
C5
15p
C6
15p
X1
ABM8-272-T3_C20625731
R2
1k
XIN
XOUT
RP2354A
U1
+3V3
+1V1
VREG_AVDD
RUN
SWCLK
SWDIO
USB_DM
USB_DP
XIN
XOUT
VREG_FB
VREG_LX
VREG_VIN
QSPI_SCLK
QSPI_SD0
QSPI_SD1
QSPI_SD2
QSPI_SD3
QSPI_SS
VREG_PGND
EP
HSYNC
VSYNC
R0
R1
R2
R3
G0
G1
G2
G3
B0
B1
B2
B3
CD7_L
CD6_L
CD5_L
CD4_L
CD3_L
CD2_L
CD1_L
CD0_L
/INT_L
RST_L
CPUCLK_L
GROMCLK_L
/CSR_L
/CSW_L
MODE_L
MODEI_L
BOOTSEL
R10
10k
QSPI_SS
BOOT
TS-1077S-02026
R6
1k
POWER
U3
AMS1117MK-3.3/TR
VIN
VOUT
GND/ADJ
C19
10u
C23
10u
L1
3.3u
R31
33
C13
4.7u
C21
4.7u
VDP+5V0
R5
10k
U8
LM66200DRLR
ST
VIN1
VIN2
ON#
C14
4.7u
ESD PROTECT
D1
SMF05CT1G
+5V0
VDP+5V0
USB+5V0
C11
4.7u
C1
100n
C2
100n
C3
100n
C4
100n
C7
100n
C8
100n
C9
100n
C10
100n
C12
100n
DEBUG
DBG1
SWD
SWCLK
TITLE:
PICO9918
REV: 2.0
Company: Troy Schrapel
Sheet: 2/2
Date: 2026-03-09
Drawn By: visrealm