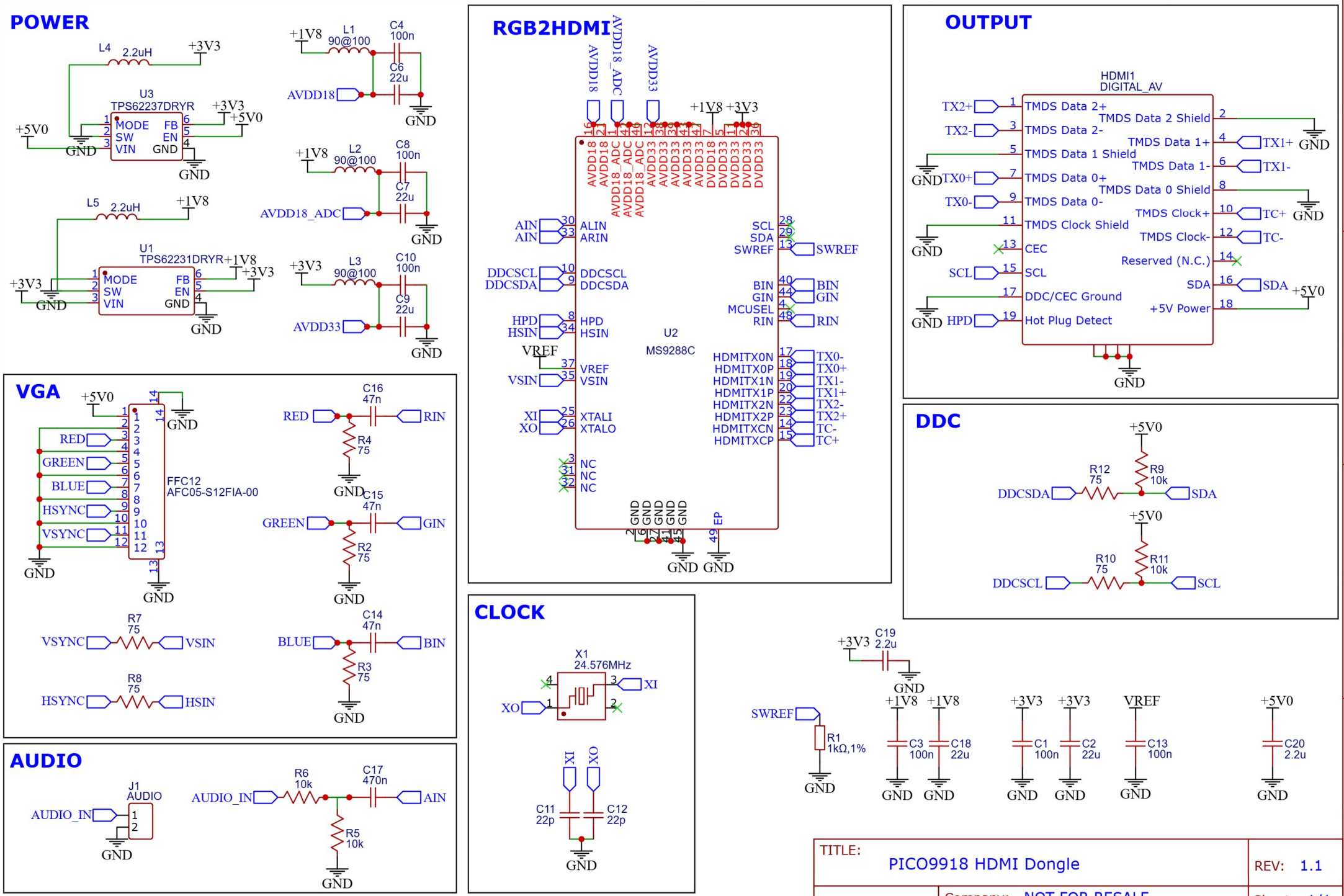

TITLE: PICO9918 HDMI Dongle	REV: 1.1
EasyEDA Company: NOT FOR RESALE	Sheet: 1/1
Date: 2026-01-10 Drawn By: visrealm	

THIS DESIGN IS NOT FOR RESALE. IT IS AN OPEN SOURCE HOBBYIST PROJECT FOR PERSONAL USE ONLY.