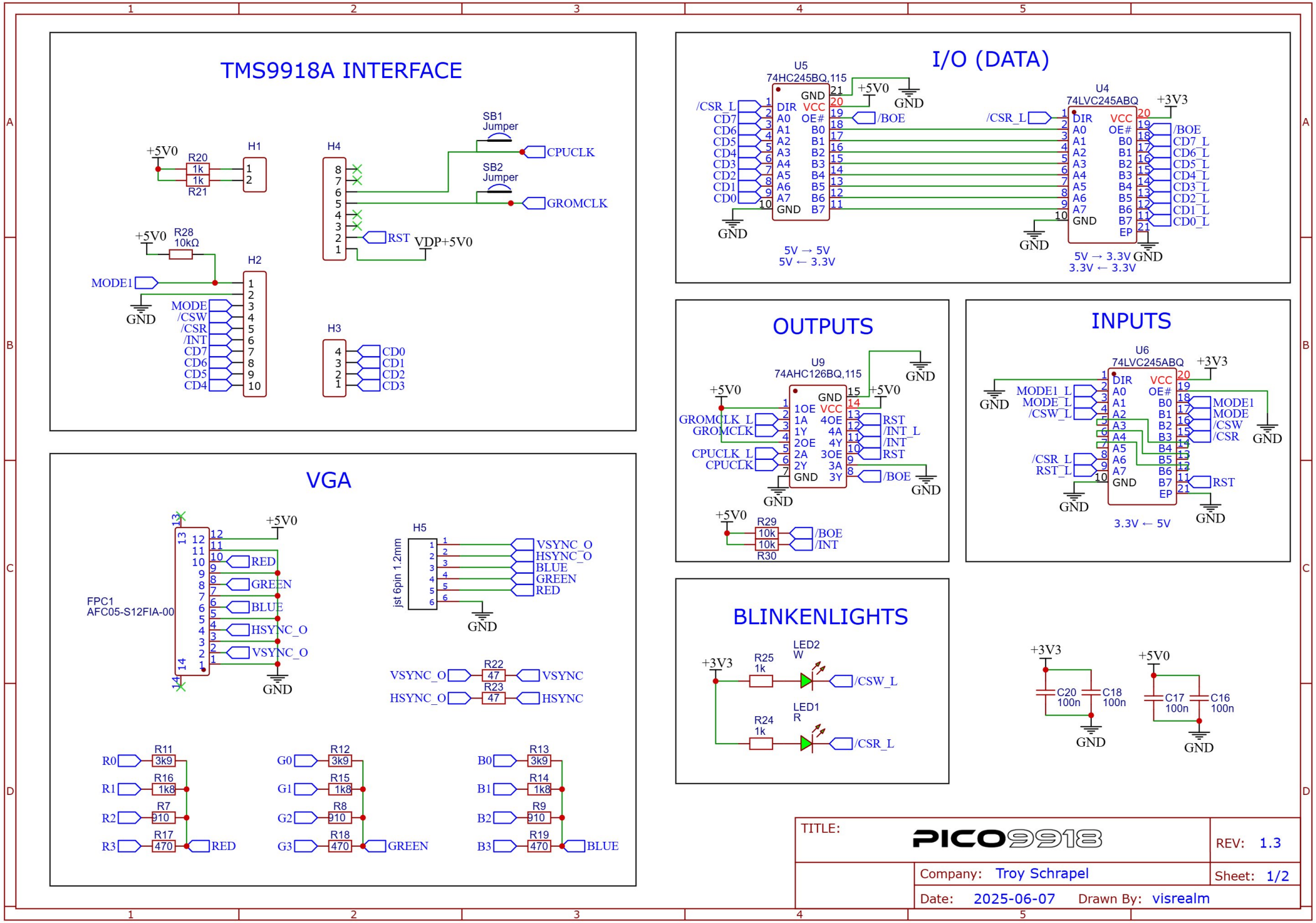
TMS9918A INTERFACE
+5V0
R20
1k
1k
R21
H1
H4
SB1
Jumper
CPUCLK
SB2
Jumper
GROMCLK
RST
VDP+5V0
+5V0
R28
10kΩ
H2
MODE1
GND
MODE
/CSW
/CSR
/INT
CD7
CD6
CD5
CD4
H3
CD0
CD1
CD2
CD3
I/O (DATA)
U5
74HC245BQ,115
/CSR_L
CD7
CD6
CD5
CD4
CD3
CD2
CD1
CD0
DIR
A0
A1
A2
A3
A4
A5
A6
A7
GND
VCC
OE#
B0
B1
B2
B3
B4
B5
B6
B7
/BOE
5V → 5V
5V ← 3.3V
U4
74LVC245ABQ
+3V3
EP
/CSR_L
/BOE
CD7_L
CD6_L
CD5_L
CD4_L
CD3_L
CD2_L
CD1_L
CD0_L
5V → 3.3V
3.3V ← 3.3V
OUTPUTS
U9
74AHC126BQ,115
GROMCLK_L
GROMCLK
CPUCLK_L
CPUCLK
1OE
1A
1Y
2OE
2A
2Y
1OE
4OE
4A
4Y
3OE
3A
3Y
RST
/INT_L
/INT
/BOE
R29
10k
10k
R30
INPUTS
U6
74LVC245ABQ
MODE1_L
MODE_L
/CSW_L
/CSR_L
RST_L
MODE1
MODE
/CSW
/CSR
RST
3.3V ← 5V
VGA
FPC1
AFC05-S12FIA-00
RED
GREEN
BLUE
HSYNC_O
VSYNC_O
H5
jst 6pin 1.2mm
VSYNC_O
HSYNC_O
BLUE
GREEN
RED
R22
47
R23
47
VSYNC
HSYNC
R0
R1
R2
R3
R11
3k9
R16
1k8
R7
910
R17
470
RED
G0
G1
G2
G3
R12
3k9
R15
1k8
R8
910
R18
470
GREEN
B0
B1
B2
B3
R13
3k9
R14
1k8
R9
910
R19
470
BLUE
BLINKENLIGHTS
+3V3
R25
1k
LED2
W
/CSW_L
R24
1k
LED1
R
/CSR_L
+3V3
C20
100n
C18
100n
+5V0
C17
100n
C16
100n
TITLE:
PICO9918
REV: 1.3
Company: Troy Schrapel
Sheet: 1/2
Date: 2025-06-07
Drawn By: visrealm

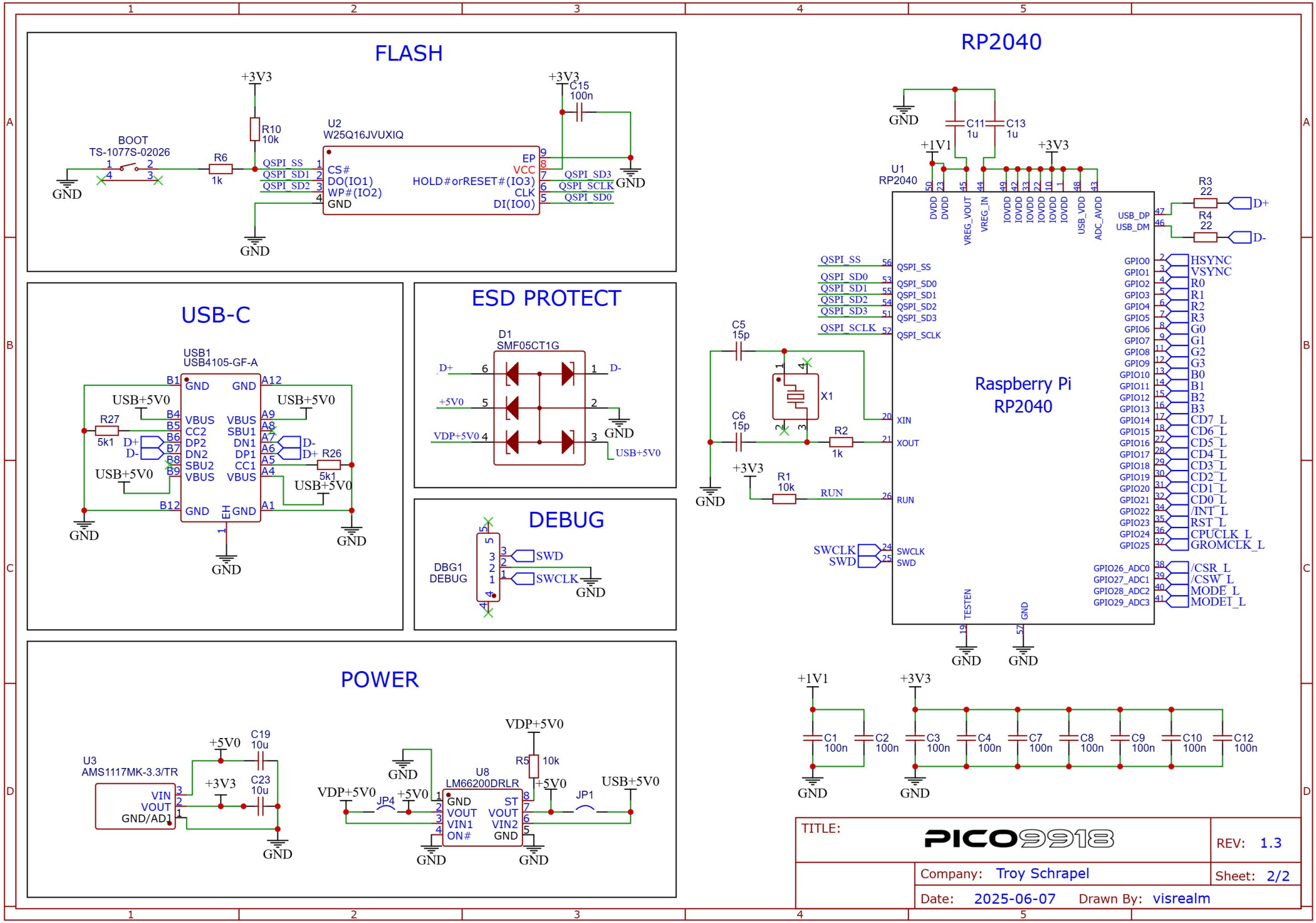
FLASH
+3V3
R10
10k
BOOT
TS-1077S-02026
R6
1k
GND
U2
W25Q16JVUXIQ
QSPI_SS
QSPI_SD1
QSPI_SD2
CS#
DO(IO1)
WP#(IO2)
GND
EP
VCC
HOLD#orRESET#(IO3)
CLK
DI(IO0)
QSPI_SD3
QSPI_SCLK
QSPI_SD0
C15
100n
USB-C
USB1
USB4105-GF-A
USB+5V0
R27
5k1
D+
D-
VBUS
CC2
DP2
DN2
SBU2
DN1
DP1
CC1
R26
ESD PROTECT
D1
SMF05CT1G
+5V0
VDP+5V0
DEBUG
DBG1
DEBUG
SWD
SWCLK
POWER
U3
AMS1117MK-3.3/TR
VIN
VOUT
GND/ADJ
+5V0
C19
10u
C23
10u
U8
LM66200DRLR
VDP+5V0
R5
10k
JP4
JP1
USB+5V0
RP2040
U1
RP2040
+1V1
C11
1u
C13
1u
DVDD
VREG_VOUT
VREG_IN
IOVDD
USB_VDD
ADC_AVDD
USB_DP
USB_DM
R3
22
R4
22
D+
D-
QSPI_SS
QSPI_SD0
QSPI_SD1
QSPI_SD2
QSPI_SD3
QSPI_SCLK
C5
15p
C6
15p
X1
XIN
XOUT
R2
1k
R1
10k
RUN
SWCLK
SWD
Raspberry Pi
RP2040
GPIO0
GPIO1
GPIO2
GPIO3
GPIO4
GPIO5
GPIO6
GPIO7
GPIO8
GPIO9
GPIO10
GPIO11
GPIO12
GPIO13
GPIO14
GPIO15
GPIO16
GPIO17
GPIO18
GPIO19
GPIO20
GPIO21
GPIO22
GPIO23
GPIO24
GPIO25
HSYNC
VSYNC
R0
R1
R2
R3
G0
G1
G2
G3
B0
B1
B2
B3
CD7_L
CD6_L
CD5_L
CD4_L
CD3_L
CD2_L
CD1_L
CD0_L
/INT_L
RST_L
CPUCLK_L
GROMCLK_L
GPIO26_ADC0
GPIO27_ADC1
GPIO28_ADC2
GPIO29_ADC3
/CSR_L
/CSW_L
MODE_L
MODEI_L
TESTEN
C1
100n
C2
100n
C3
100n
C4
100n
C7
100n
C8
100n
C9
100n
C10
100n
C12
100n
TITLE:
PICO9918
REV: 1.3
Company: Troy Schrapel
Sheet: 2/2
Date: 2025-06-07
Drawn By: visrealm