A Source is a device which converts mechanical, chemical, thermal or some other form of energy into electrical energy. In other words, the source is an active network element meant for generating electrical energy.

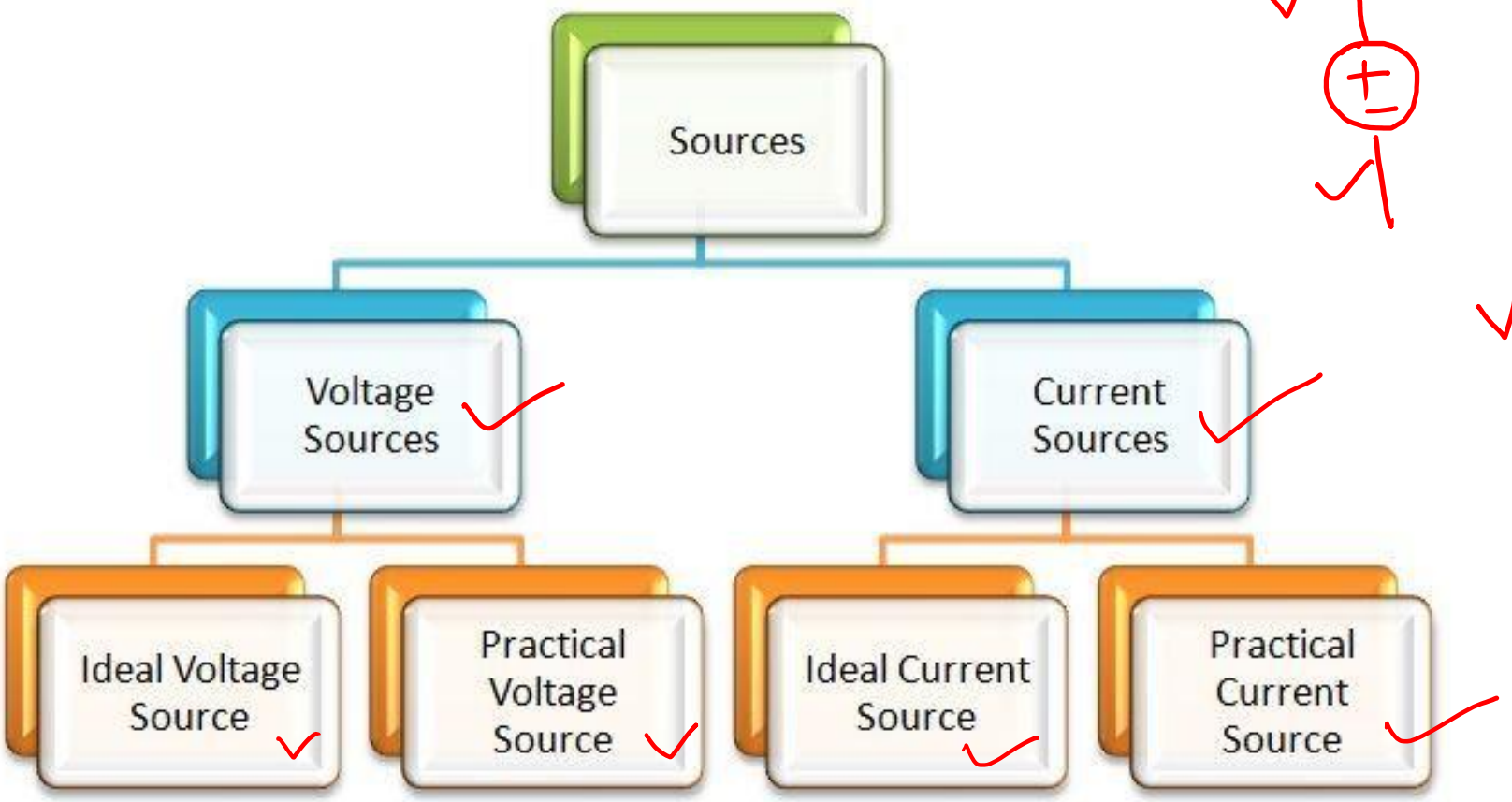

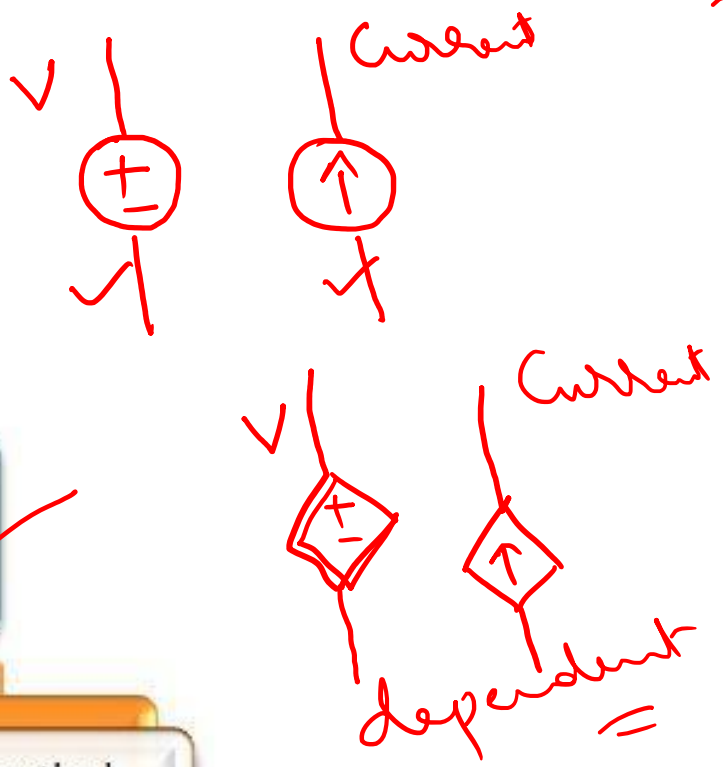

- A voltage source is a two-terminal device whose voltage at any instant of time is constant and is independent of the current drawn from it. Such a voltage source is called an Ideal Voltage Source and have zero internal resistance.

- Practically an ideal voltage source cannot be obtained

- Sources having some amount of internal resistances are known as Practical Voltage Source. Due to this internal resistance; voltage drop takes place, and it causes the terminal voltage to reduce. The smaller is the internal resistance (r) of a voltage source, the more closer it is to an Ideal Source.

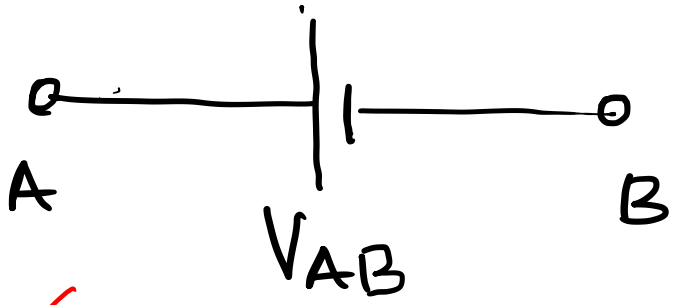

IDEAL VOLTAGE SOURCE

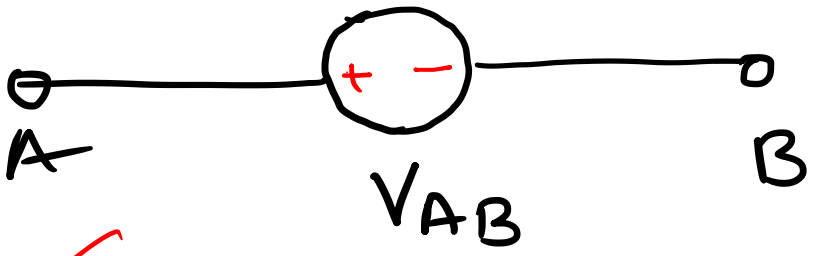

PRACTICAL VOLTAGE SOURCE

Ideal Voltage Source

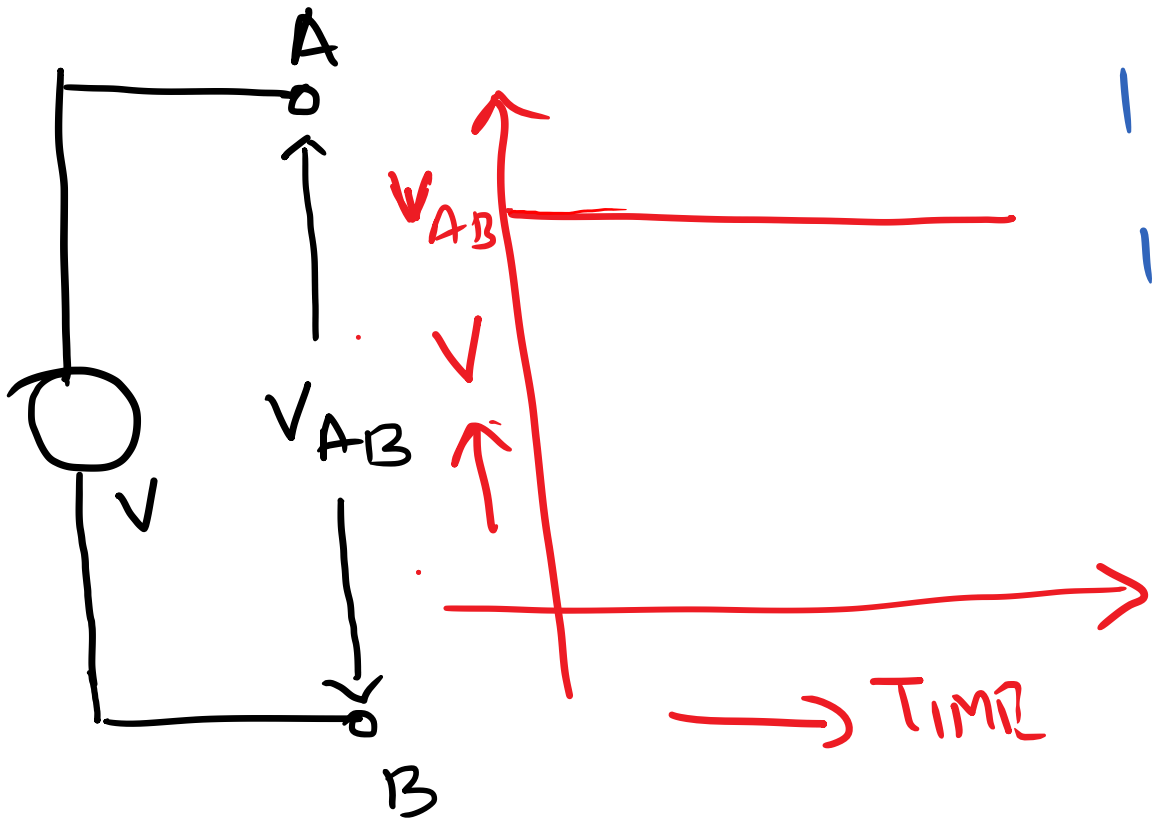

Practical Voltage Source.

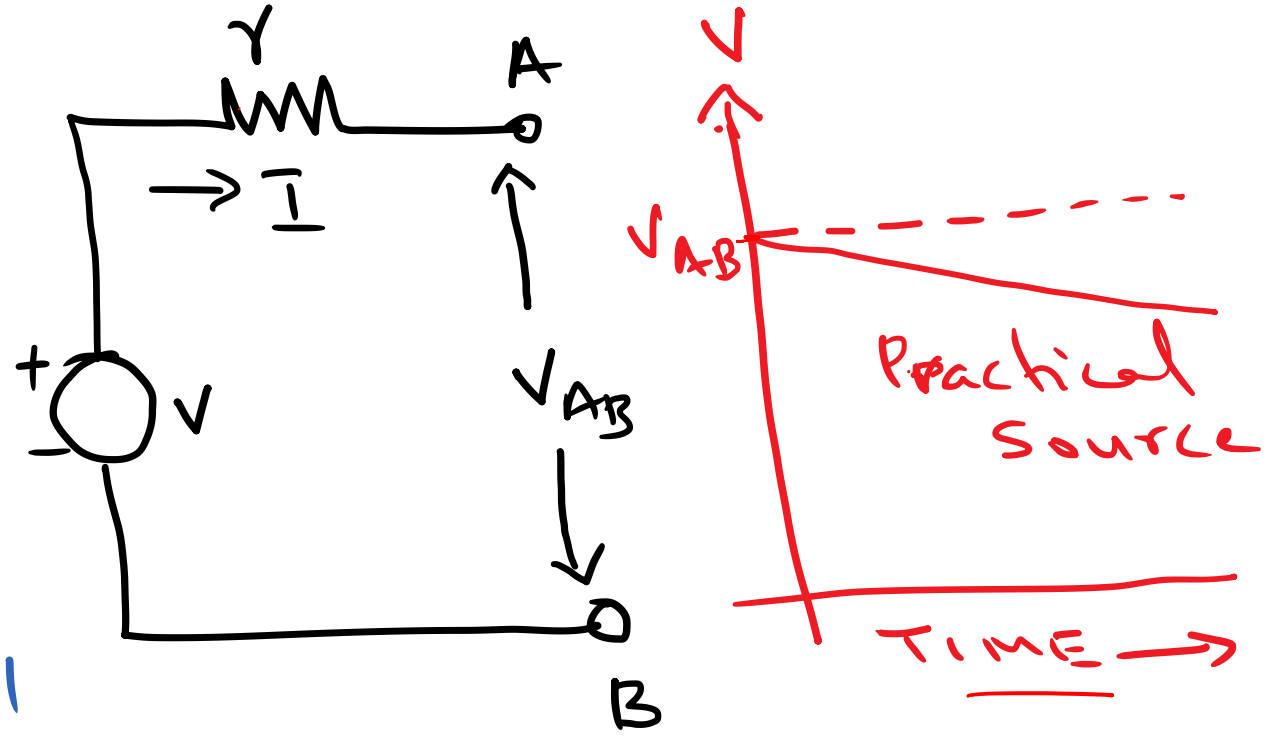

- An ideal current source is a two-terminal circuit element which supplies the same current to any load resistance connected across its terminals. It is important to keep in mind that the current supplied by the current source is independent of the voltage of source terminals. It has infinite resistance.

- A practical current source is represented as an ideal current source connected with the resistance in parallel.

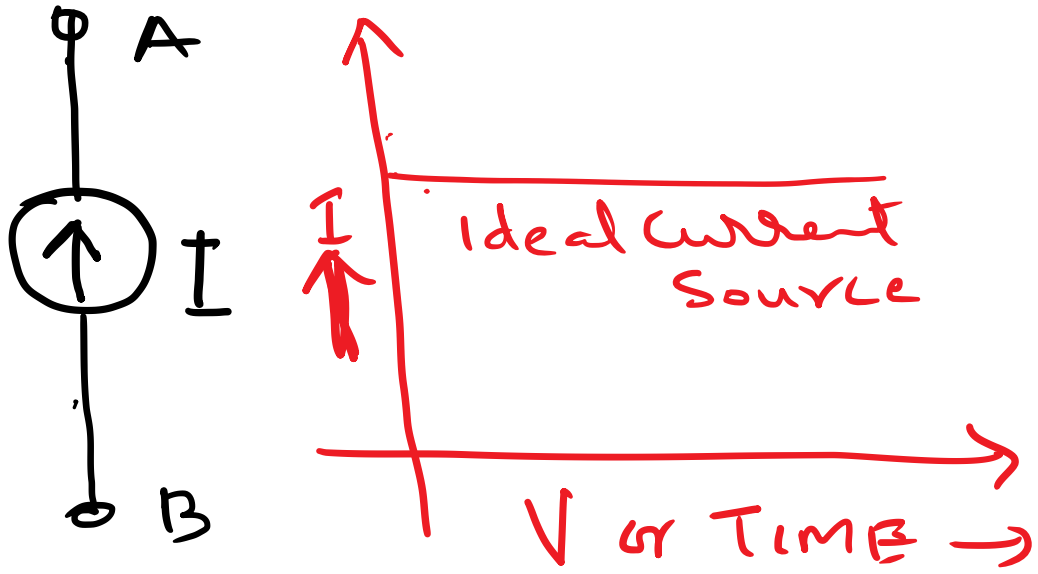

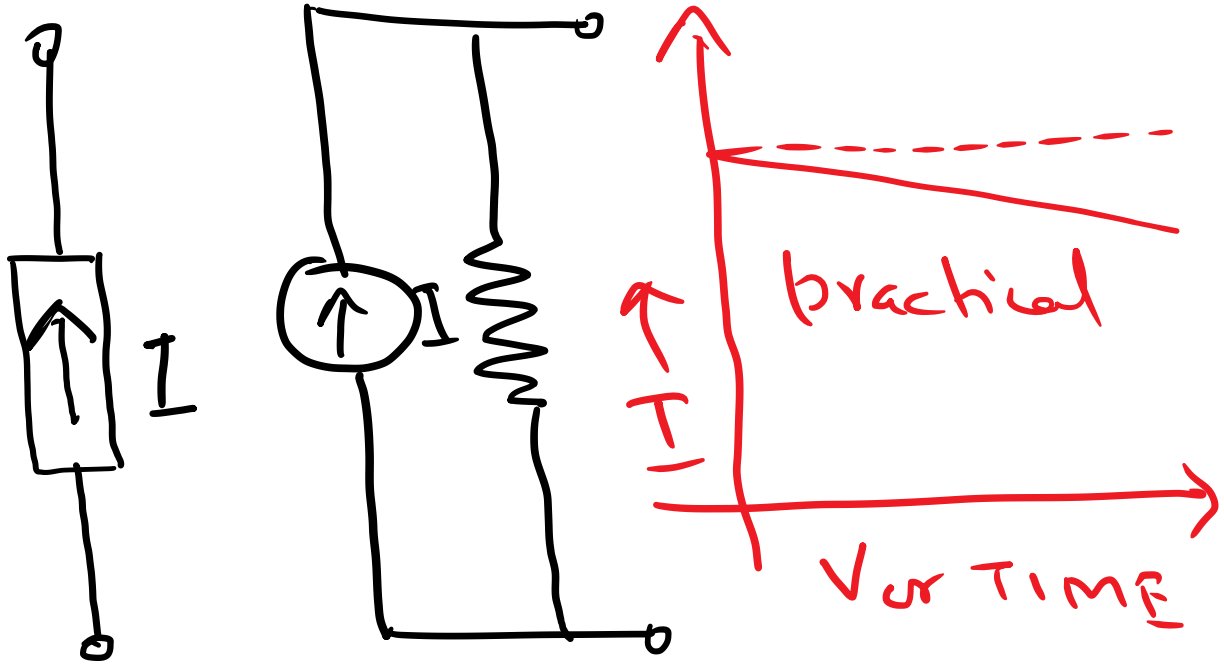

Independent Sources

The element for which both voltage and current don't depend on the voltage or current elsewhere in the circuit

Dependent Sources

The element for which either the voltage or current depends on the voltage or current elsewhere in the circuit

$S_1 \rightarrow$ Voltage Source $\rightarrow$ Independent Voltage Source.

$S_2 \rightarrow$ Current Source $\rightarrow$ Independent

$S_3 \rightarrow$ Voltage Source $\rightarrow$ dependent Voltage

$S_4 \rightarrow$ Current So $\rightarrow$ $S_4 \rightarrow$ depend current Sou

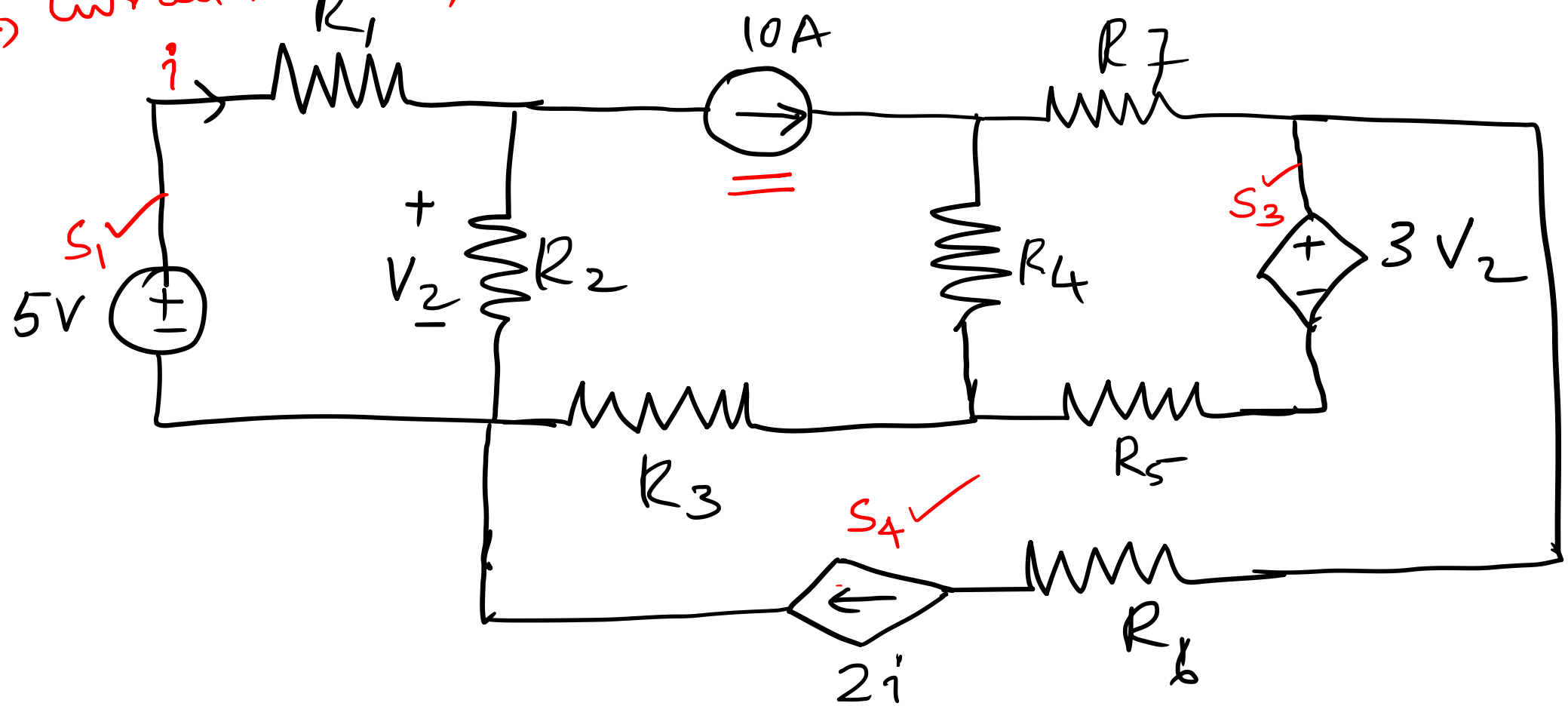

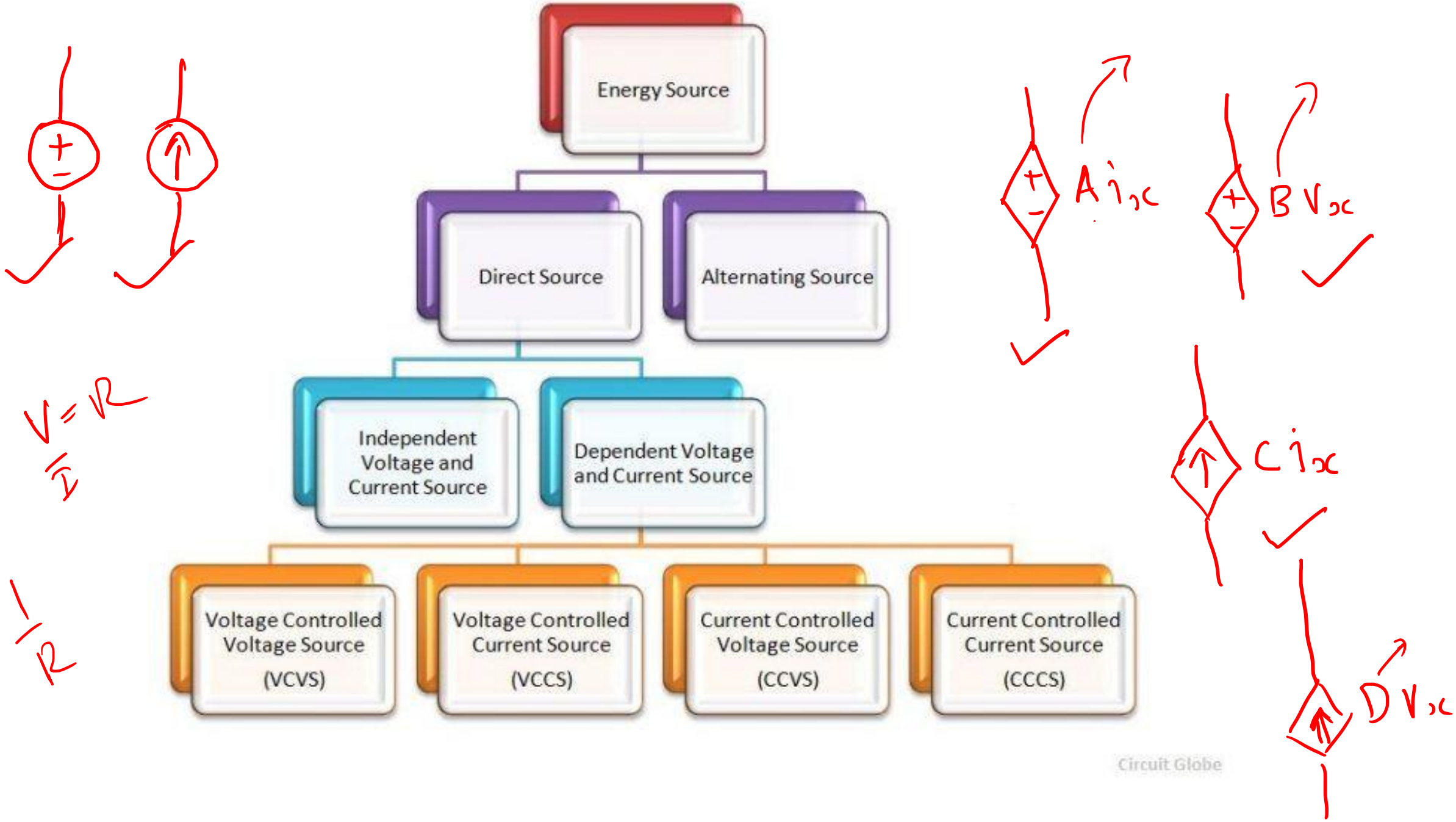
Energy Source
Direct Source
Alternating Source
Independent Voltage and Current Source
Dependent Voltage and Current Source
Voltage Controlled Voltage Source (VCVS)
Voltage Controlled Current Source (VCCS)
Current Controlled Voltage Source (CCVS)
Current Controlled Current Source (CCCS)
Circuit Globe
$A i_x$
$B V_x$
$C i_x$
$D V_x$
$V = R$
I
$\frac{1}{R}$

Nodes, Branches, and Loops

- A network as an interconnection of elements or devices
- A circuit is a network providing one or more closed path
- A branch represents a single element such as voltage source or a resistor
- A node is the point of connection between two or more branches
- A node is usually indicated by a dot in the circuit

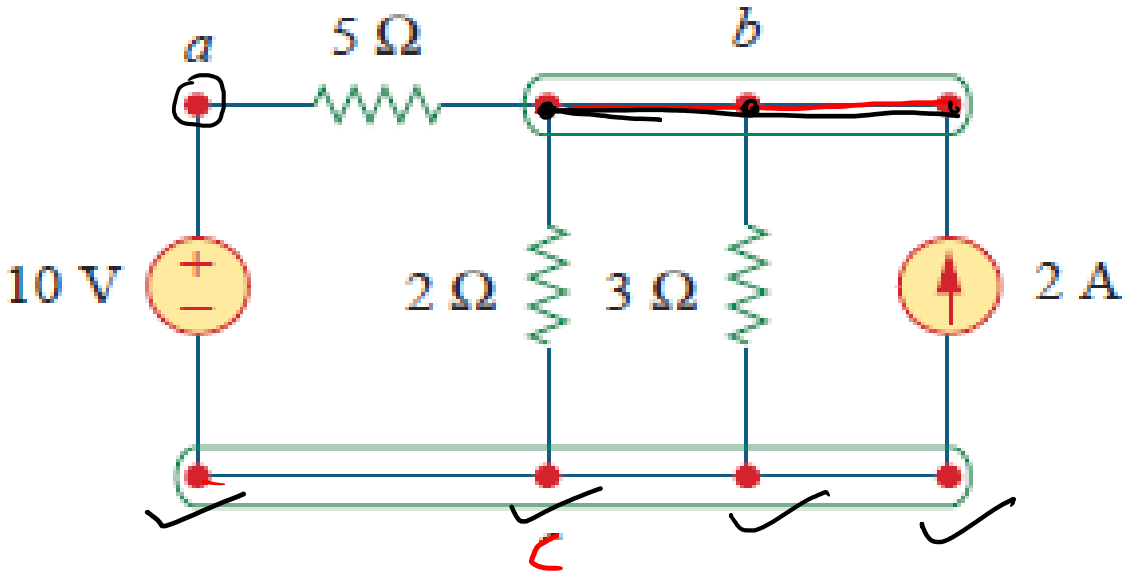
a
5 Ω
b
10 V
2 Ω
3 Ω
2 A
c

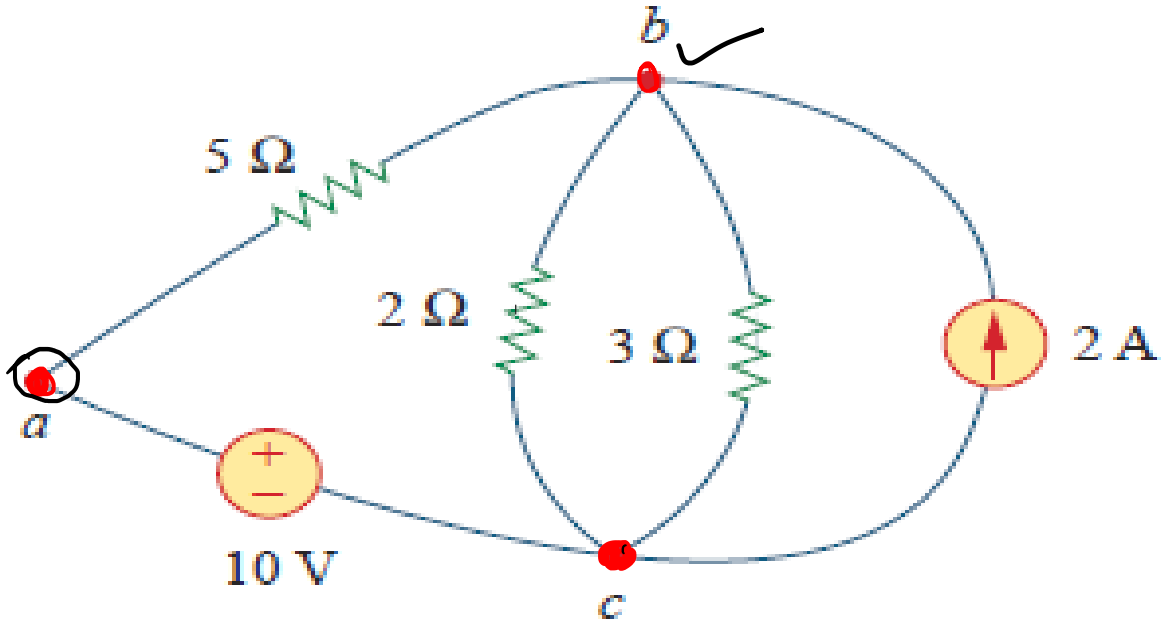
b
5 Ω
2 Ω
3 Ω
2 A
a
10 V
c

Kirchhoff's Laws

Kirchhoff's first law is based on the law of conservation of charge, which requires that the algebraic sum of charges within a system cannot change.

Kirchhoff's current law (KCL) states that the algebraic sum of currents entering a node (or a closed boundary) is zero.

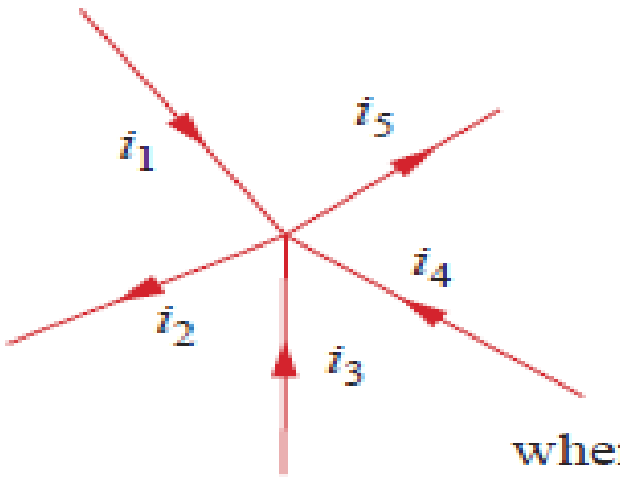

Mathematically, KCL implies that

$$i_1 + (-i_2) + i_3 + i_4 + (-i_5) = 0$$

$$i_1 + i_3 + i_4 = i_2 + i_5$$

$$\boxed{\sum_{n=1}^{N} i_n = 0}$$

where N is the number of branches connected to the node and i_n is the nth current entering (or leaving) the node.

The sum of the currents entering a node is equal to the sum of the currents leaving the node.

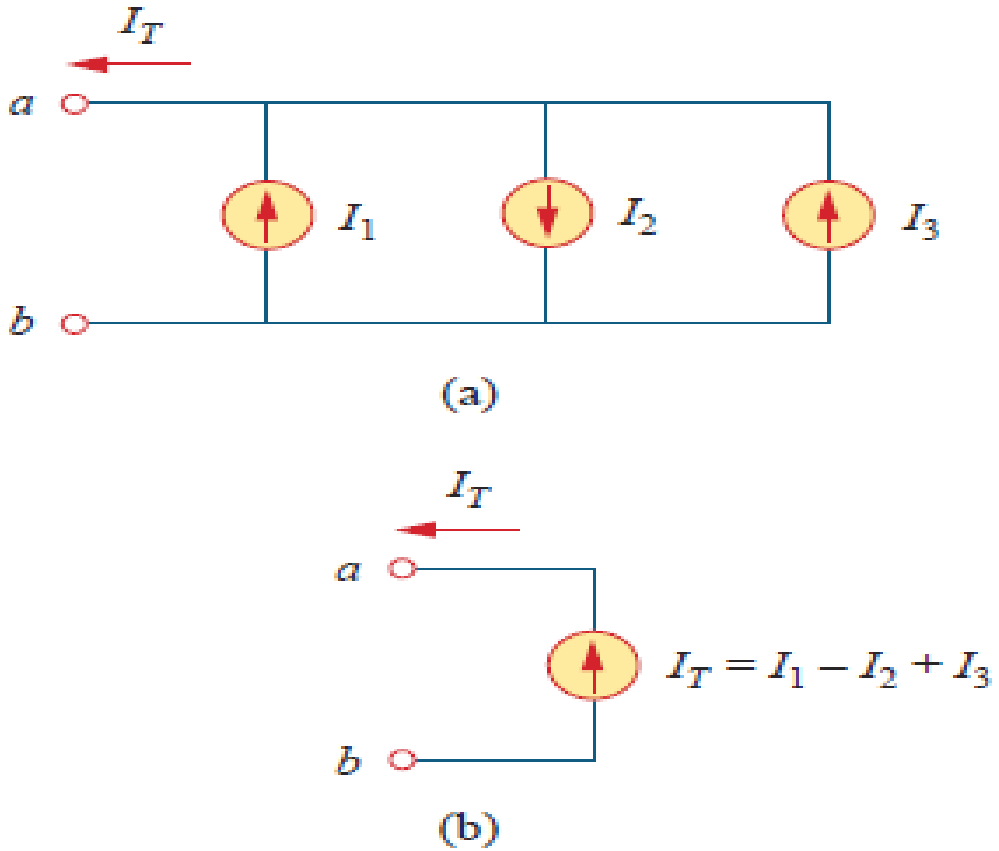

Current sources in parallel: (a) original circuit, (b) equivalent circuit.

$$I_T + I_2 = I_1 + I_3$$

$$I_T = I_1 - I_2 + I_3$$

A circuit cannot contain two different currents, I_1 and I_2, in series, unless $I_1 = I_2$; otherwise KCL will be violated.

Find the magnitude and direction the current. Given $i_1 = 10\ A$
$i_2 = 6A$; $i_5 = 4A$

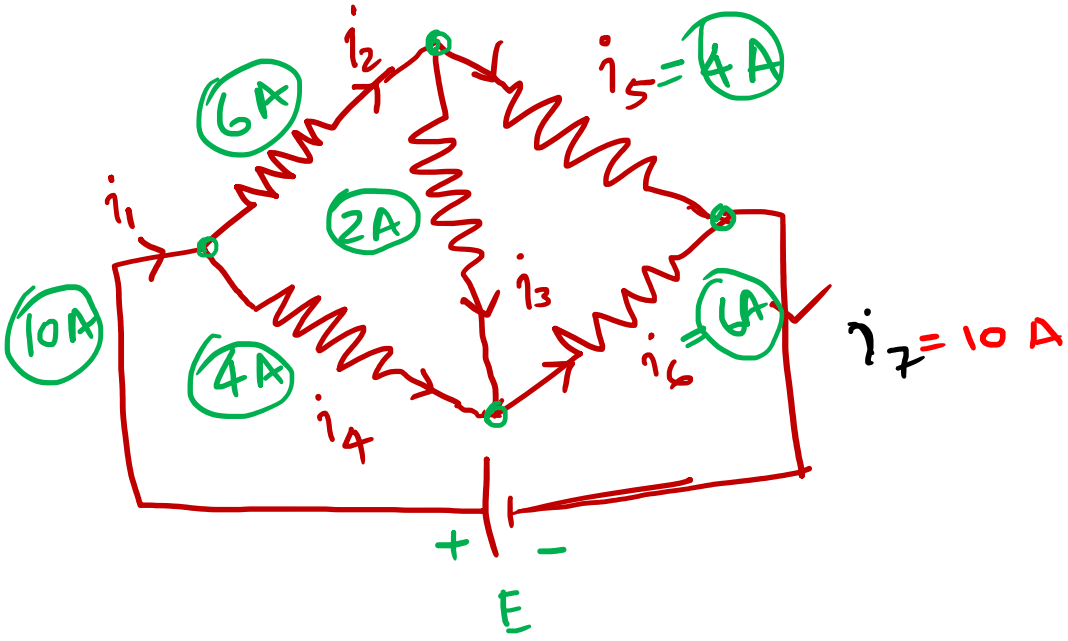

Find the magnitude and direction of the current. Given $i_1 = 10\ A$
$i_2 = 6A$; $i_5 = 4A$

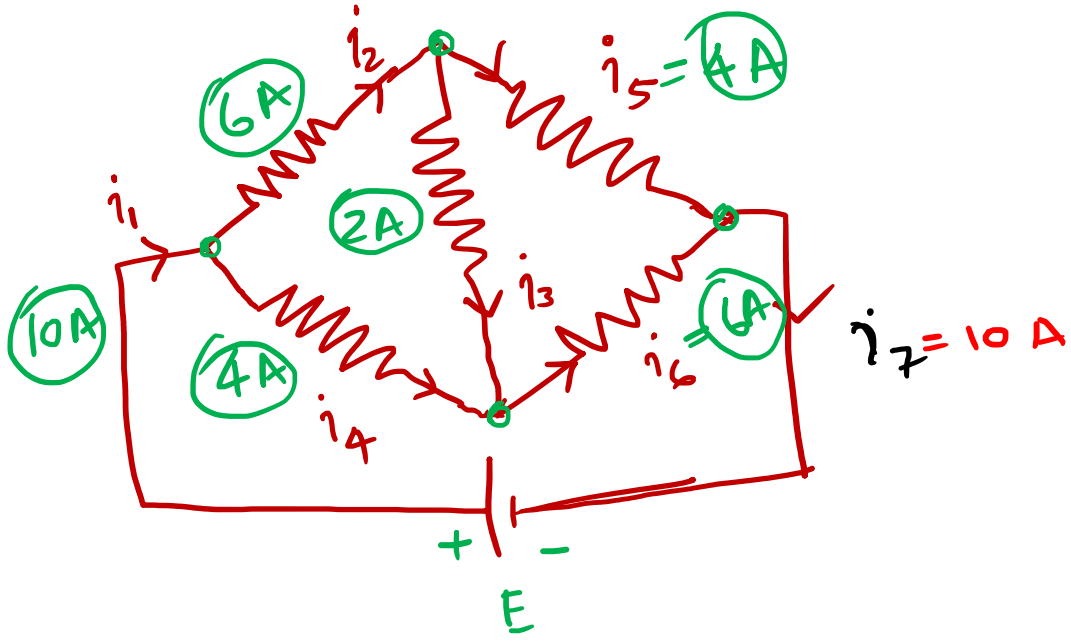

$$\boxed{i_1 = i_7}$$

$i_1 = i_2 + i_4$

$10 = 6 + i_4$

$i_4 = 4\ A$

$i_2 = i_3 + i_5$

$6 = i_3 + 4$

$i_3 = 2A$

$i_5 + i_6 = i_7$

$4 + i_6 = 10$

$i_6 = 6\ A$

$i_1 = i_7 = 10A$

$i_2 = 6A$

$i_3 = 2A$

$i_4 = 4\ A$

$i_5 = 4A$

$i_6 = 6A$

Find the magnitude and direction of the current. Given $i_1 = 10\ A$
$i_2 = 6A$; $i_5 = 4A$

$$\boxed{i = i_7}$$

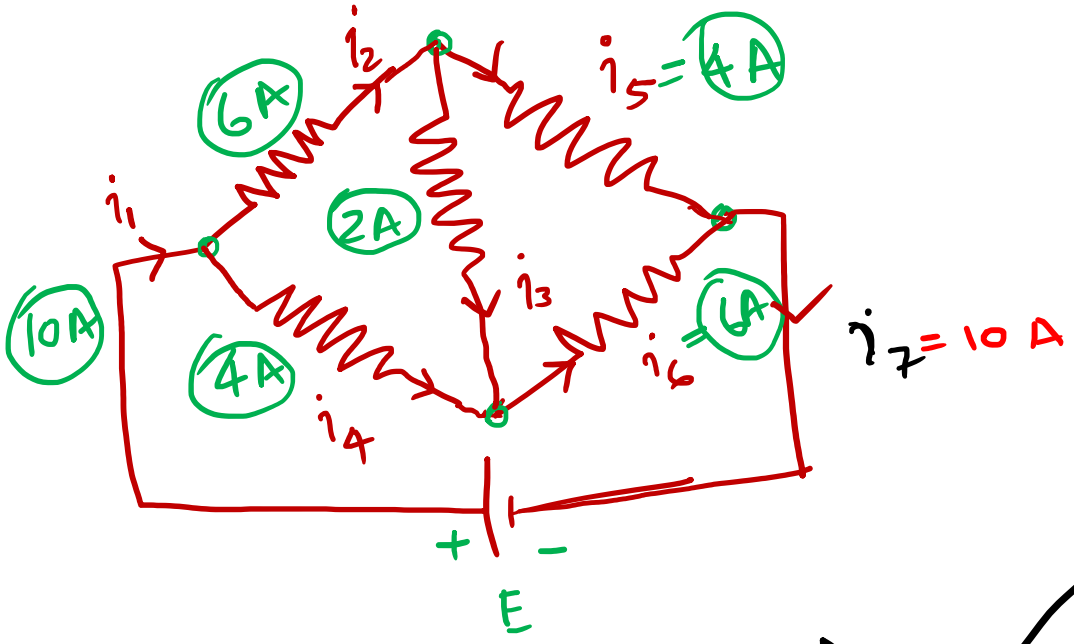

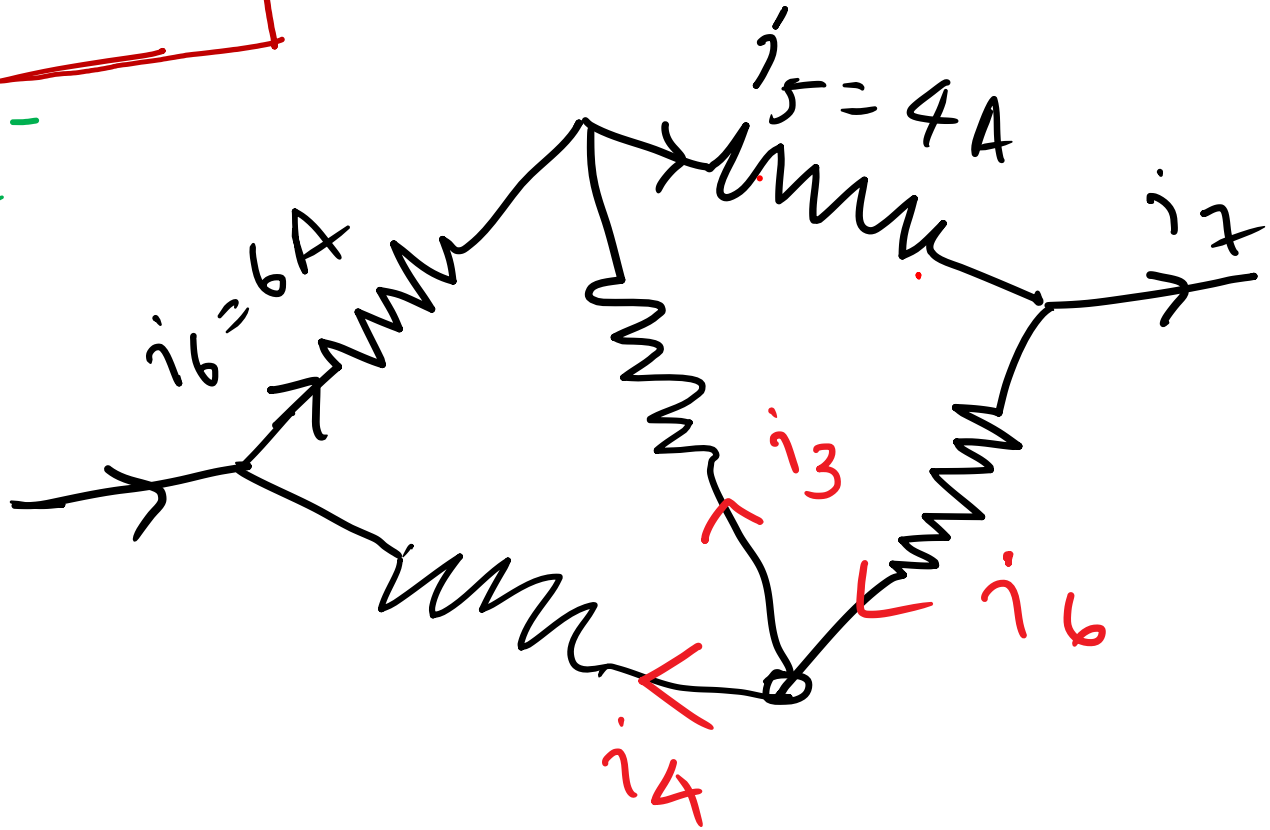

$i_1 = i_7 = 10A$
$i_2 = 6A$
$i_3 = 2A$
$i_4 = 4A$
$i_5 = 4A$
$i_6 = 6A$

$i_1 + i_4 = i_2 = 6A$

$i_4 = -i_1 + i_2 = -4A$

$i_5 = i_6 + i_7$

$i_6 = -6A$

$i_2 + i_3 = i_5$

$i_3 = -2A$

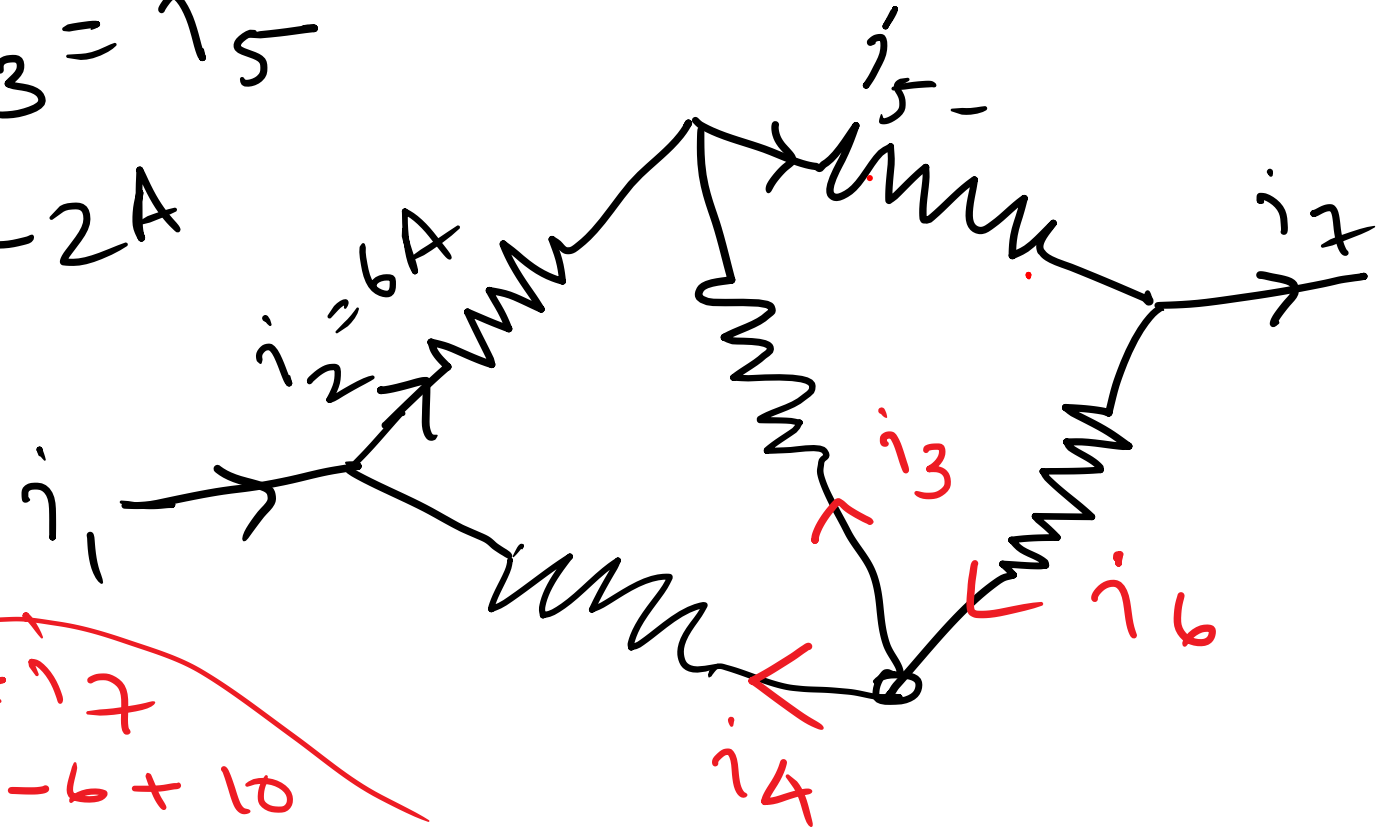

$i_5 = i_6 + i_7$

$4 = -6 + 10$

$i_1 = 10A$

$i_2 = 6A$

$i_3 = -2A$

$i_4 = -4A$

$i_5 = 4A$

$i_6 = -6A$

Inferences

- All the unknown currents determined in this problem assumed with reverse sense of sign has come out as '−'ve

- Assumed direction of currents in solving the problems doesn't have any implications on the final value of current.

$i_x = -1.684\ A$

$i_y = 4.21\ A$

$i_z = -2.1\ A$

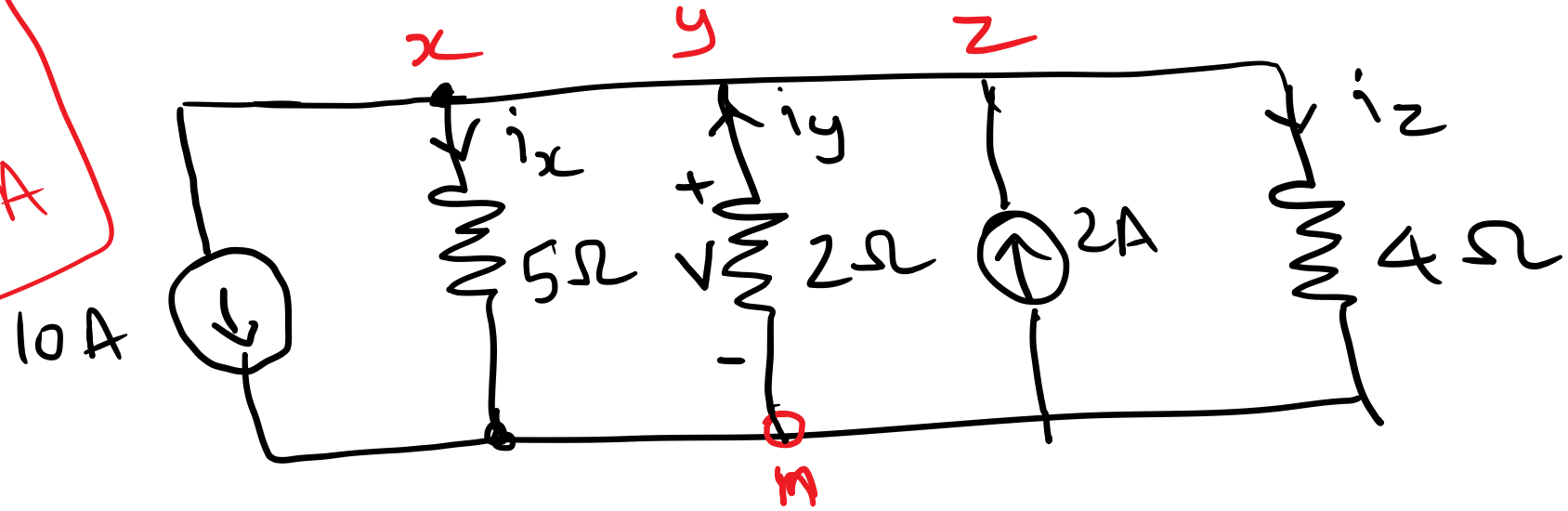

At node y

$$10 + i_x + i_z = i_y + 2$$

$$i_x - i_y + i_z = -8$$

$$i_x = \frac{V}{5}\ A \qquad i_z = \frac{V}{4}\ A$$

$$i_y = -\frac{V}{2}\ A$$

$$\frac{V}{5} + \frac{V}{2} + \frac{V}{4} = -8$$

$$V = -8 \times \frac{20}{19} = -8.42\ V$$

→ node n is at higher potential

Example 3 : Find i_1 and i_2

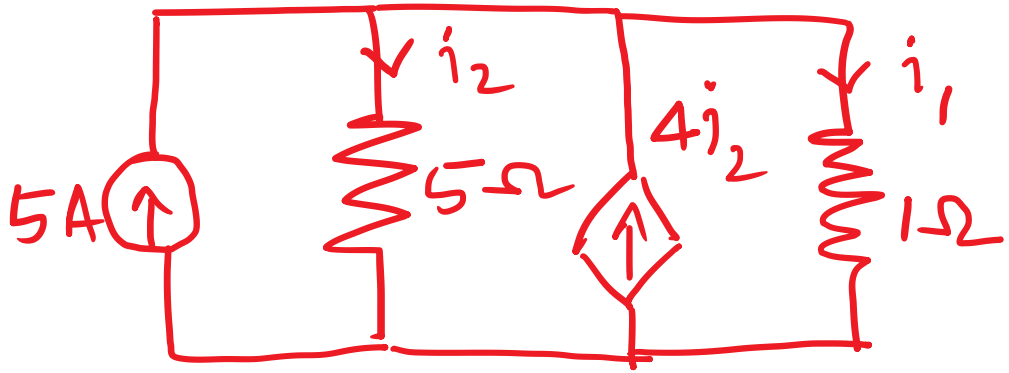

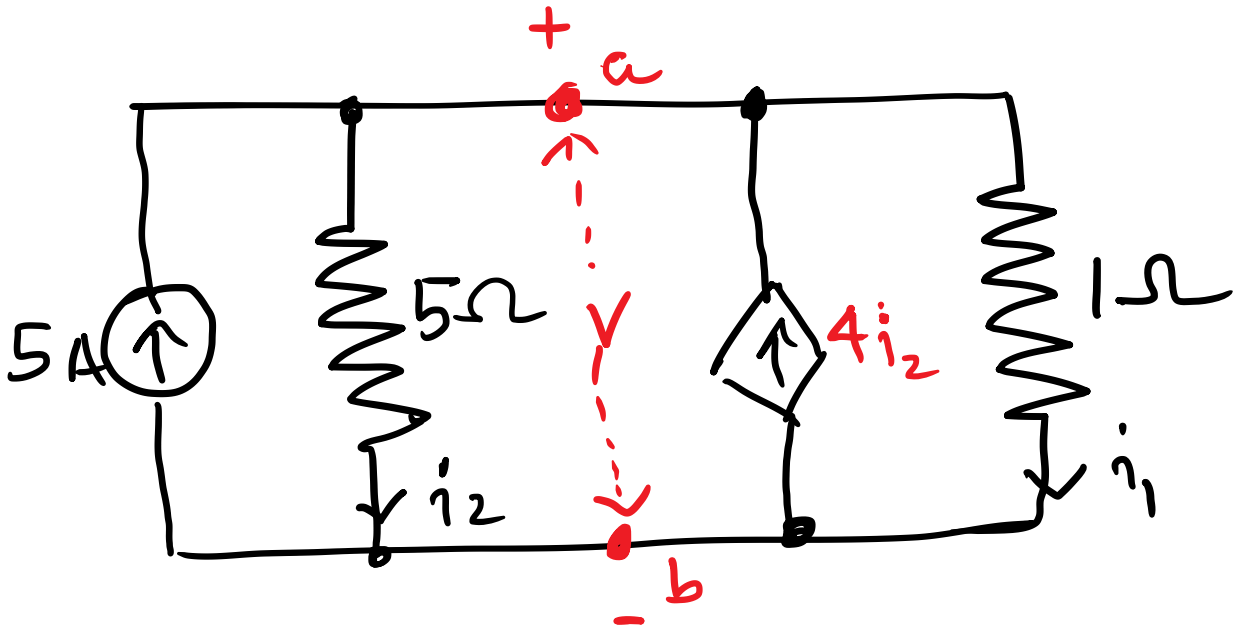

Let the voltage drop across 5Ω or 1Ω be V volts

KCL at a $\Rightarrow i_2 + i_1 = 5 + 4\hat{i}_2$

$i_1 - 3i_2 = 5$

$i_1 = \frac{V}{1\Omega} = V\,A$

$i_2 = \frac{V}{5}\,A$

$V - 3 \times \frac{V}{5} = 5$

$V = 12.5\,V$

$i_1 = 12.5\,A$

$i_2 = 2.5\,A$

Example 4

What is the power absorbed in the resistors. Assume $i_o = 1A$

Also find current from 2V source.

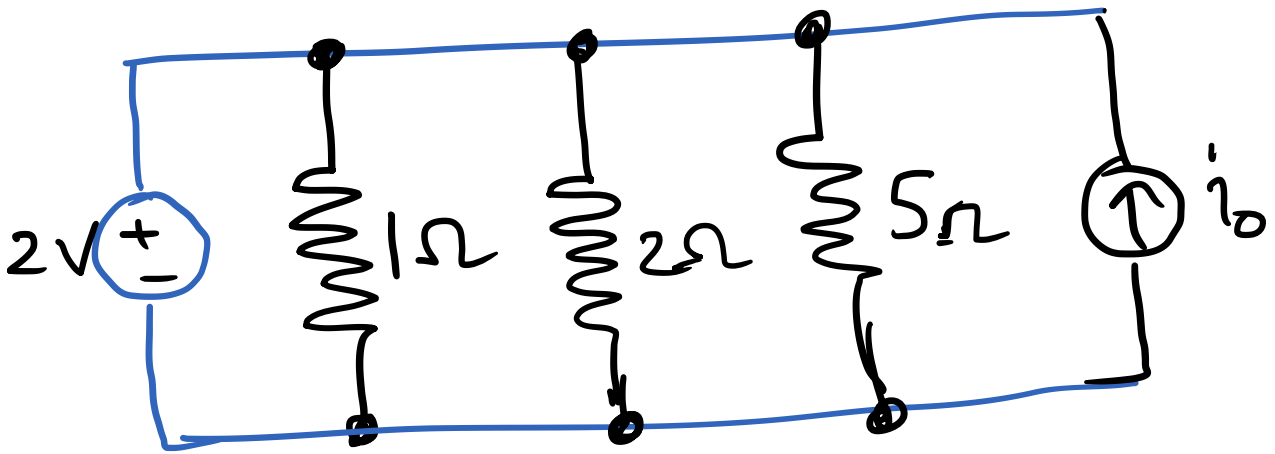

$i_0 = 1\,A$

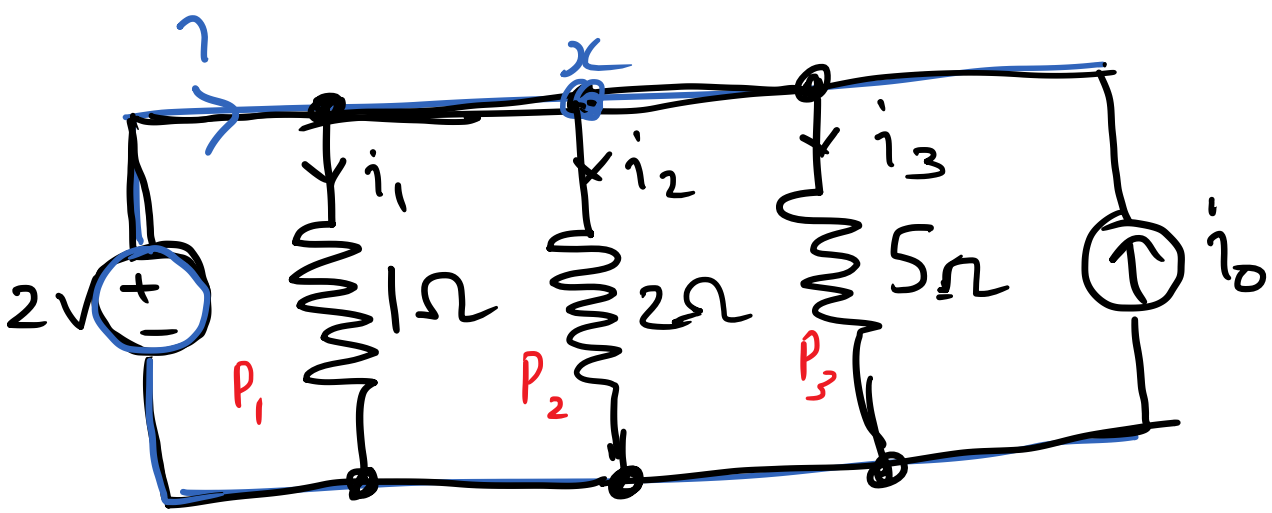

Apply KCL at node x

$i + i_0 = i_1 + i_2 + i_3$

$= 2 + 1 + 0.4 = \underline{\underline{3.4}}\,A$

$i = 3.4 - i_0 = \underline{\underline{2.4}}\,A$.

$i_1 = \frac{2}{1} = 2\,A$

$i_2 = \frac{2}{2} = 1\,A$

$i_3 = \frac{2}{5} = 0.4\,A$

$P_1 = 2^2 \times 1 = 4\,W$

$P_2 = 1^2 \times 2 = 2\,W$

$P_3 = 0.4^2 \times 5 = 0.8\,W$

Total power absorbed in the circuit

$4 + 2 + 0.8 = \underline{\underline{6.8\,W}}$

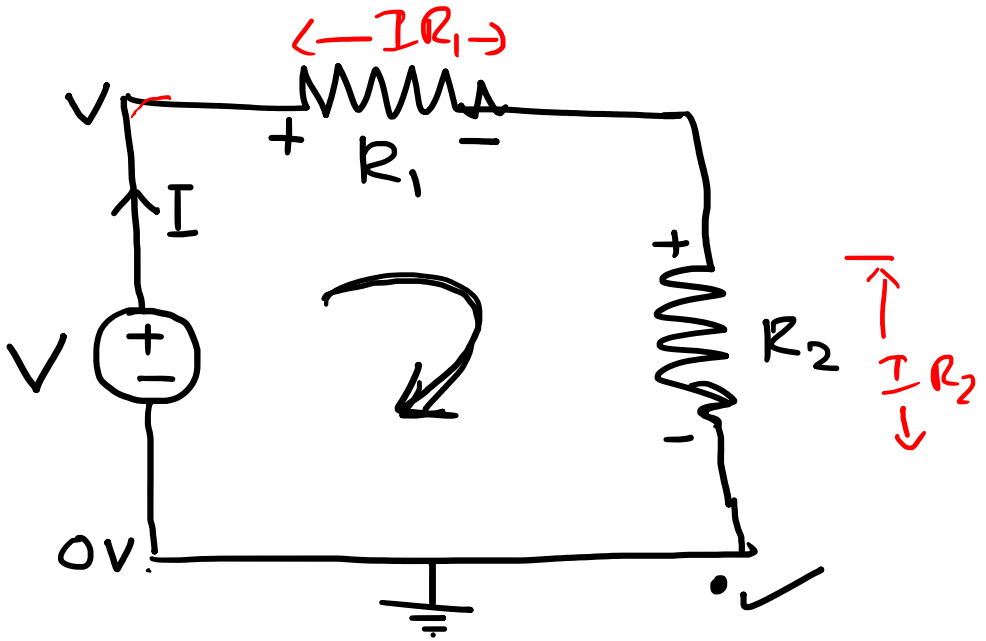

$$\boxed{-V + IR_1 + IR_2 = 0} \Rightarrow V = IR_1 + IR_2$$

$$\boxed{V - IR_1 - IR_2 = 0} \Rightarrow V = IR_1 + IR_2$$

Kirchhoff's second law is based on the principle of conservation of energy:

Kirchhoff's voltage law (KVL) states that the algebraic sum of all voltages around a closed path (or loop) is zero.

$$\sum_{m=1}^{M} v_m = 0$$

where M is the number of voltages in the loop (or the number of branches in the loop) and v_m is the mth voltage.

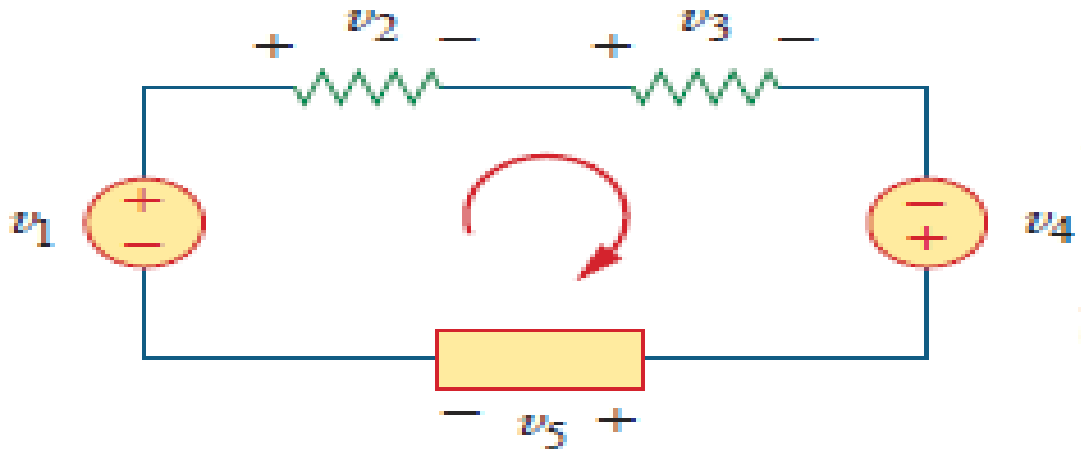

$$-v_1 + v_2 + v_3 - v_4 + v_5 = 0$$

$$v_2 + v_3 + v_5 = v_1 + v_4$$

Sum of voltage drops = Sum of voltage rises

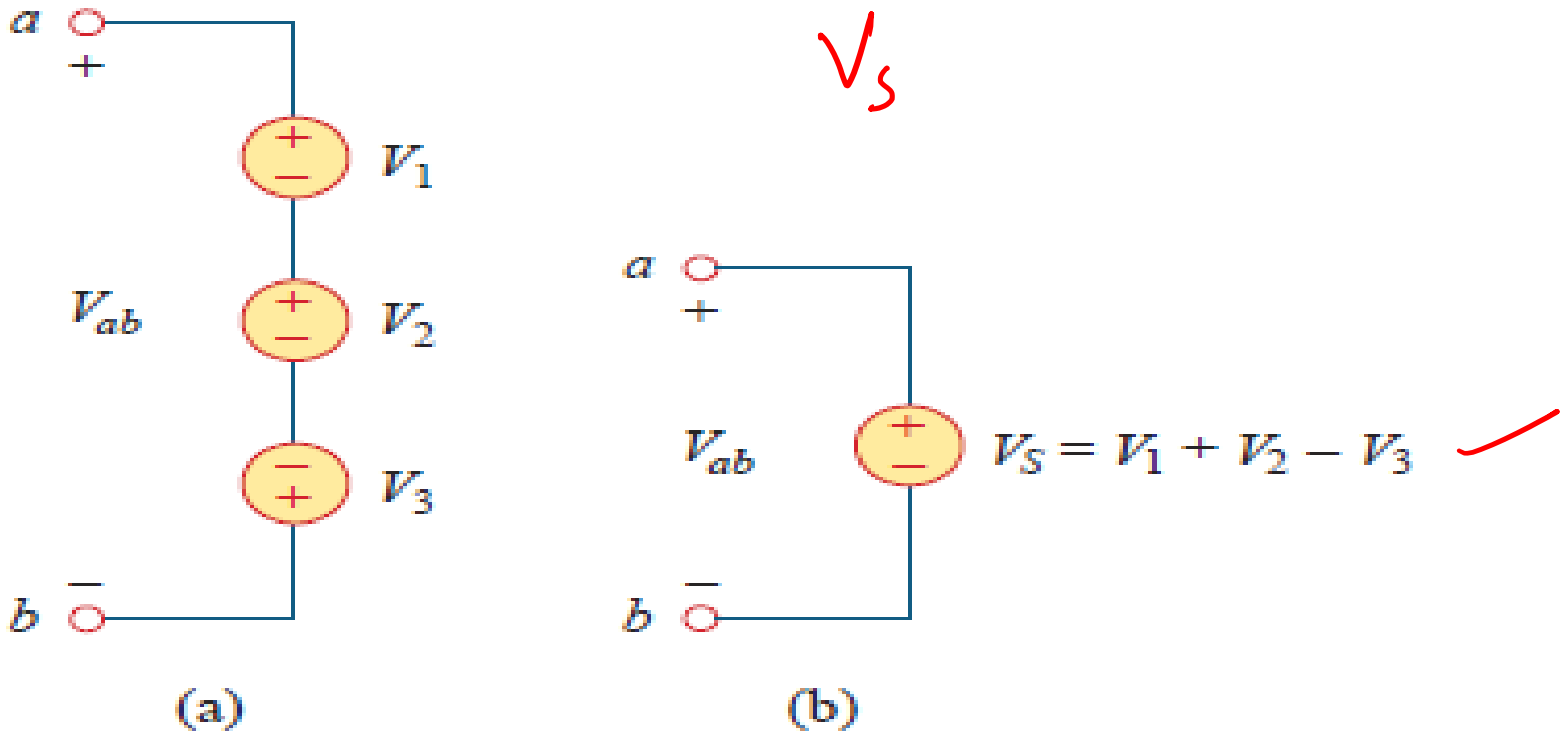

Voltage sources in series: (a) original circuit, (b) equivalent circuit.

$$V_{ab} = V_1 + V_2 - V_3$$

To avoid violating KVL, a circuit cannot contain two different voltages V_1 and V_2 in parallel unless $V_1 = V_2$.

Example

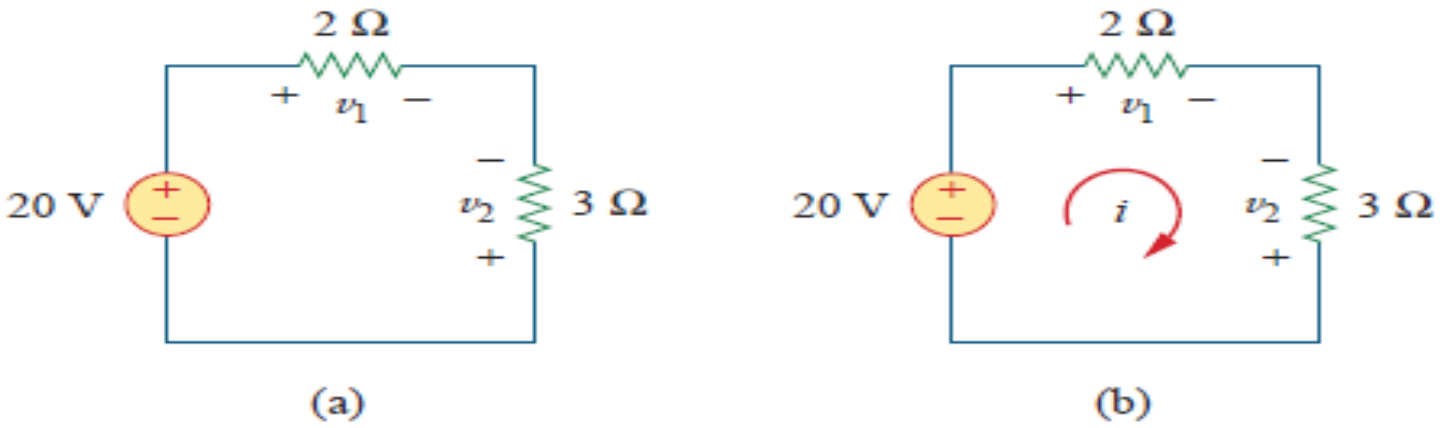

Solution:

To find v_1 and v_2, we apply Ohm's law and Kirchhoff's voltage law. Assume that current i flows through the loop as shown in Fig. 2.21(b). From Ohm's law,

$$v_1 = 2i, \qquad v_2 = -3i \tag{2.5.1}$$

Applying KVL around the loop gives

$$-20 + v_1 - v_2 = 0 \tag{2.5.2}$$

Substituting Eq. (2.5.1) into Eq. (2.5.2), we obtain

$$-20 + 2i + 3i = 0 \qquad \text{or} \qquad 5i = 20 \qquad \Rightarrow \qquad i = 4 \text{ A}$$

Substituting i in Eq. (2.5.1) finally gives

$$v_1 = 8 \text{ V}, \qquad v_2 = -12 \text{ V}$$

Example Determine v_o and i in the circuit shown in Fig.

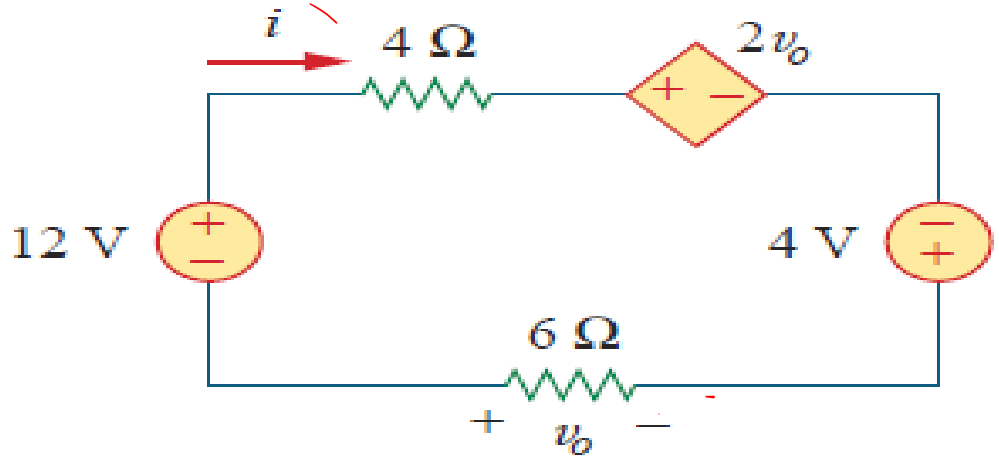

(a)

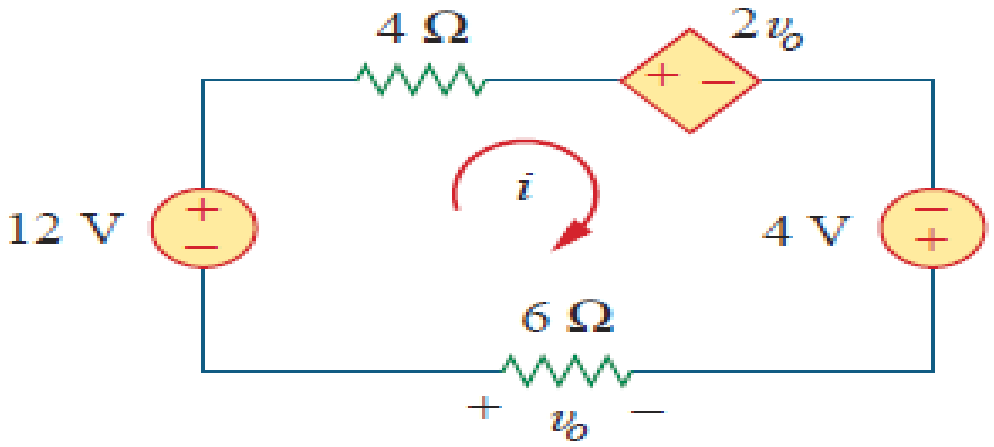

(b)

We apply KVL around the loop as shown in Fig.

$$-12 + 4i + 2v_o - 4 + 6i = 0$$

Applying Ohm's law to the 6-Ω resistor gives

$$v_o = -6i$$

$$-16 + 10i - 12i = 0 \quad \Rightarrow \quad i = -8 \text{ A}$$

$$v_o = 48 \text{ V}.$$

Example Find currents and voltages in the circuit shown in Fig.

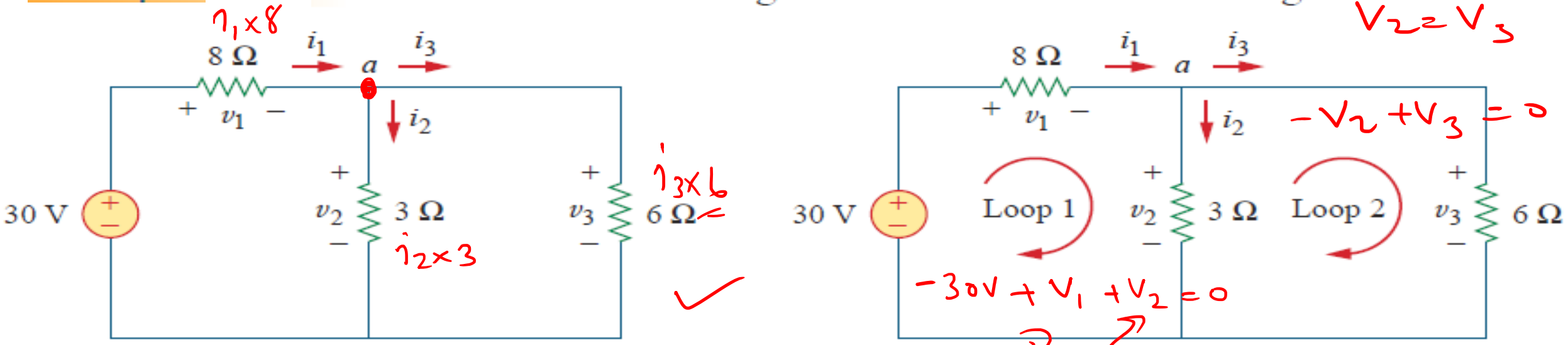

We apply Ohm's law and Kirchhoff's laws. By Ohm's law,

$$v_1 = 8i_1, \qquad v_2 = 3i_2, \qquad v_3 = 6i_3$$

Since the voltage and current of each resistor are related by Ohm's law as shown, we are really looking for three things: (v_1, v_2, v_3) or (i_1, i_2, i_3). At node a, KCL gives

$$i_1 - i_2 - i_3 = 0$$

Applying KVL to loop 1 $\Rightarrow$ $-30 + v_1 + v_2 = 0$

We express this in terms of i_1 and i_2 $\Rightarrow$ $-30 + 8i_1 + 3i_2 = 0$

$$i_1 = \frac{(30 - 3i_2)}{8}$$

Applying KVL to loop 2, $-v_2 + v_3 = 0$ $\Rightarrow$ $v_3 = v_2$

$$6i_3 = 3i_2 \quad \Rightarrow \quad i_3 = \frac{i_2}{2}$$

$i_1 - i_2 - i_3 = 0$ $\quad \frac{30 - 3i_2}{8} - i_2 - \frac{i_2}{2} = 0$ $\quad$ or $i_2 = 2$ A

$i_1 = 3$ A, $\quad i_3 = 1$ A, $\quad v_1 = 24$ V, $\quad v_2 = 6$ V, $\quad v_3 = 6$ V

Example → Find V_s using Kirchoff's laws

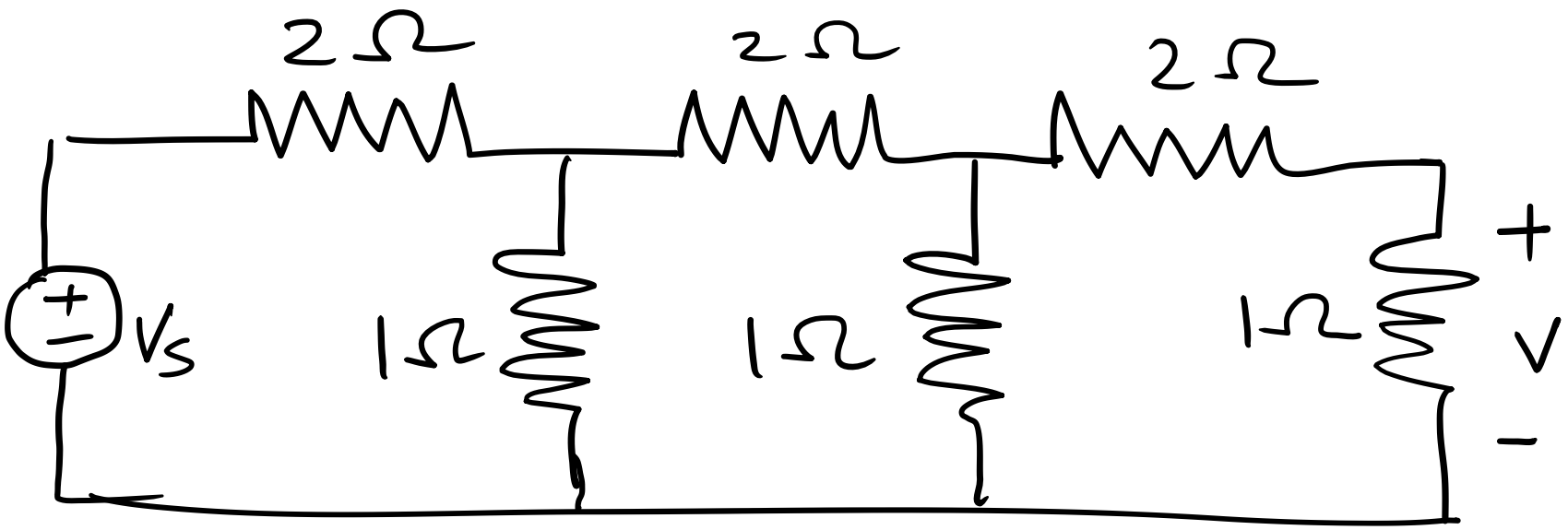

$V_2 = V_{cf}$

$= V_{cd} + V_{de}$

$V_1 = V_{de}$

$V_{cd} = i_{de} \times 2$

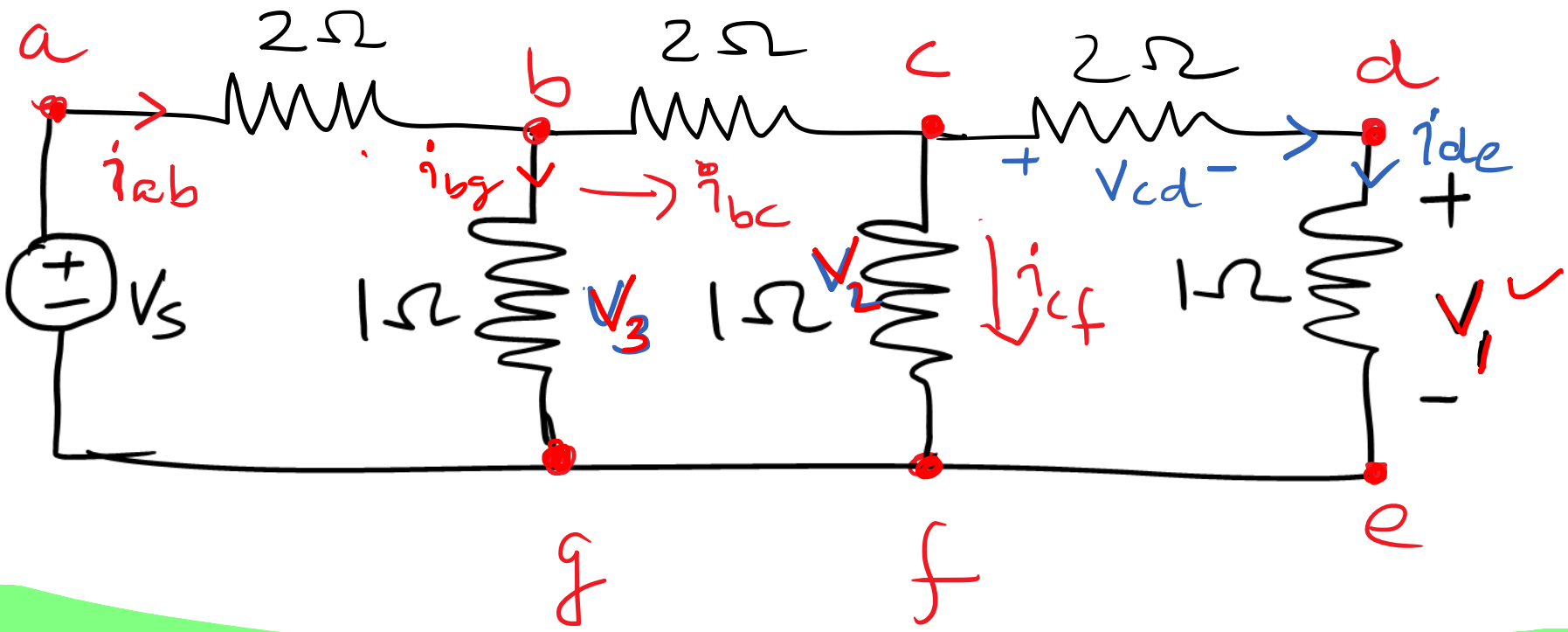

$\therefore V_2 = i_{de} \times 2 + V_1$

$= \frac{V_1}{1} \times 2 + V_1$

$= 3V_1$

$i_{cf} = \frac{V_{cf}}{1} = V_2 = 3V_1$ Amp

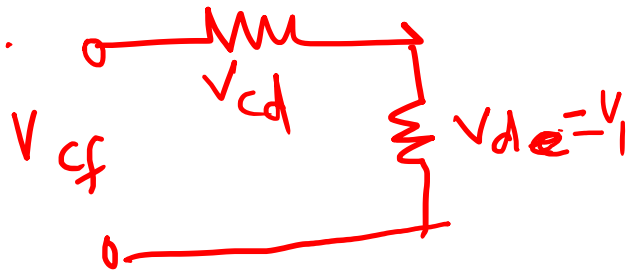

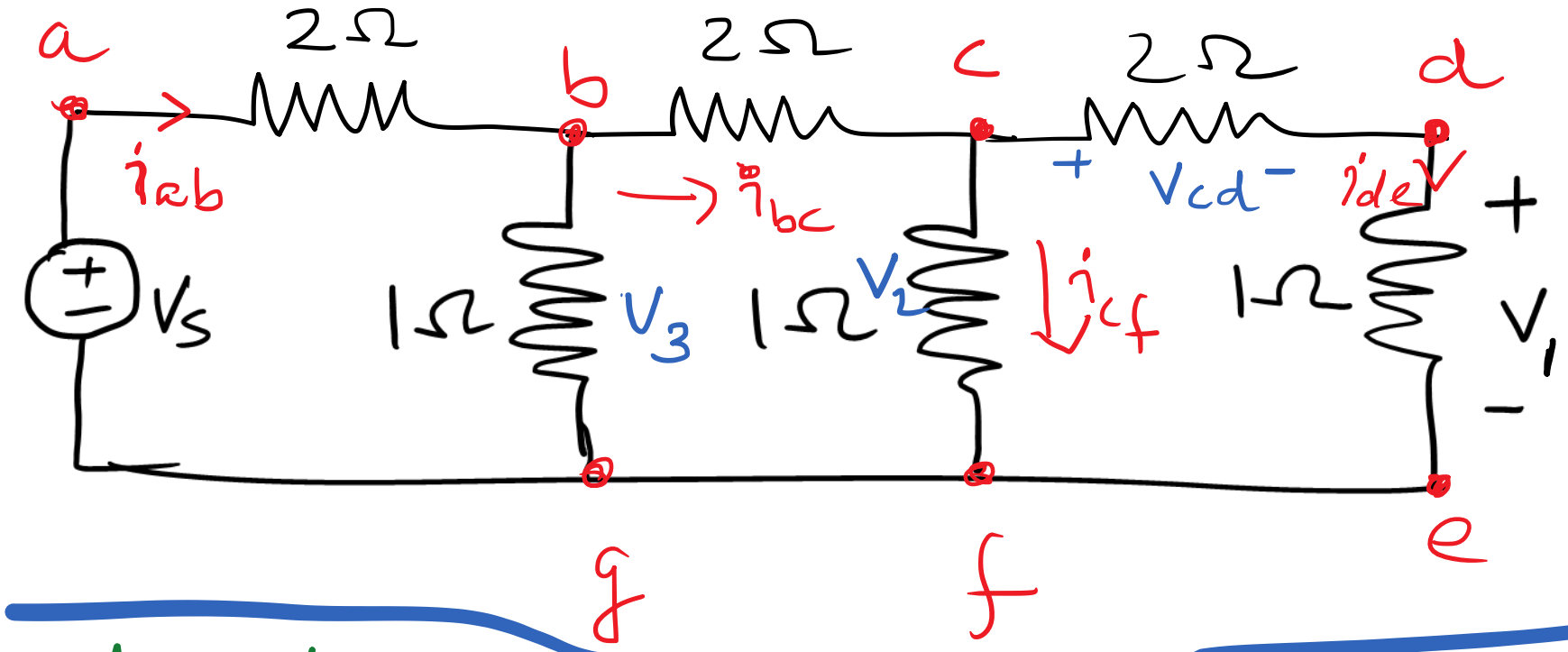

$$V_3 = V_{bc} + V_{cf}$$

$$V_{bc} = [i_{cf} + i_{de}] \times 2$$

$$V_{cf} = i_{cf} \times 1 = 3V_1$$

$$V_3 = [i_{cf} + i_{de}] \times 2 + 3V_1$$

$$= (3V_1 + V_1) \times 2 + 3V_1$$

$$= 8V_1 + 3V_1 = \underline{\underline{11V_1}}$$

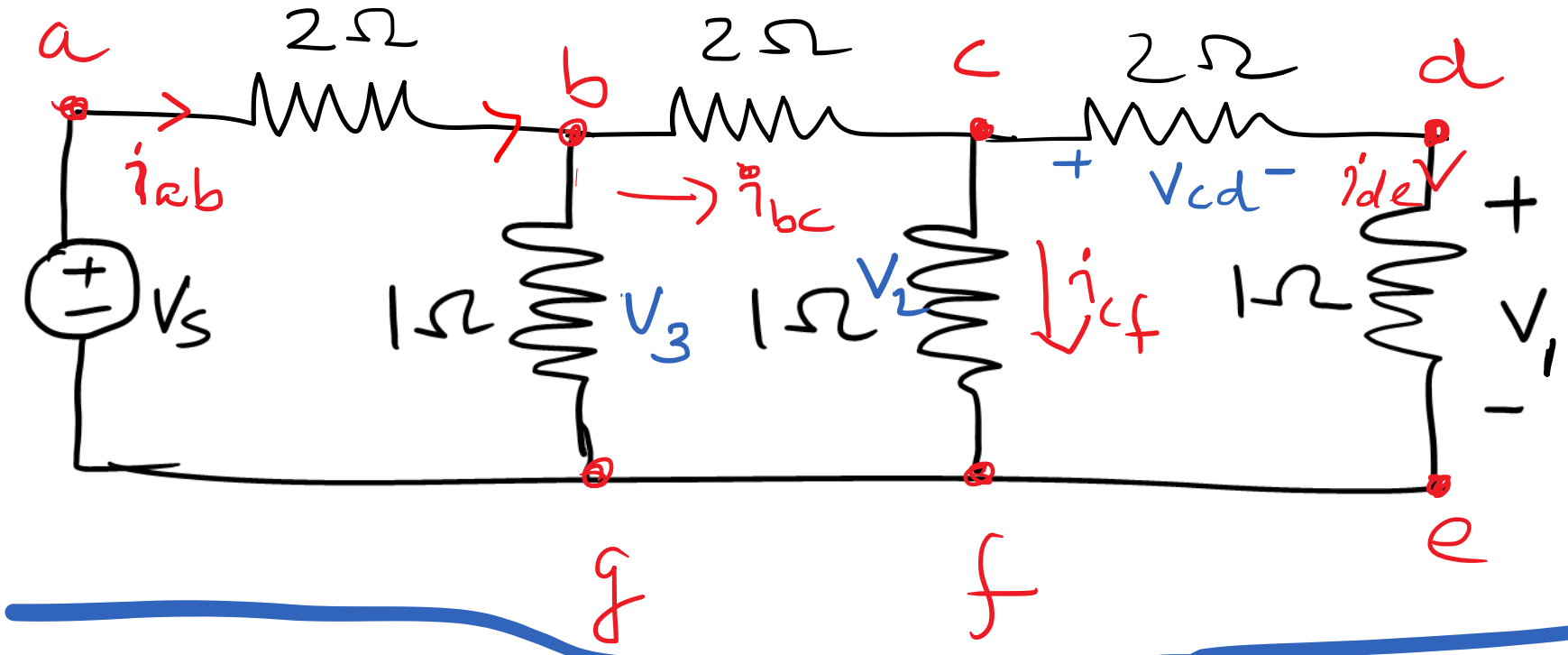

Let $V_1 = V$

$$V_s = 41V$$

$$i_{ab} = i_{bg} + i_{bc}$$

$$= \frac{V_3}{1} + \left[i_{cf} + i_{de}\right]$$

$$= 11V_1 + 3V_1 + V_1 = 15V_1$$

$$V_s = V_{ab} + V_3$$

$$= i_{ab} \times 2 + V_3$$

$$= 30V_1 + 11V_1 = 41V_1$$

Find the current & power dissipated in the 5 Ω resistor in the circuit shown

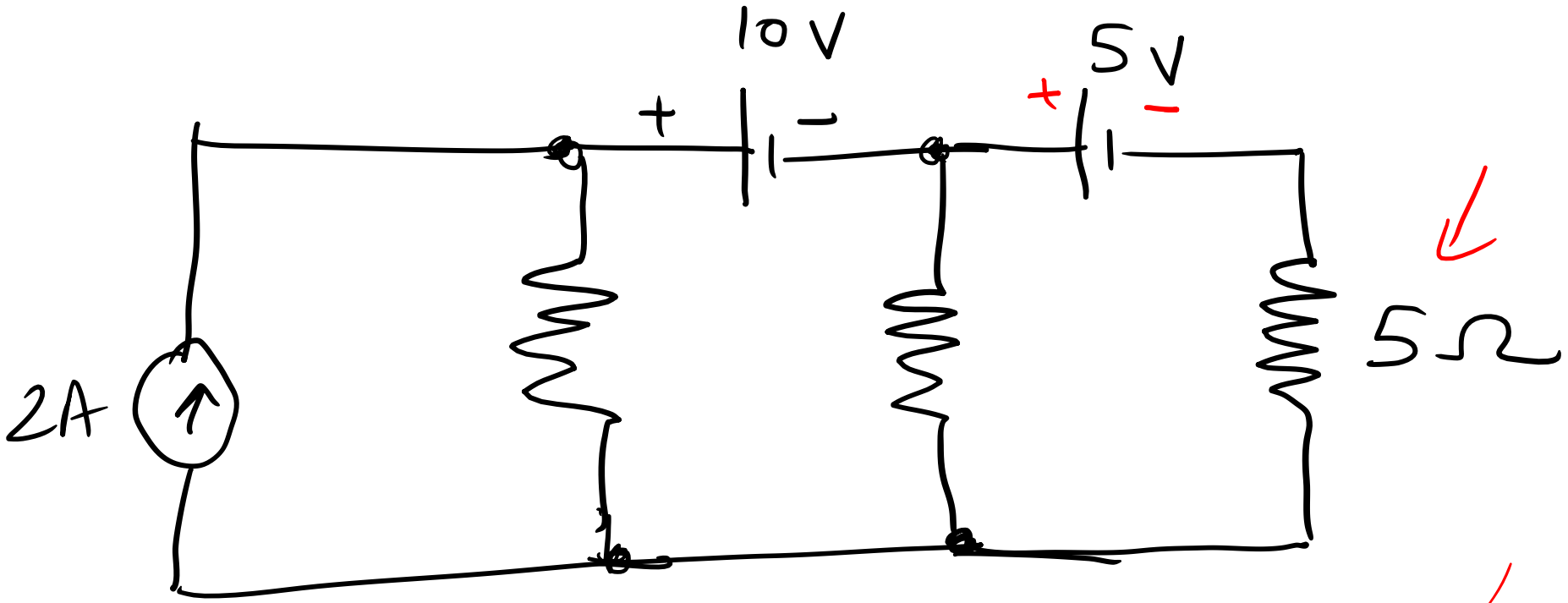

P^2R

Ans ⇒ $9/13$ A