Book Reference:J. D. Roy Choudhury,
Linear Integrated Circuits, 2018, 5th Edition, New-Age International Publishers, New Delhi.

Module 4

Operational amplifier, Ideal and Nonideal characteristics of OP-AMP, DC and AC characteristics - Operational amplifier with negative feedback: Voltage Series, Voltage Shunt feedback amplifier - Applications of OP-AMP - summing, scaling, and averaging amplifiers, I/V and V/I converter, Integrator, Differentiator, Instrumentation amplifiers and Precision Rectifiers

Integrated Circuits

An **integrated circuit** or **monolithic integrated circuit** (also referred to as an **IC**, a **chip**, or a **microchip**) is a set of electronic circuits on one small flat piece (or "chip") of semiconductor material, usually silicon.

An Integrated Circuit(IC) is a miniature ,low cost electronic circuit consisting of active and passive components fabricated together on as single crystal of silicon

Erasable programmable read-only memory (EPROM) integrated circuits in dual in-line packages

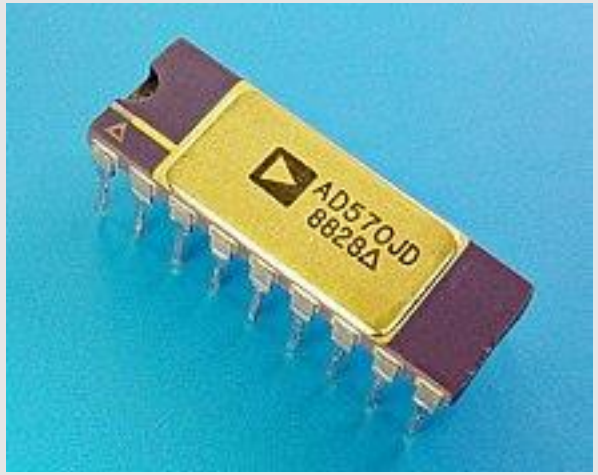

A-to-D converter IC in a DIP

Intel 8742, an 8-bit NMOS microcontrollerthat includes a CPU running at 12 MHz, 128 bytes of RAM, 2048 bytes of EPROM, and I/O in the same chip

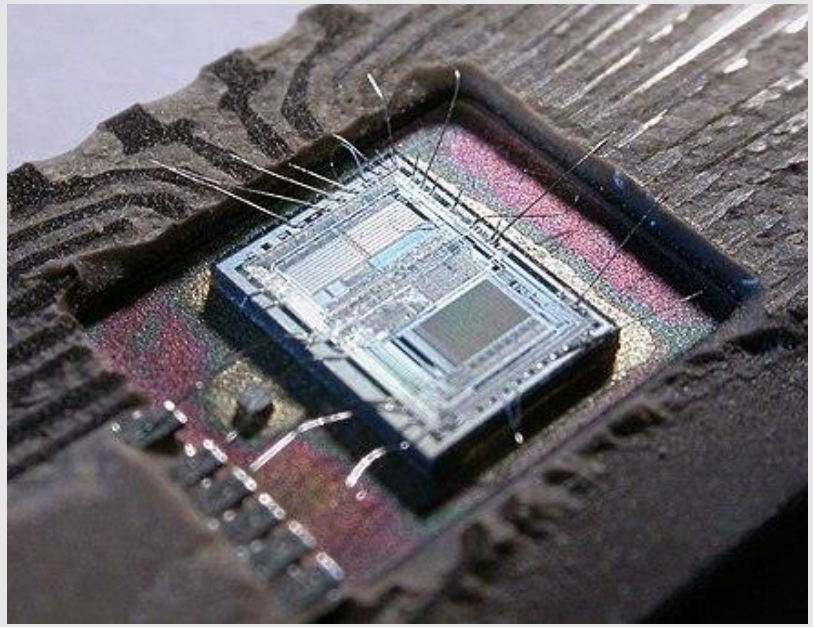

Advantages and Features

- Miniaturization-Increased Equipment density
- Cost reduction
- Reliability increases due to the elimination od soldered Joints
- Improved functional performance
- Increased operating speeds
- Reduction in Power consumption

https://www.chipsetc.com

Classification:

Analog, Digital and Combination of analog and Digital on Single

SSI<

s),L

es)

,VLS

kage (3,5,8,10&12)

2.Dual in Packages (12,14,16,20,40)

3.Flat Package

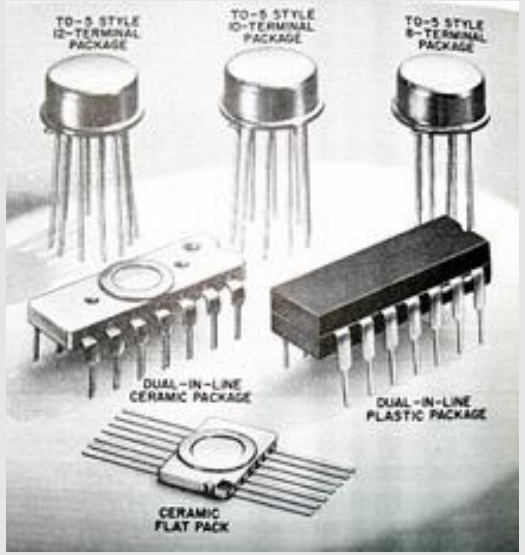

Introduction

- Linear Integrated Circuits (LIC) are used in audio and radio communication, medical electronics, instrumentation control, etc
- Operational amplifier (op-amp) is multi-terminal device
- Circuit schematic:
  * Two input terminals:
   inverting input terminal (-)
  non-inverting input terminal (+)
- One Output terminal
- Packages: Metal can(TO) package; Dual-in-line package(DIP) and flat package or flat pack

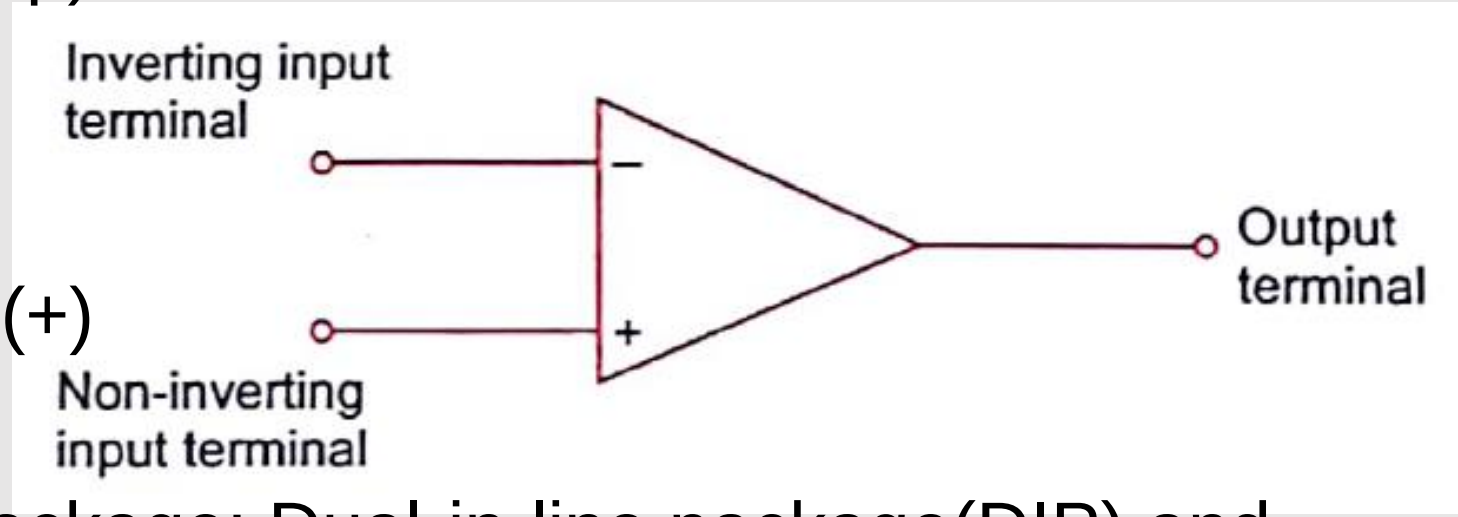

Introduction

- **8 pin metal can package**
  with following pin configuration:

2: Inverting input

3: Non-inverting input

6: Output

7: V+ power supply

4: V- power supply

1, 5: Offset null

8: NC (no connection)

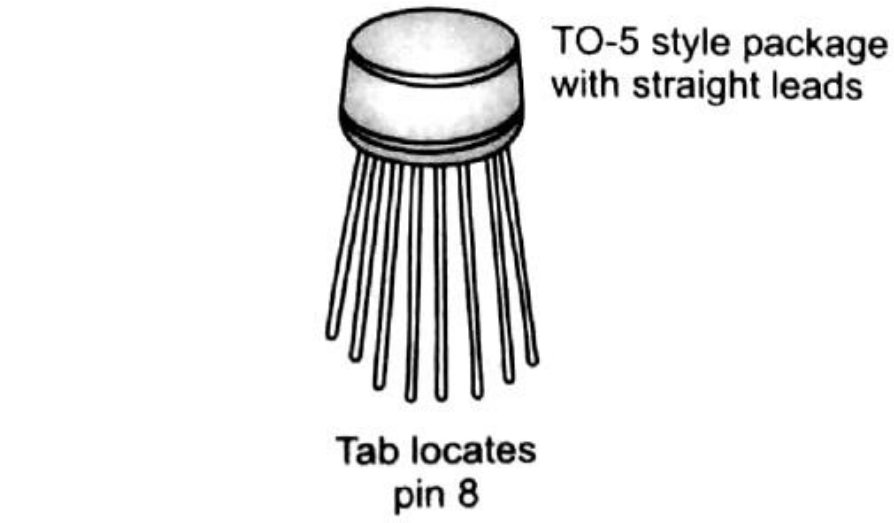

(a) 8-pin Metal can

Introduction

- **Dual in-line package**
  with following pin configuration:

2: Inverting input

3: Non-inverting input

6: Output

7: V+ power supply

4: V- power supply

1, 5: Offset null

8: NC (no connection)

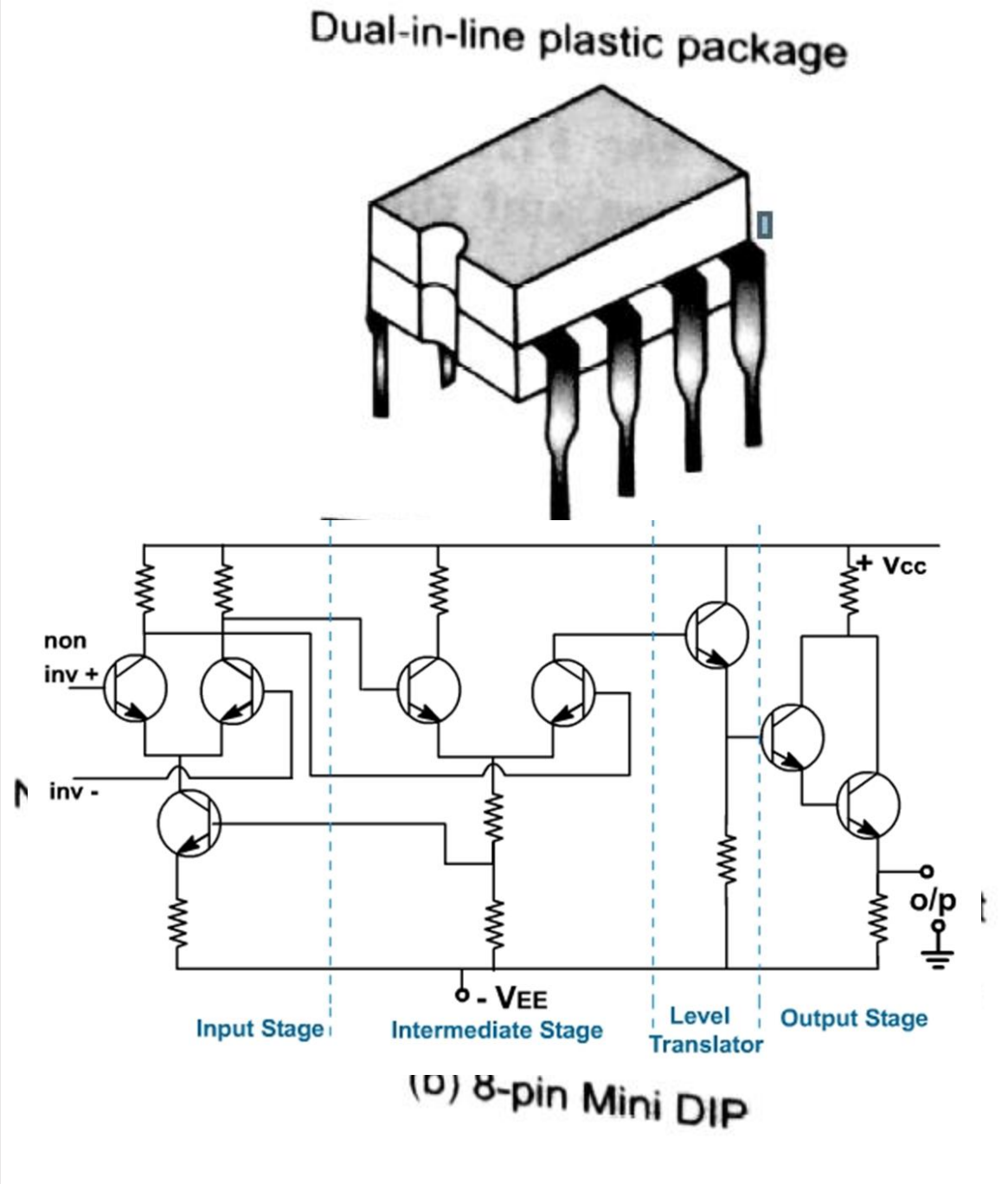

Introduction

- **14 pin Dual in-line package**

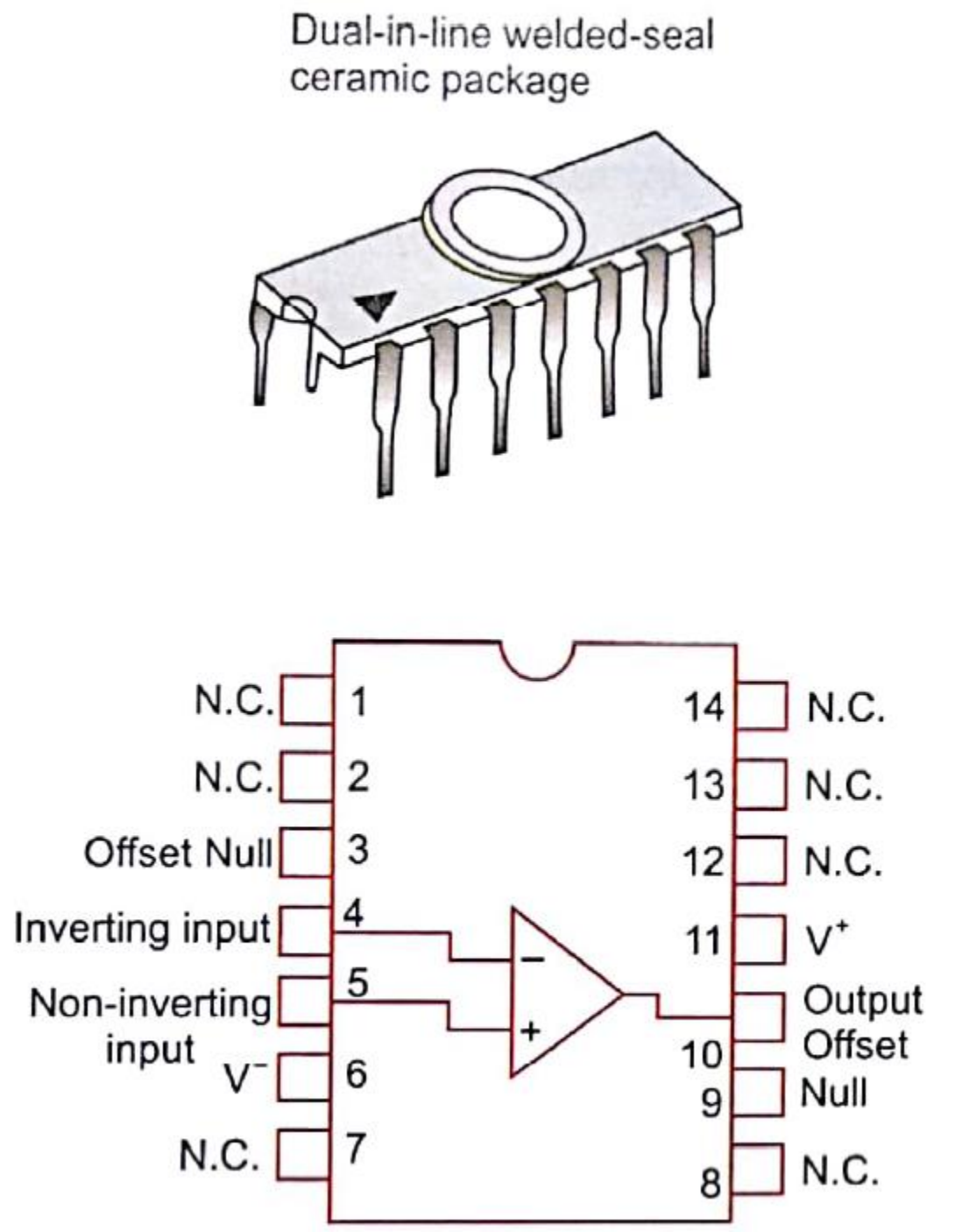

Introduction

- **Ceramic flat package (10 pin)**

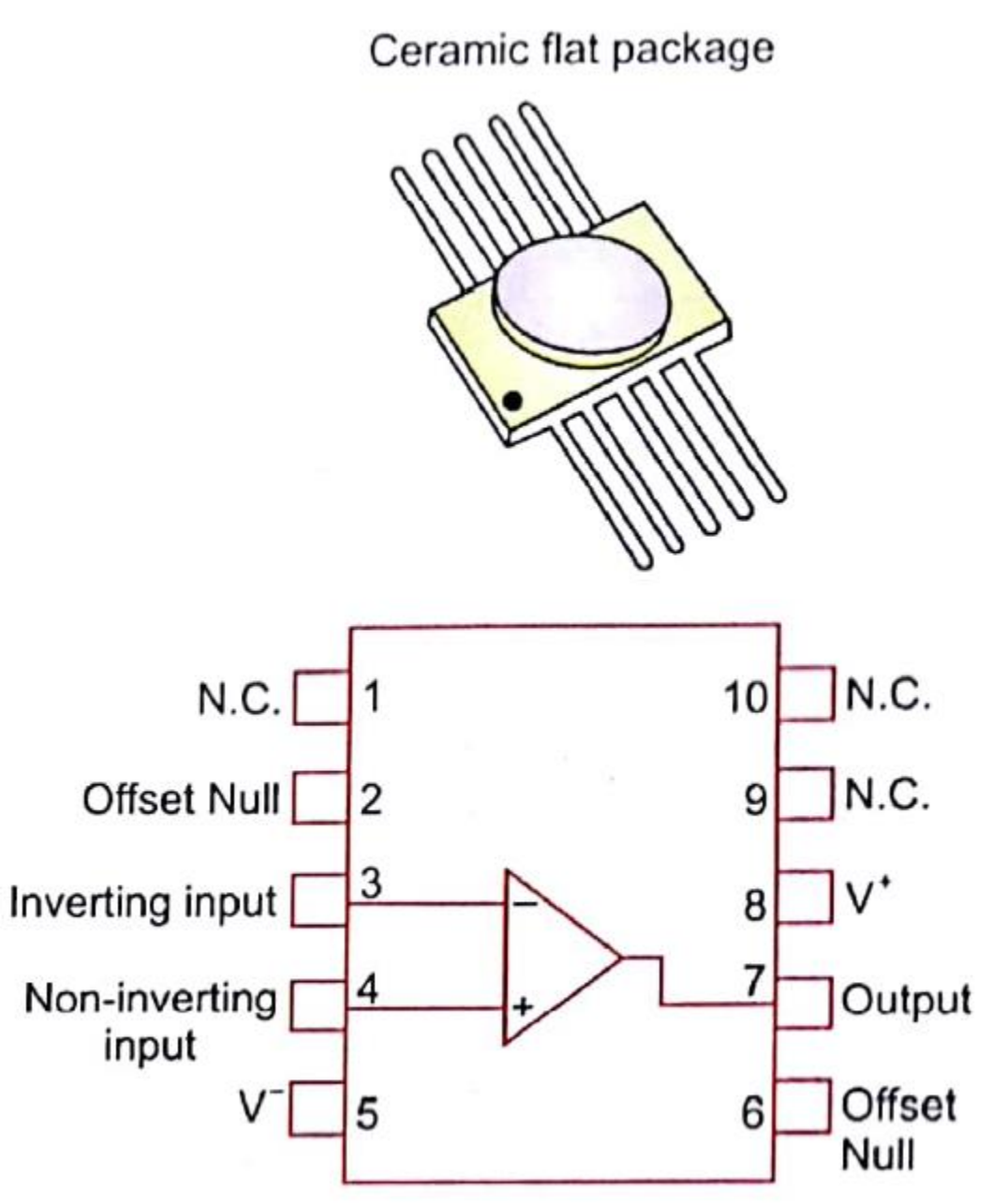

Introduction

- Mostly used:

8 pin mini DIP (dual in-line package)

<u>Power supply</u> at PINs 7(V+) and 4(V-)

Usually $\pm 15V$

Range: ± 5 V to ± 22 V

Only some OpAMPs have ground
Mostly do not have ground.

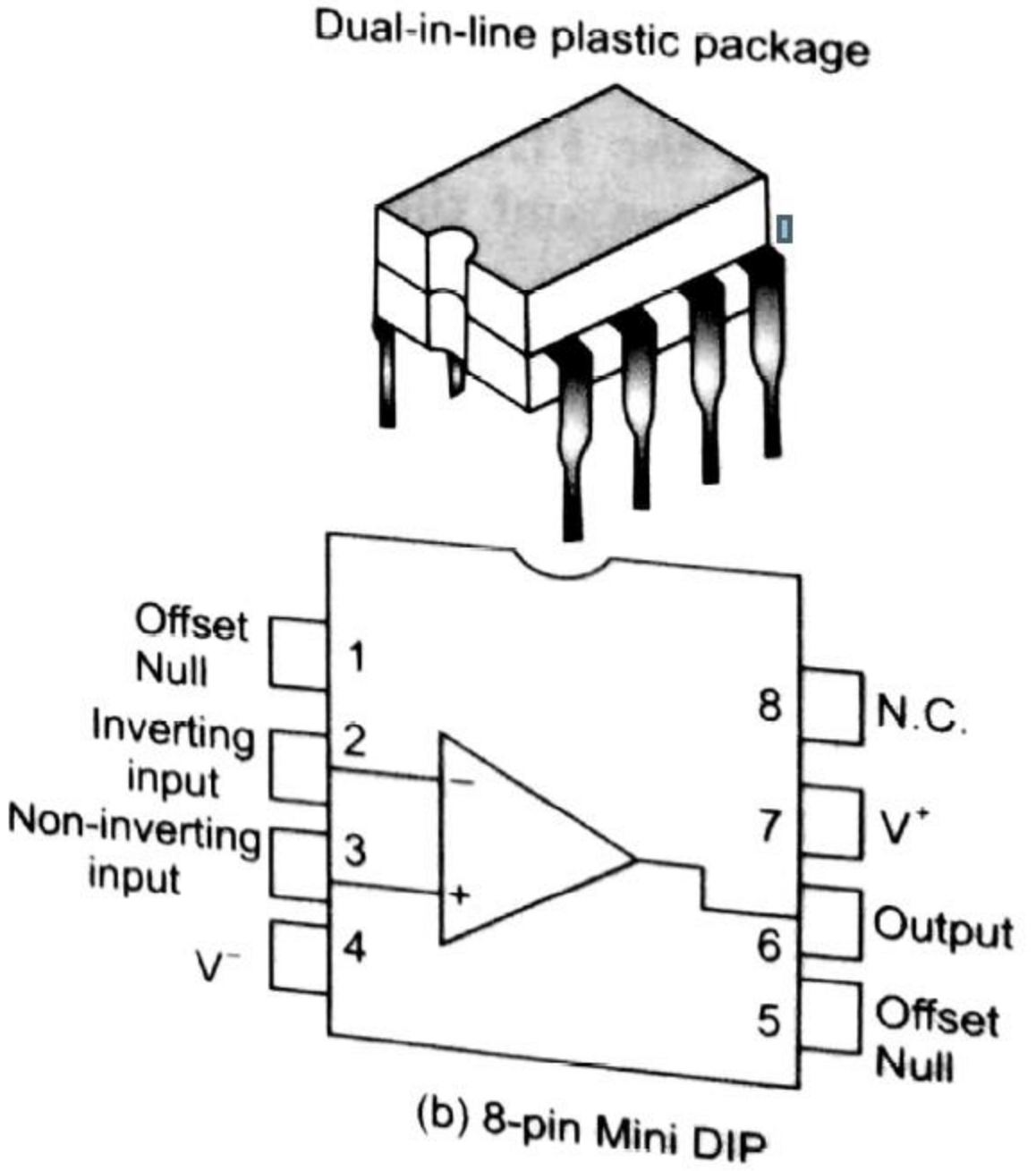

Introduction

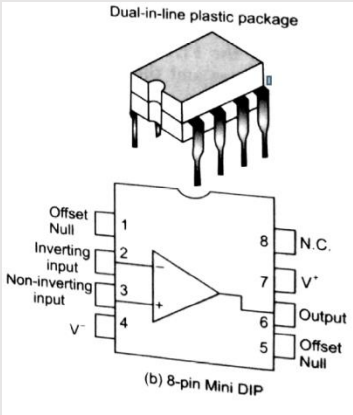

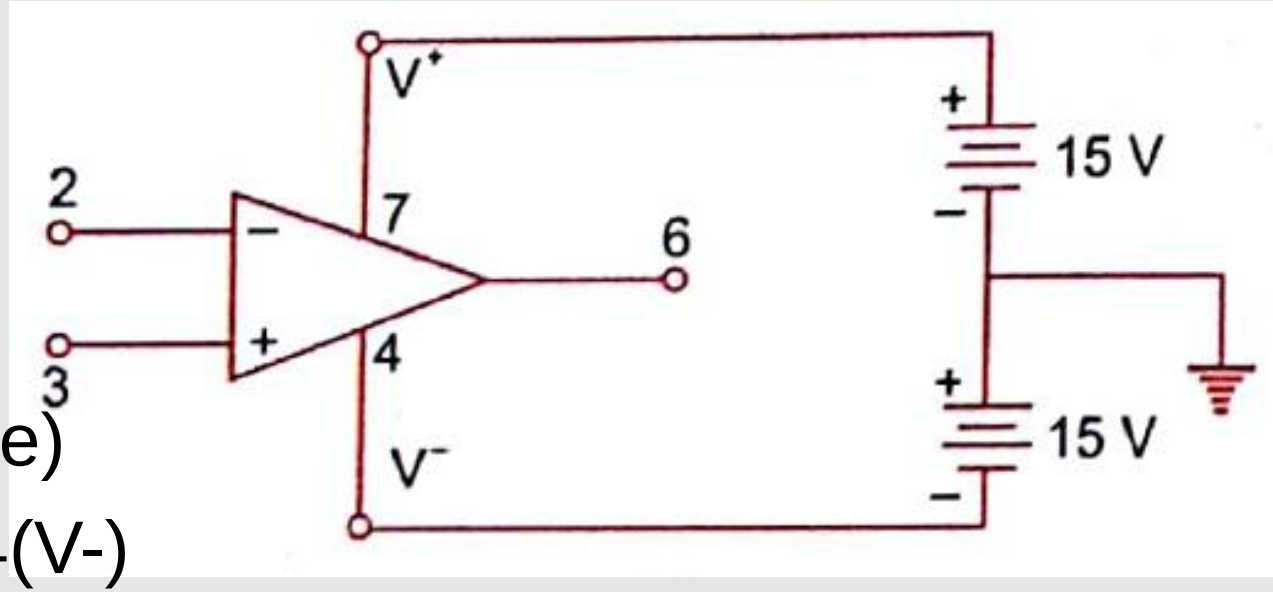

- Mostly used:

8 pin mini DIP (dual in-line package)

<u>Power supply</u> at PINs 7(V+) and 4(V-)

Usually $\pm 15V$

Range: ± 5 V to ± 22 V

Only some OpAMPs have ground
Mostly do not have ground.

Power supply is connected as:

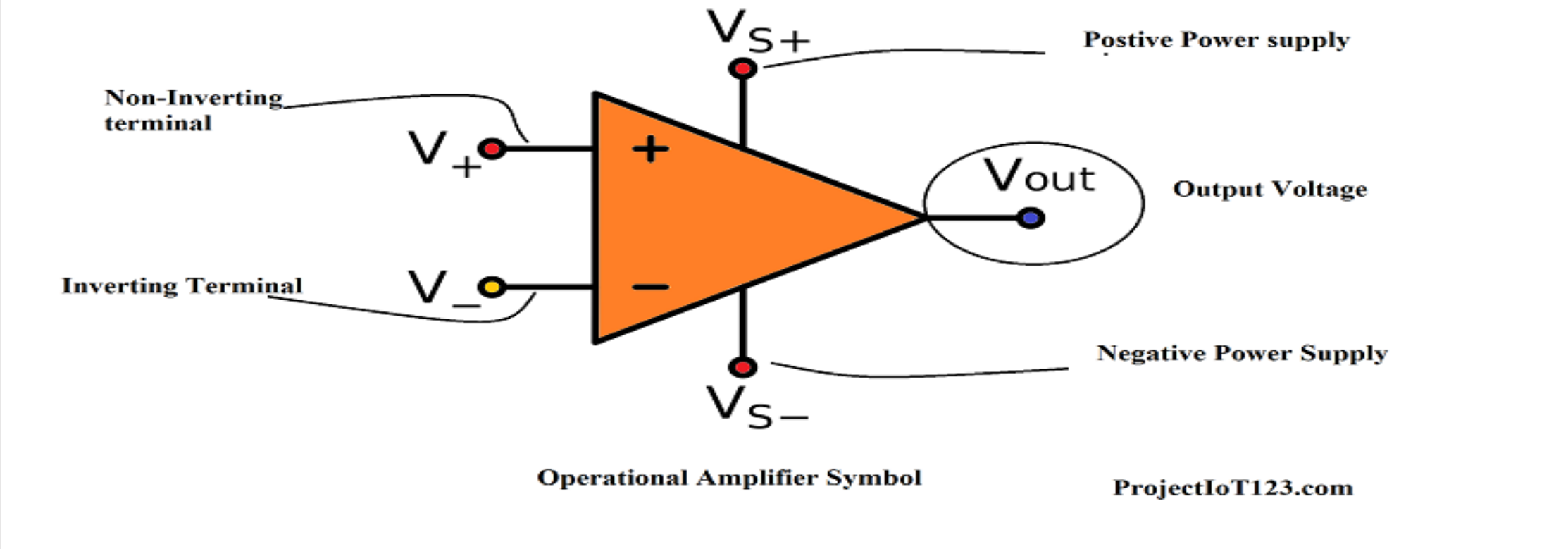

Source:ProjectIo123.com

1. Introduction

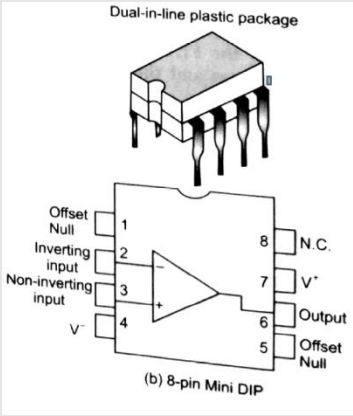

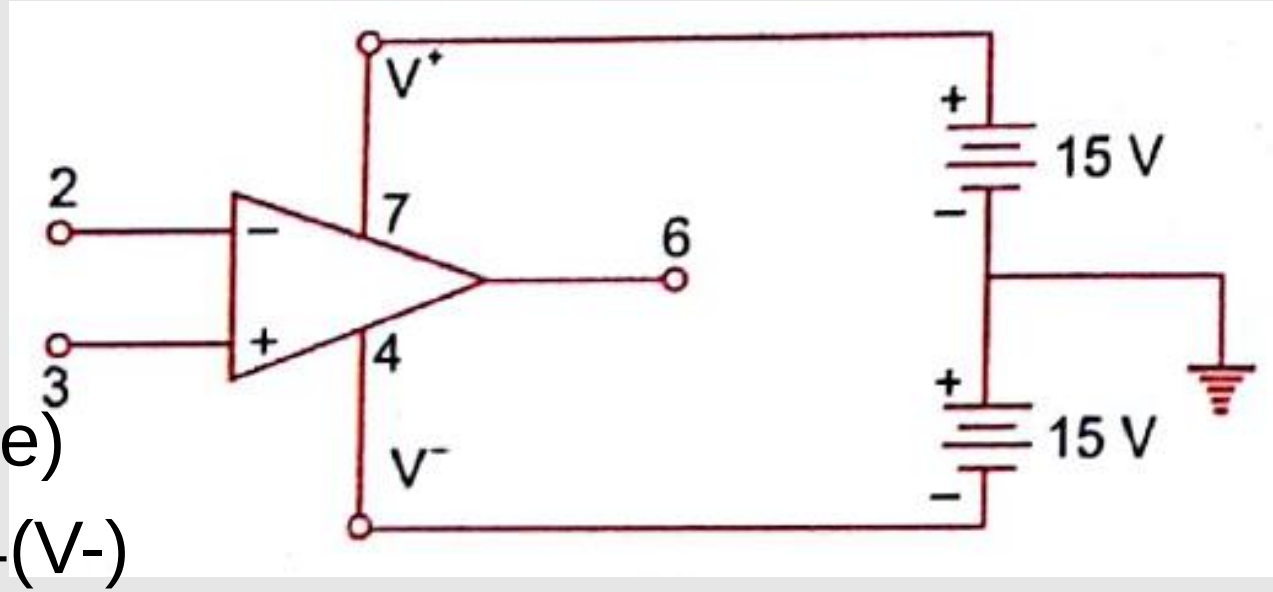

- Mostly used:

8 pin mini DIP (dual in-line package)

<u>Power supply</u> at PINs 7(V+) and 4(V-)

<u>Equivalent</u>:

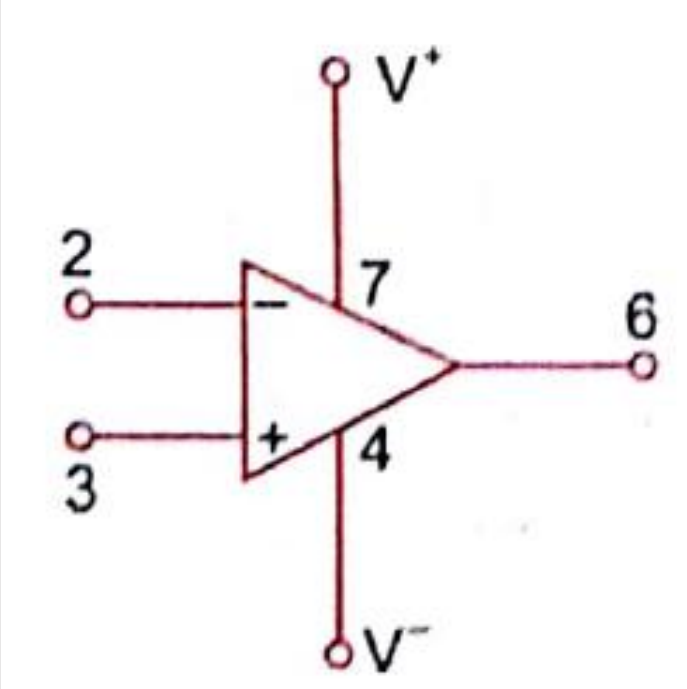

Usually $\pm 15V$

Range: ± 5 V to ± 22 V

Only some OpAMPs have ground
Mostly do not have ground.

Power supply is connected as:

1. Introduction

- MOST Widely used Op-AMP
- LM741
  and its improved versions (741C, 741A, 741E, 741S, 741SC)

2. IDEAL Operational Amplifier

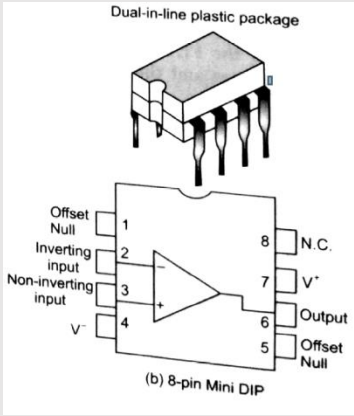

- For simplicity, other terminals have not been shown in the schematic symbol of Op-amp (May use only input and output terminals for representation)
- + and – symbols represent non-inverting and inverting input terminals respectively

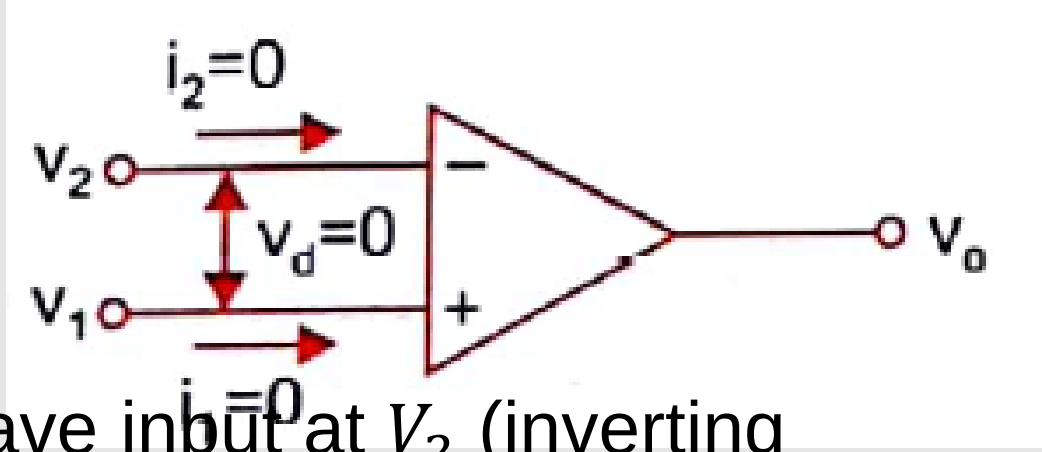

- If $V_1 = 0$, and if the input is a sinusoidal wave input at V_2 (inverting terminal) then the output V_0 has $180°$ phase shift (out of phase with input)
- If $V_2 = 0$, and if the input is a sinusoidal wave input at V_1 (non-inverting terminal) then the output V_0 has $0°$ phase shift (in phase with input)

IDEAL OP-AMP

Characteristics	Symbol	Ideal Values	Practical values
Open loop voltage gain	A_{OL}	∞	200000
Input resistance	R_n	∞	2 MΩ
Output resistance	R_0	0	75 Ω
Offset voltage	V_0	0	6 mV
Bandwidth	BW	∞	1 MHz
CMRR	ρ	∞	90 dB
Slew rate	S	∞	0.5 V/μs

Simple open loop operation

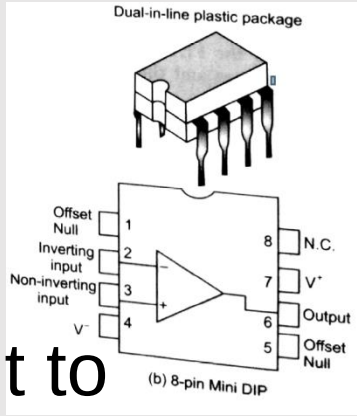

- Simplest way: Open loop – **<u>do not connect</u>** any part of output to any part of input
- As v_1 and v_2 are applied at terminals: non-inverting(+) and inverting(-)
- For infinite gain: v_0 will be in positive saturation $(+V_{sat})$ if $v_1 > v_2$
  negative saturation $(-V_{sat})$ if $v_2 > v_1$
- Amplifier acts as:
  switch or
  voltage comparator or
  zero crossing detector

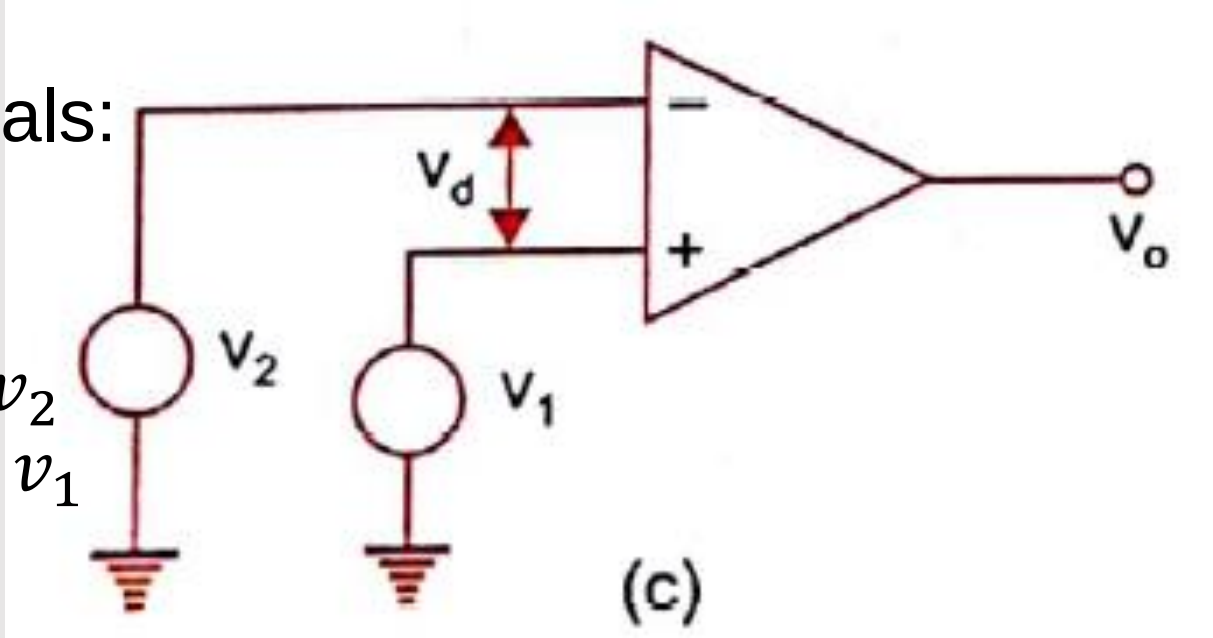

2. IDEAL Operational Amplifier

- IDEAL OP-AMP characteristics:
  Open loop voltage gain: $A_{OL} = \infty$
  Input impedance: $R_i = \infty$
  Output impedance: $R_0 = 0$
  Bandwidth $BW = \infty$
  Zero offset, $v_0 = 0$ when $v_1 = v_2 = 0$

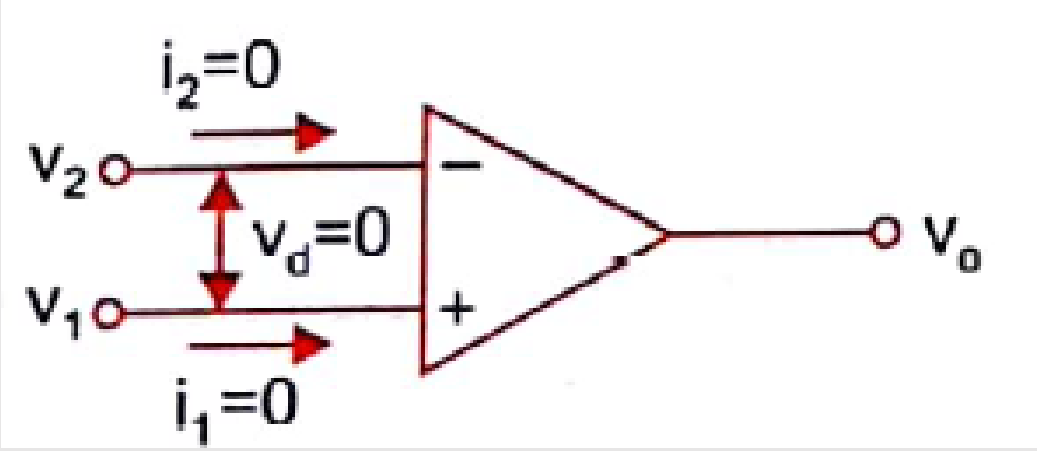

- Draws zero current from input $i_1 = i_2 = 0$
  (because of infinite impedance at input; no loading at previous stage)
- Since gain → ∞, $\mathrm{v_d} = v_1 - v_2 = 0$
  Voltage difference between inverting and non-inverting terminals is zero
- Output voltage is independent of current drawn from output (as $R_0 = 0$)
  Output can drive infinite devices.

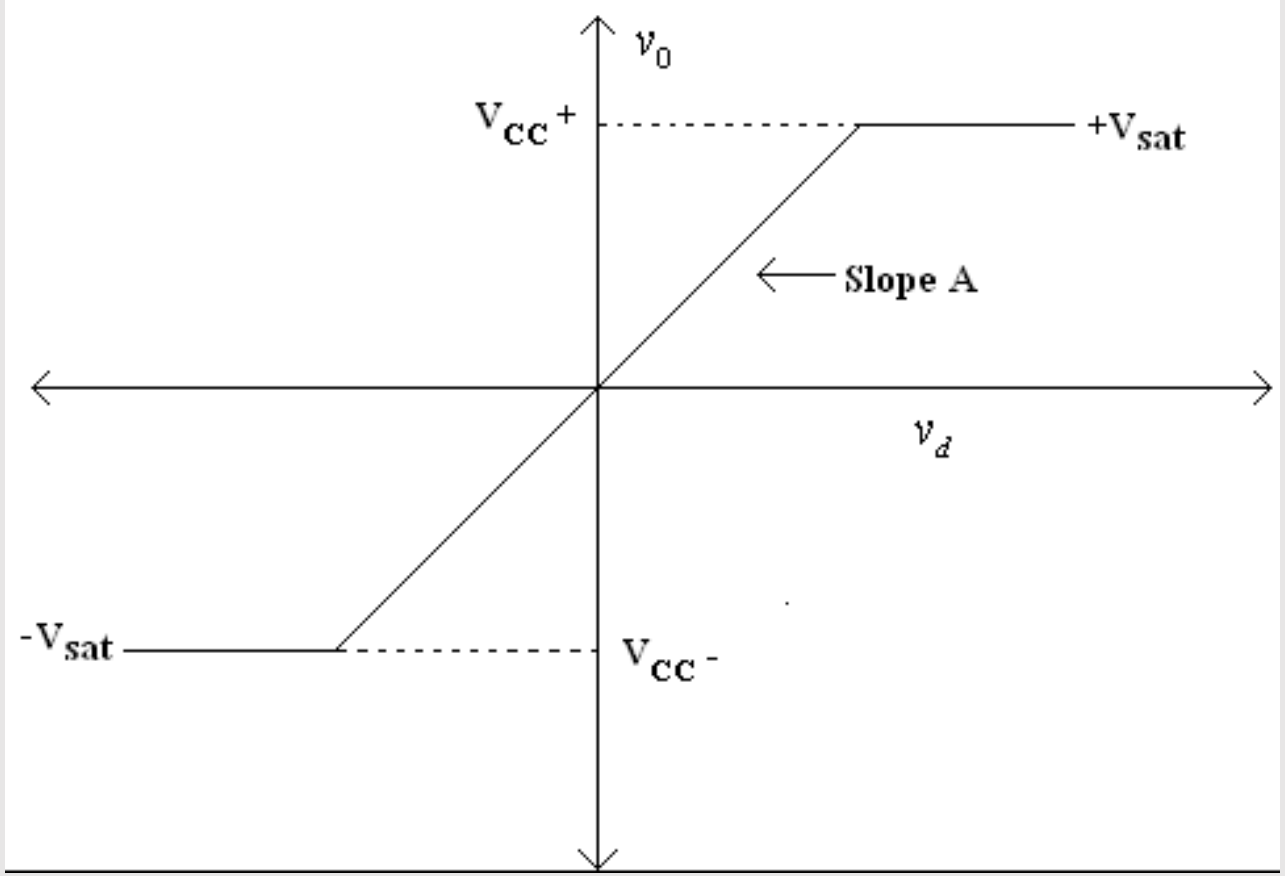
v_0
$V_{CC}+$
$+V_{sat}$
Slope A
v_d
$-V_{sat}$
$V_{CC}-$

Non-ideal OP-amp

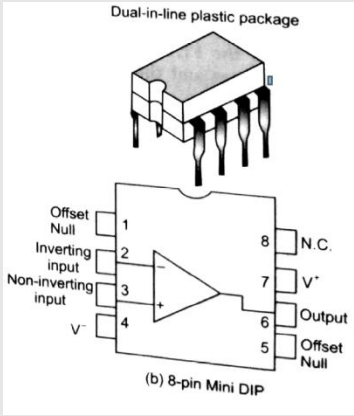

- Ideal properties can never be realized in practice.
- Ideal case – only for simplified mathematics involved in Op-amp ckts
- Physical amplifier is non-ideal
  $A_{OL} \neq \infty$; $R_i \neq \infty$; $R_0 \neq 0$.
  Op-amp is voltage controlled voltage source:
  $v_o = A_{OL} v_d$ (Thevenin's equivalent voltage source)
  with R_0 in series (Thevenin's resistance).
- $v_o = A_{OL} v_d$
  $= A_{OL}(v_1 - v_2)$
- Op-amp amplifies difference between inputs

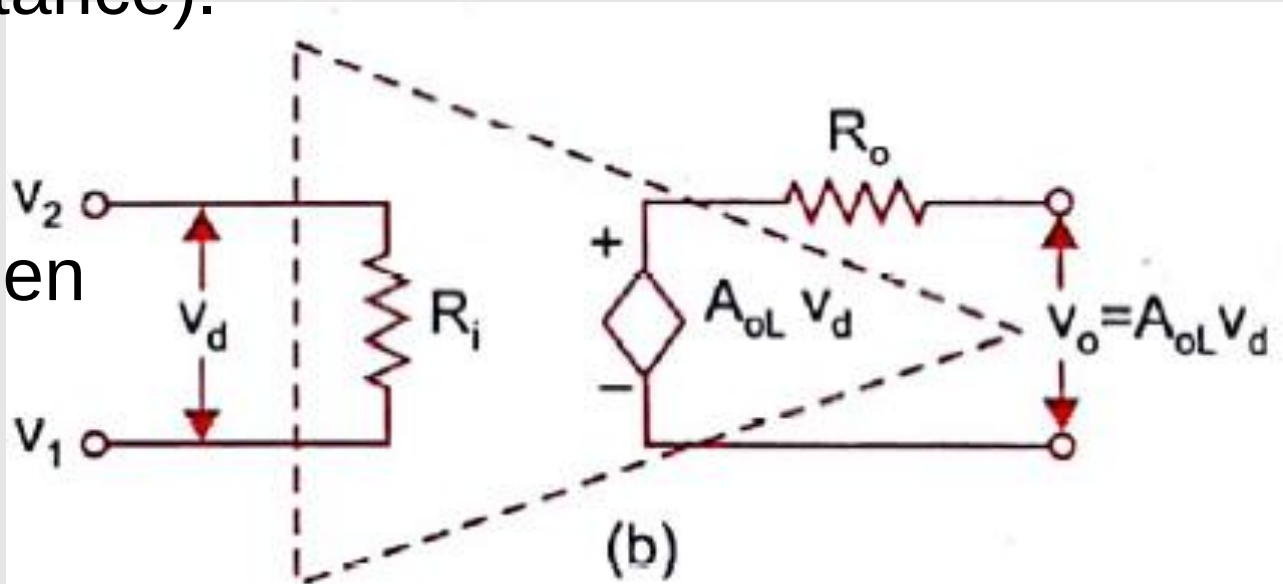

Equivalent Model

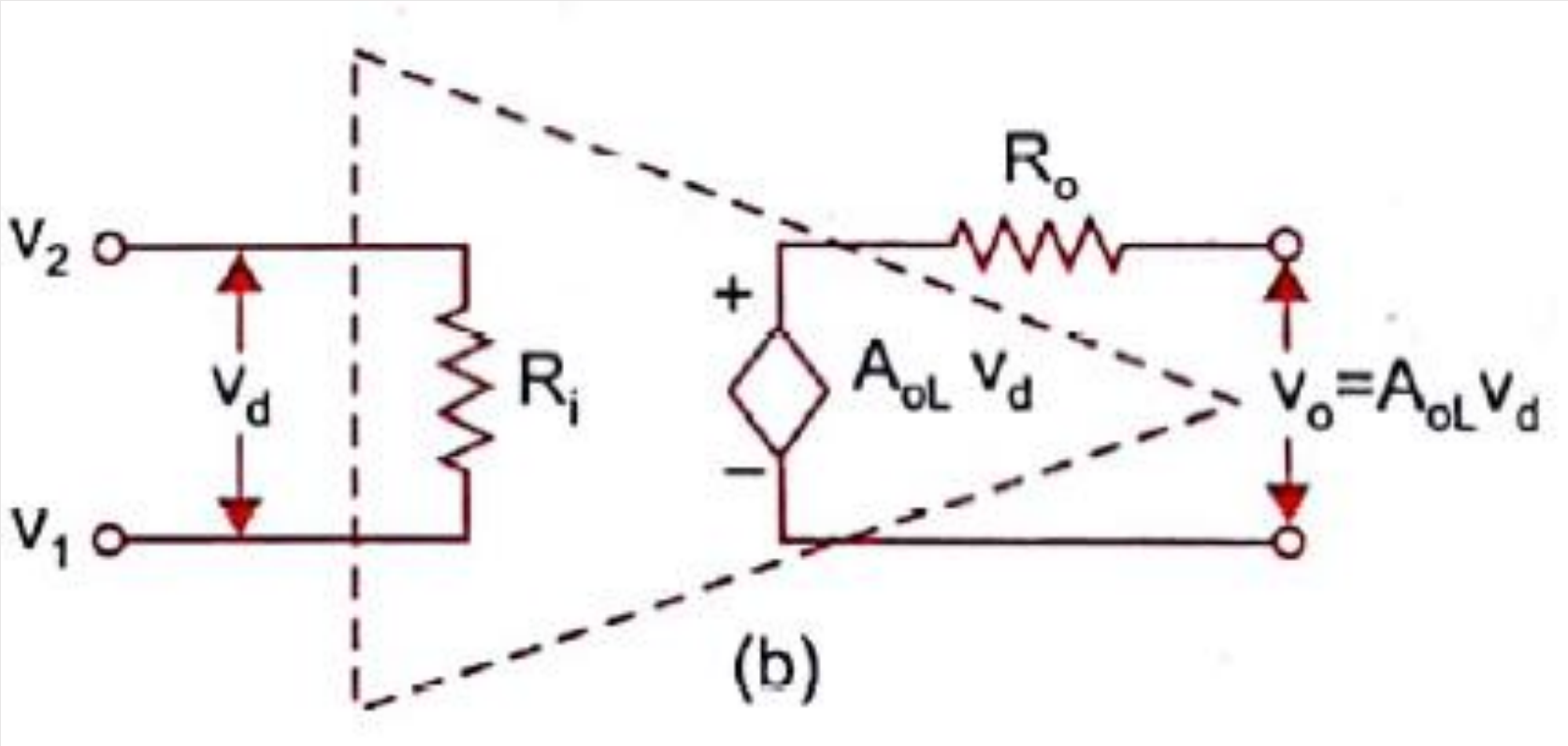

5. Feedback in Ideal OP-AMP

- **Use of OP-Amp is increased when negative feedback is given and output is not driven into saturation**
  Circuit will behave linearly (as per input)
- Two realistic simplified assumptions while understanding operation of the circuits:

  - Current drawn by either of input terminals (non-inverting and inverting) is negligible

  - Differential input voltage v_d between non-inverting and inverting input terminals is zero

IDEAL OP-AMP

Characteristics	Symbol	Ideal Values	Practical values
Open loop voltage gain	A_{OL}	∞	200000
Input resistance	R_n	∞	2 MΩ
Output resistance	R_0	0	75 Ω
Offset voltage	V_0	0	6 mV
Bandwidth	BW	∞	1 MHz
CMRR	ρ	∞	90 dB
Slew rate	S	∞	0.5 V/μs

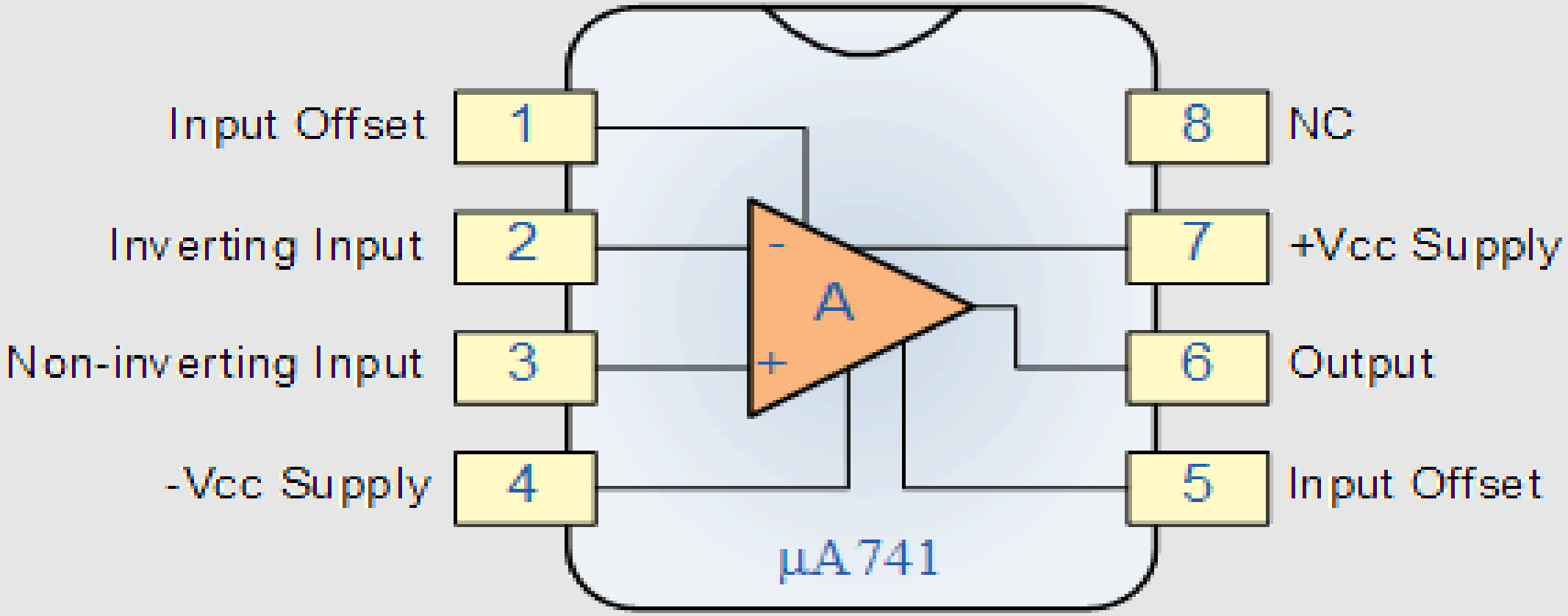
Input Offset
1
Inverting Input
2
Non-inverting Input
3
-Vcc Supply
4
8
NC
7
+Vcc Supply
6
Output
5
Input Offset
-
+
A
µA741

Closed Loop op-amp Configurations

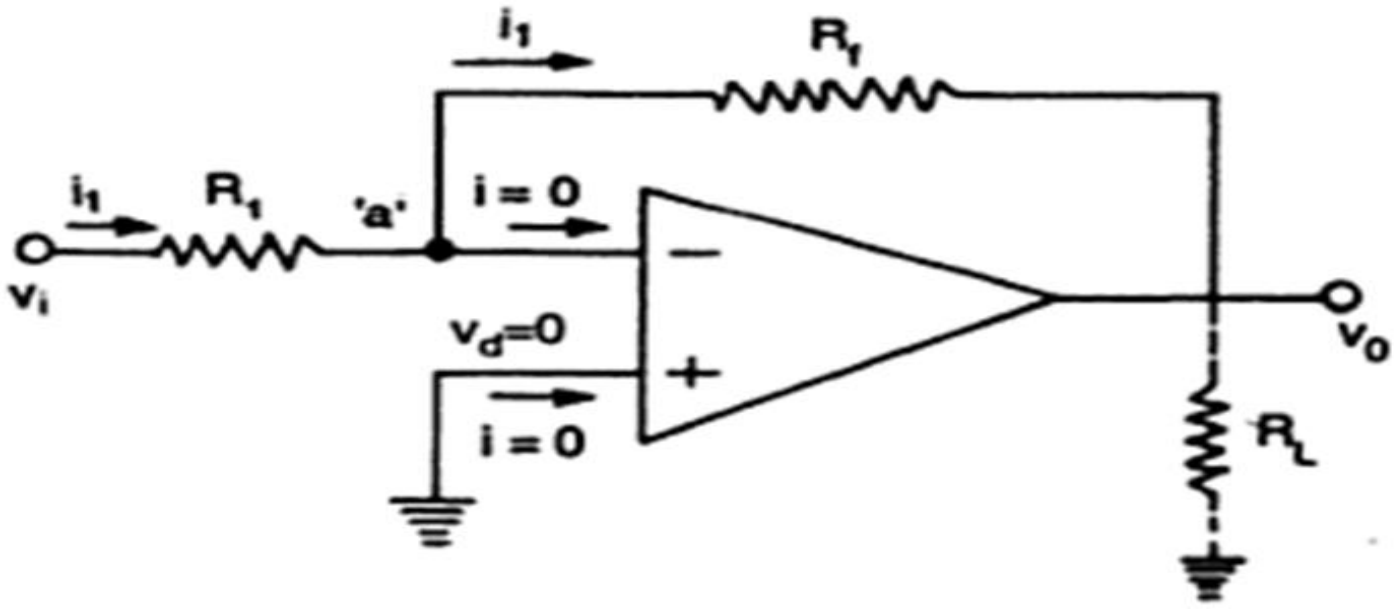

Inverting amplifier

Inverting Amplifier

A

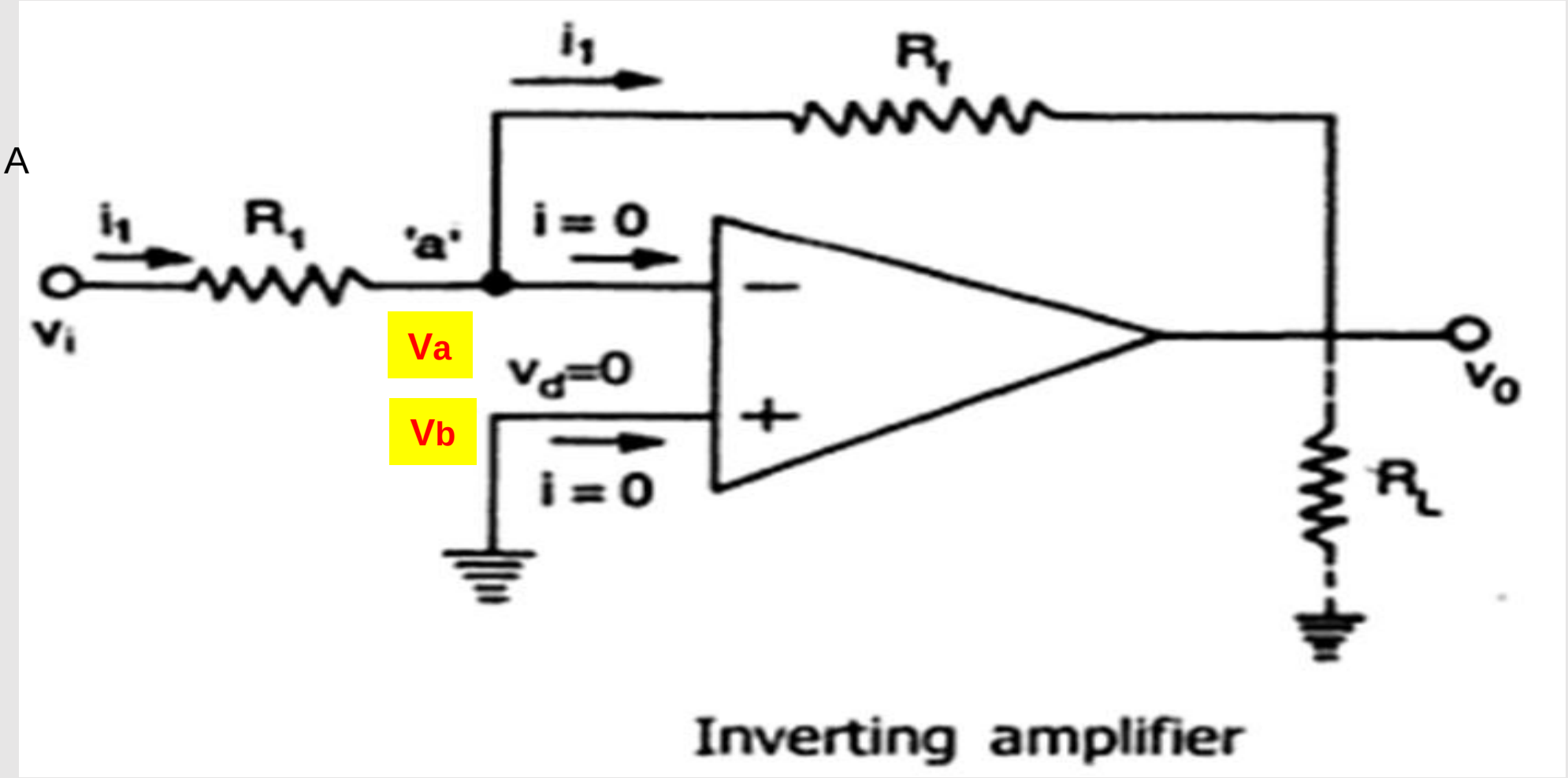

At input End

$$i_1 = \frac{V_{in} - V_a}{R_1} = \frac{V_{in}}{R_1}$$

A

At output End

$$i_1 = \frac{V_a - V_0}{R_f} = \frac{-V_o}{R_f}$$

$$\frac{-V_o}{R_f} = \frac{V_{in}}{R_1}$$

Output Voltage

$$V_o = -\frac{R_f}{R_1} V_{in}$$

Gain:

$$A = \frac{V_o}{V_{in}} = -\frac{R_f}{R_1}$$

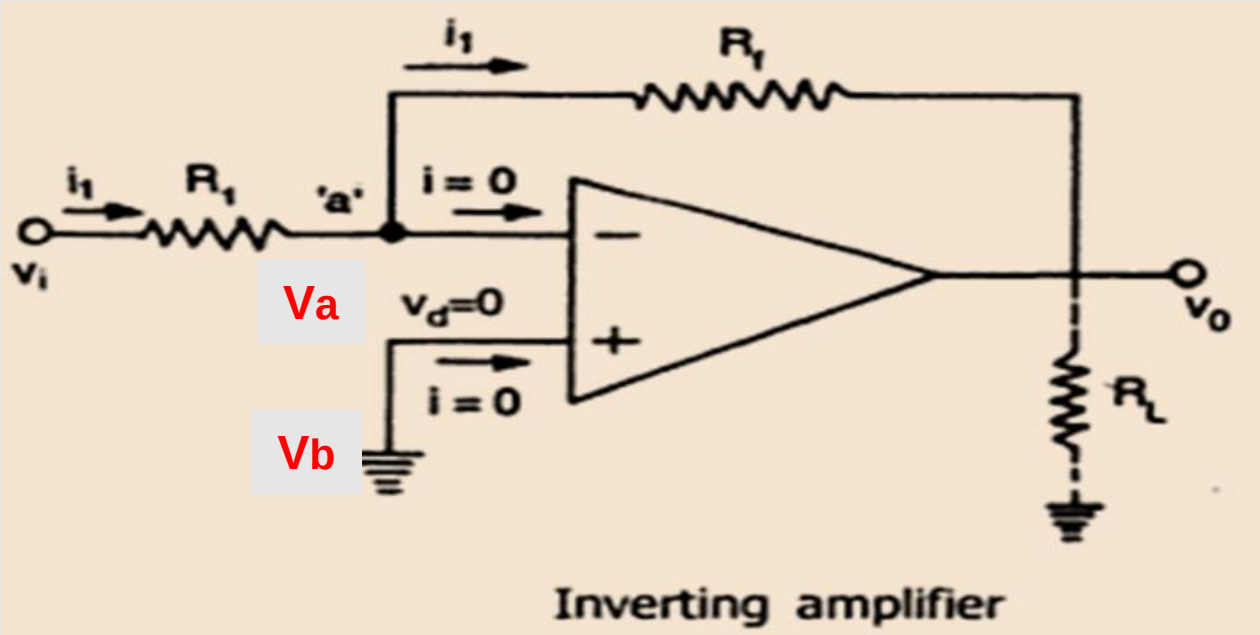

Problem 1: Design a gain of -10 and input resistance equal to $10K\Omega$ using op-amp.

- Gain of amplifier is negative : $A_{CL} = -10$
  Hence the circuit is inverting amplifier
- $R_1 = 10k\Omega$
- We know that for inverting amplifier: $A_{CL} = -R_f/R_1$
- Hence: $-10 = -R_f/10k$: $R_f = 100k\Omega$ (feedback resistor)

Problem 2: For the given circuit, if $v_i = 1V$; calculate i_1, v_o, i_L and Total current i_o into output pin

- $i_1 = \frac{(v_i - V^-)}{R_1} = \frac{1-0}{10k} = 0.1mA$
- $v_0 = -\frac{R_f}{R_1} v_i = -\frac{100k}{10k} 1 = -10V$
- $i_L = \frac{v_o}{R_L} = -\frac{10}{25k} = 0.4mA$

Apply KCL at output:

$i_1 + i_L = i_o$

$0.1m + 0.4m = i_o$

- $i_0 = 0.5m$ (Practical op-amp)

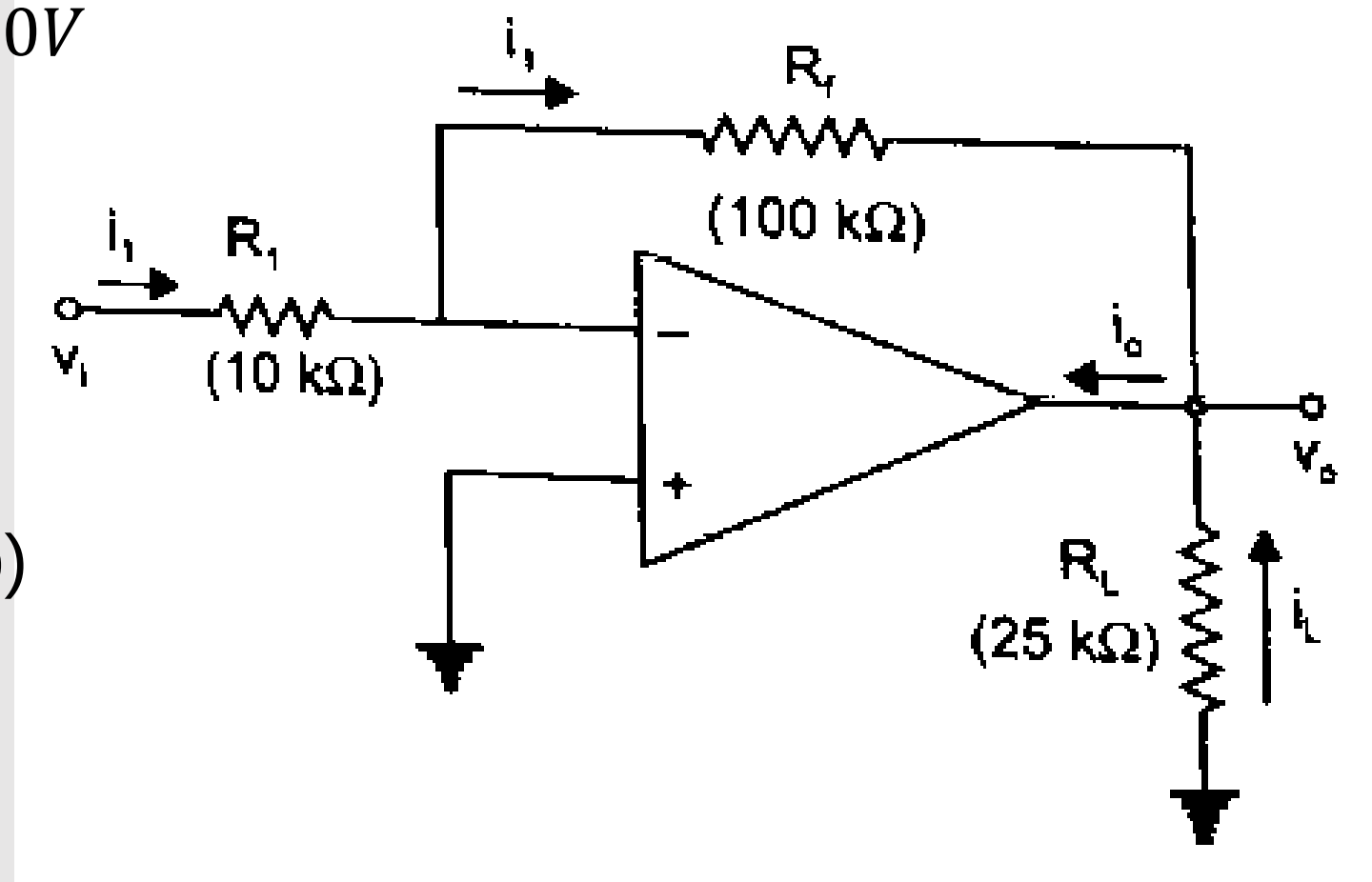

Practical Inverting Amplifier

Input Resistance less than ∞, hence op-amp input current is finite

Open loop voltage A_{OL} *is* less than ∞

$R_o = 0$

$R_F = Feedback$ from output to Input

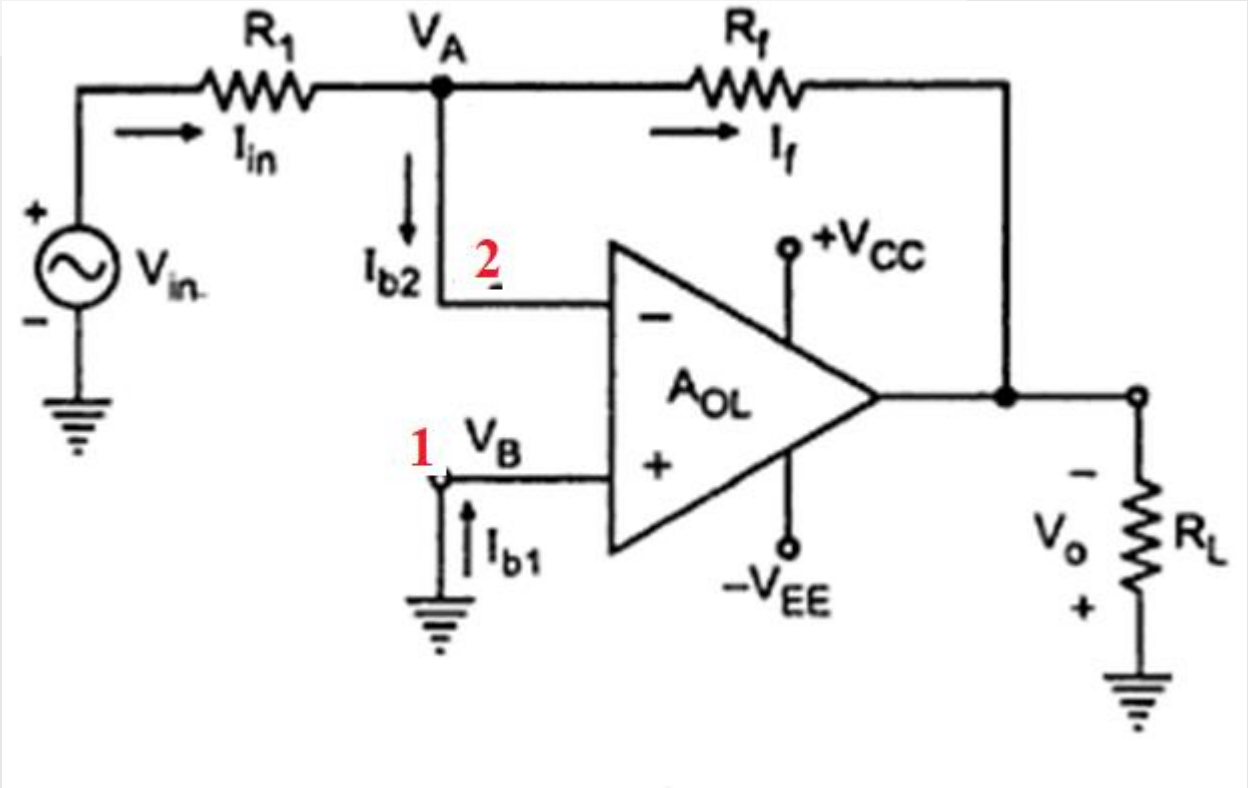

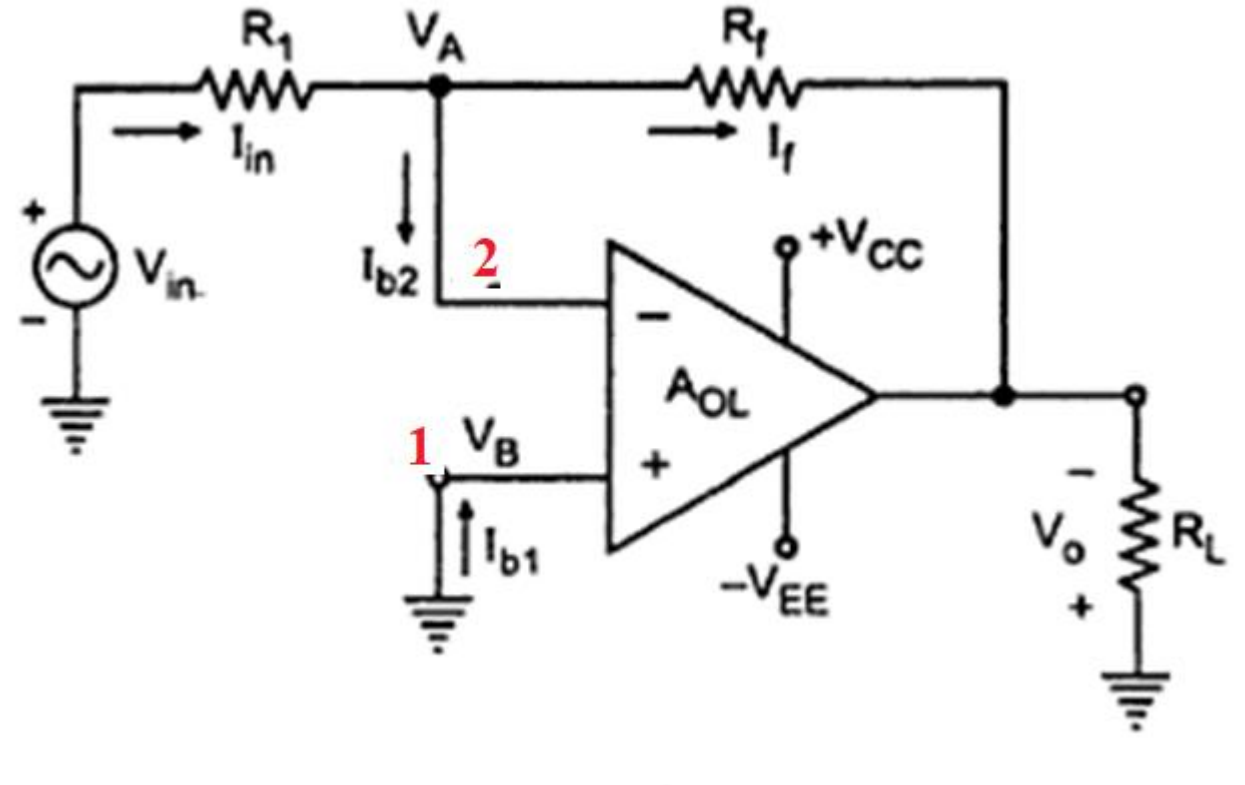

Closed Loop Gain (A_{CL})

Apply KCL at node 1

$$I_{in} = I_{B2} + I_f$$

$$I_{in} \simeq I_f$$

$$\frac{V_{in} - V_A}{R_1} = \frac{V_A - V_0}{R_f}$$

$$Vo = A_{OL}(V_d) = A_{OL}(V_1 - V_2)$$

as grounded $V_1 = 0, and\ V_2 = V_A$

$$Vo = A_{OL}(V_d) = A_{OL}(0 - V_2) = -A_{OL}V_A$$

Reference

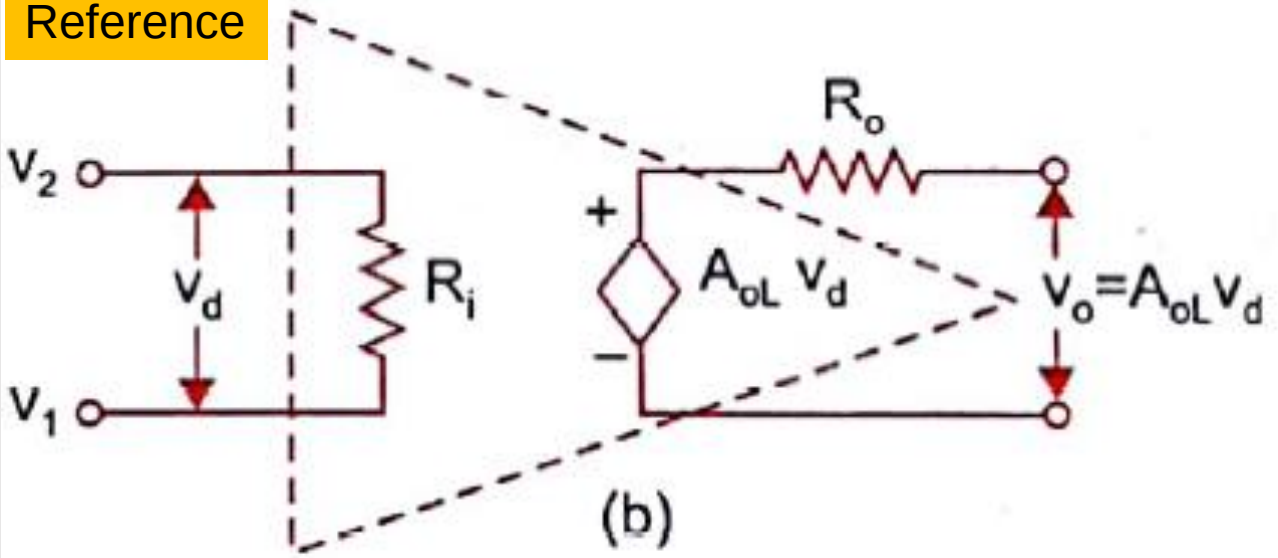

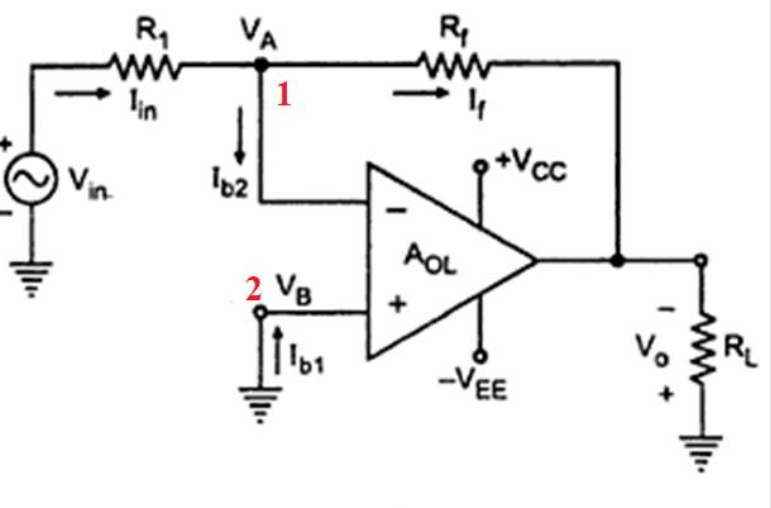

$$Vo = A_{OL}(V_d) = A_{OL}(0 - V_2) = -A_{OL}V_A)$$

$$V_A = -\frac{Vo}{A_{OL}}$$

$$\frac{V_{in} - V_A}{R_1} = \frac{V_A - V_0}{R_f}$$

$$\frac{V_{in} - \left(-\frac{Vo}{A_{OL}}\right)}{R_1} = \frac{\left(-\frac{Vo}{A_{OL}}\right) - V_O}{R_f}$$

$$R_f\left(V_{in} + \frac{Vo}{A_{OL}}\right) = R_1\left(-\frac{Vo}{A_{OL}}\right) - V_O$$

$$V_{in}R_f = -Vo\left(\frac{R_1}{A_{OL}} + R_1 + \frac{R_f}{A_{OL}}\right)$$

$$A_F = \frac{V_0}{V_{in}} = -\frac{A_{OL}R_f}{R_1 + R_f + R_1A_{OL}}$$

Input Resistance

$$R_{if} = \frac{-v_d}{i}$$

writing KVL,

$$v_d + i(R_f + R_o) + A_{OL} v_d = 0$$

$$\cancel{v_d + R_{if} v_d (R_f + R_o) + A_{OL} R_{if}} = 0$$

$$R_{if} =$$

$$-R_{if} i + i(R_f + R_o) + (-A_{OL} R_{if} i) = 0$$

$$-R_{if} + (R_f + R_o) + -A_{OL} R_{if} = 0$$

$$-R_{if}(1 + A_{OL}) + R_f + R_o = 0$$

$$R_{if} = \frac{R_o + R_f}{1 + A_{OL}}$$

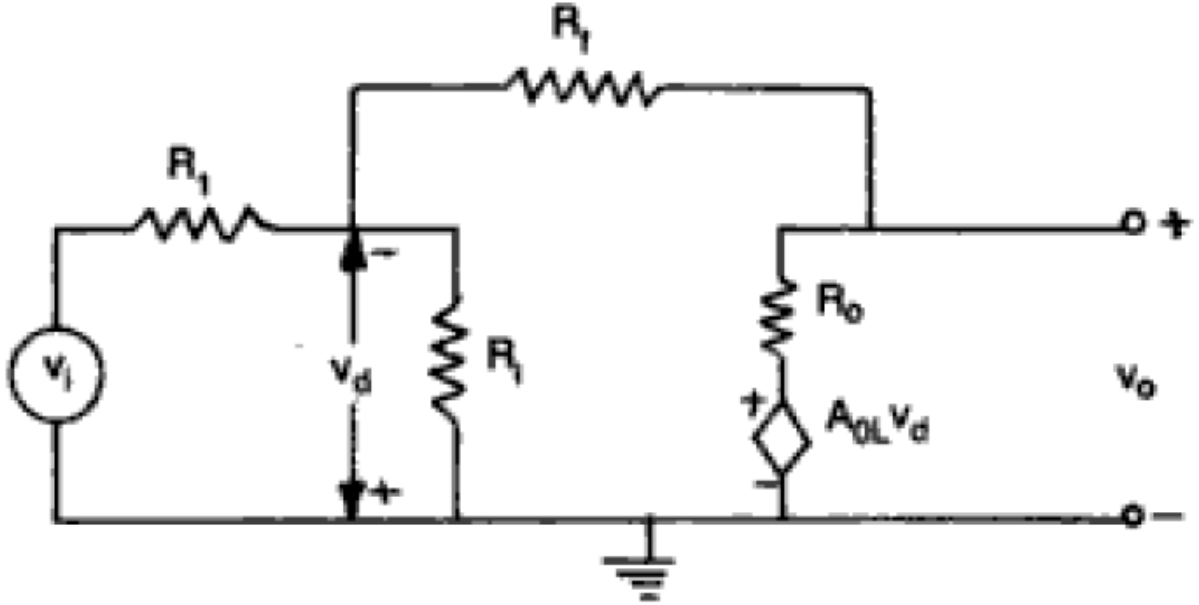

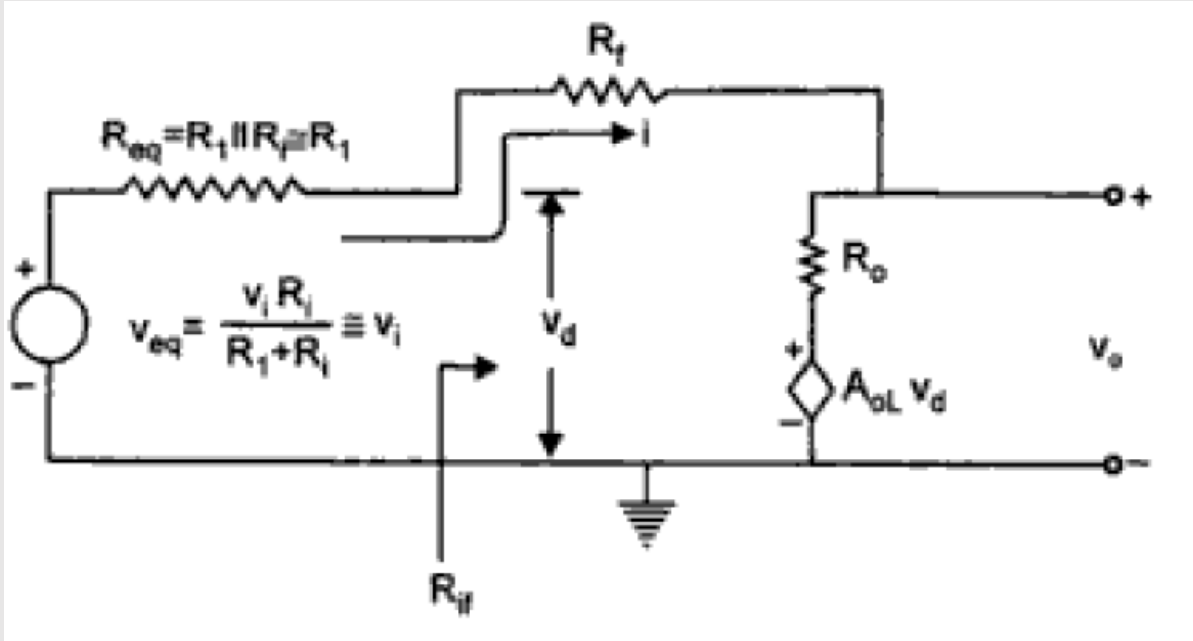

Non Inverting Amplifier

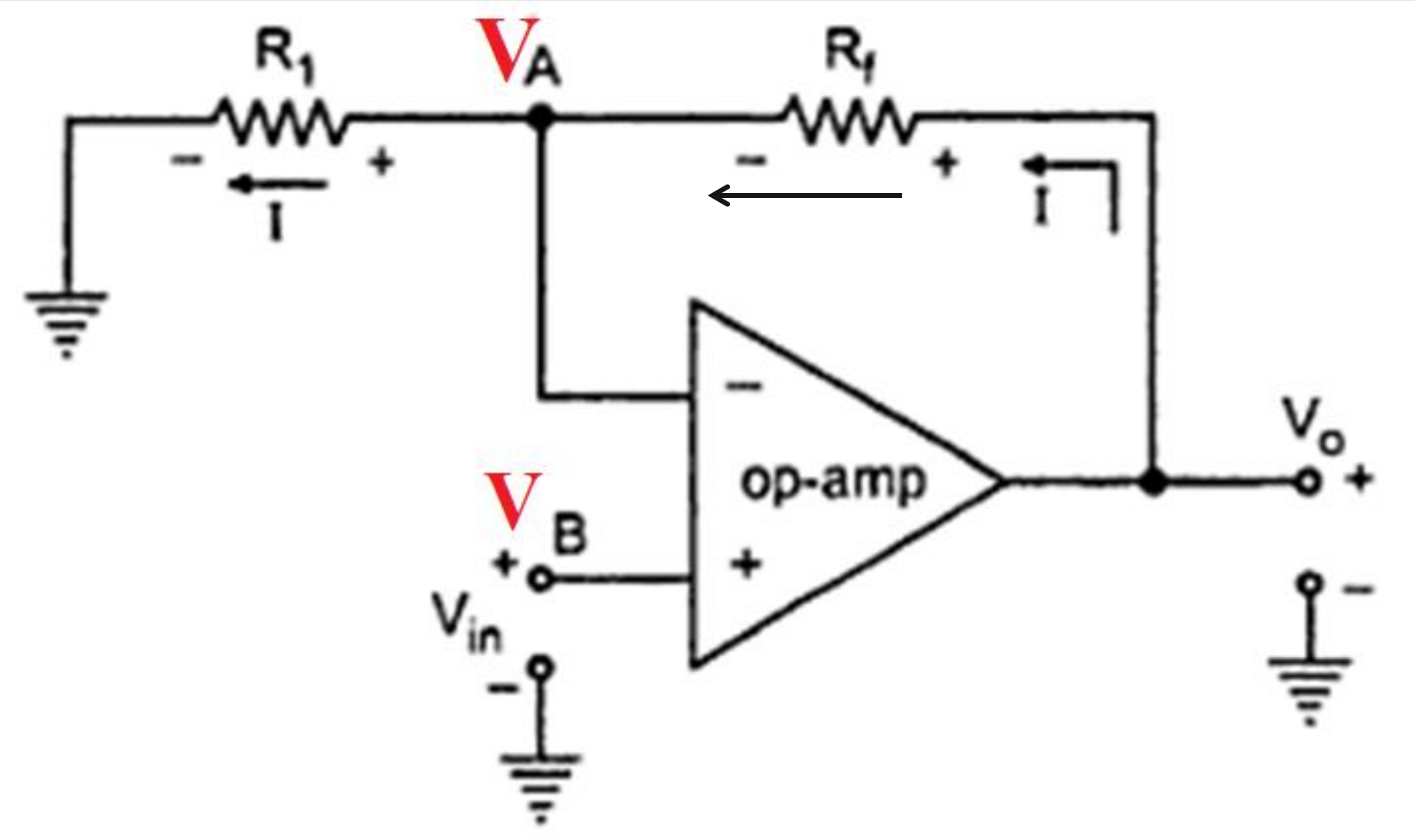

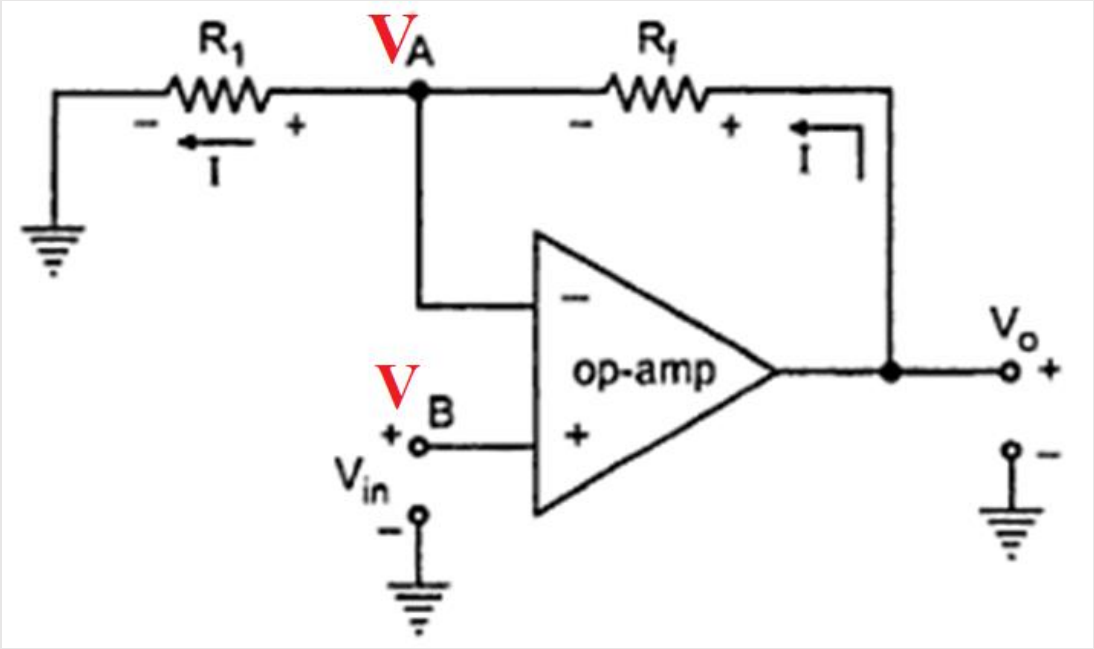

$$V_A = V_B$$

$$\because V_B = V_{in}; V_A = V_{in}$$

From the output side:

$$I = \frac{V_O - V_A}{R_f} = \frac{V_O - V_{in}}{R_f}$$

At Inverting Terminal

$$I = \frac{V_A - 0}{R_1} = \frac{V_{in}}{R_1}$$

Entire current passes through R1 as input current of op-amp is zero

Equating Equations

$$\frac{V_O - V_{in}}{R_f} = \frac{V_{in}}{R_1}$$

$$\frac{V_0}{R_f} = \frac{V_{in}}{R_1} + \frac{V_{in}}{R_f}$$

$$\frac{V_0}{R_f} = V_{in}\left(\frac{1}{R_1} + \frac{1}{R_f}\right) = V_{in}\left(\frac{R_f + R_1}{R_1 R_f}\right)$$

$$\frac{V_0}{V_{in}} = \frac{\left(R_f + R_1\right)R_f}{R_1 R_f}$$

$$\frac{V_0}{V_{in}} = \frac{\left(R_f + R_1\right)R_f}{R_1 R_f}$$

$$V_0 = V_{in}\frac{\left(R_f + R_1\right)}{R_1} = V_{in}\left(1 + \frac{R_f}{R_1}\right)$$

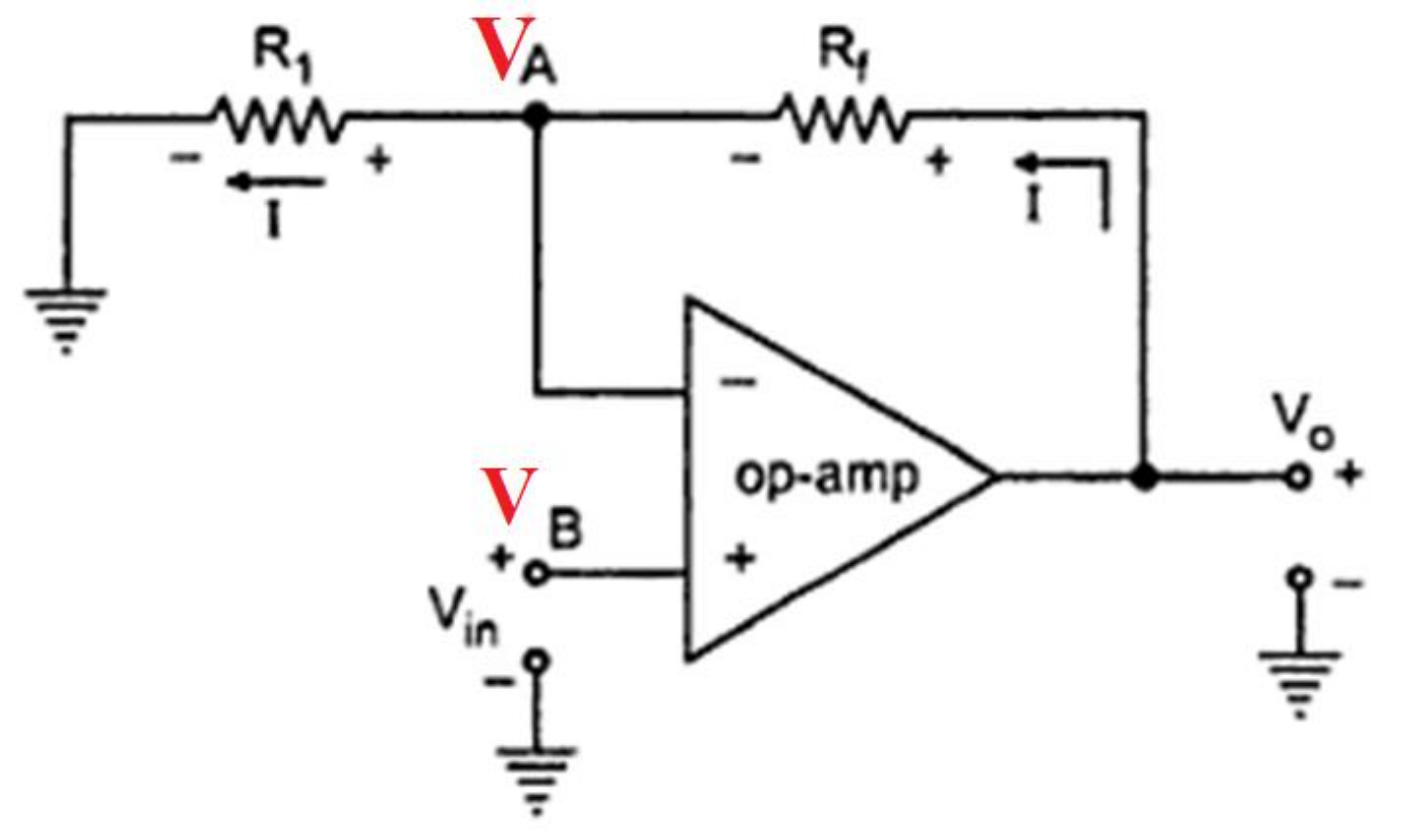

Practical Non Inverting Amplifier

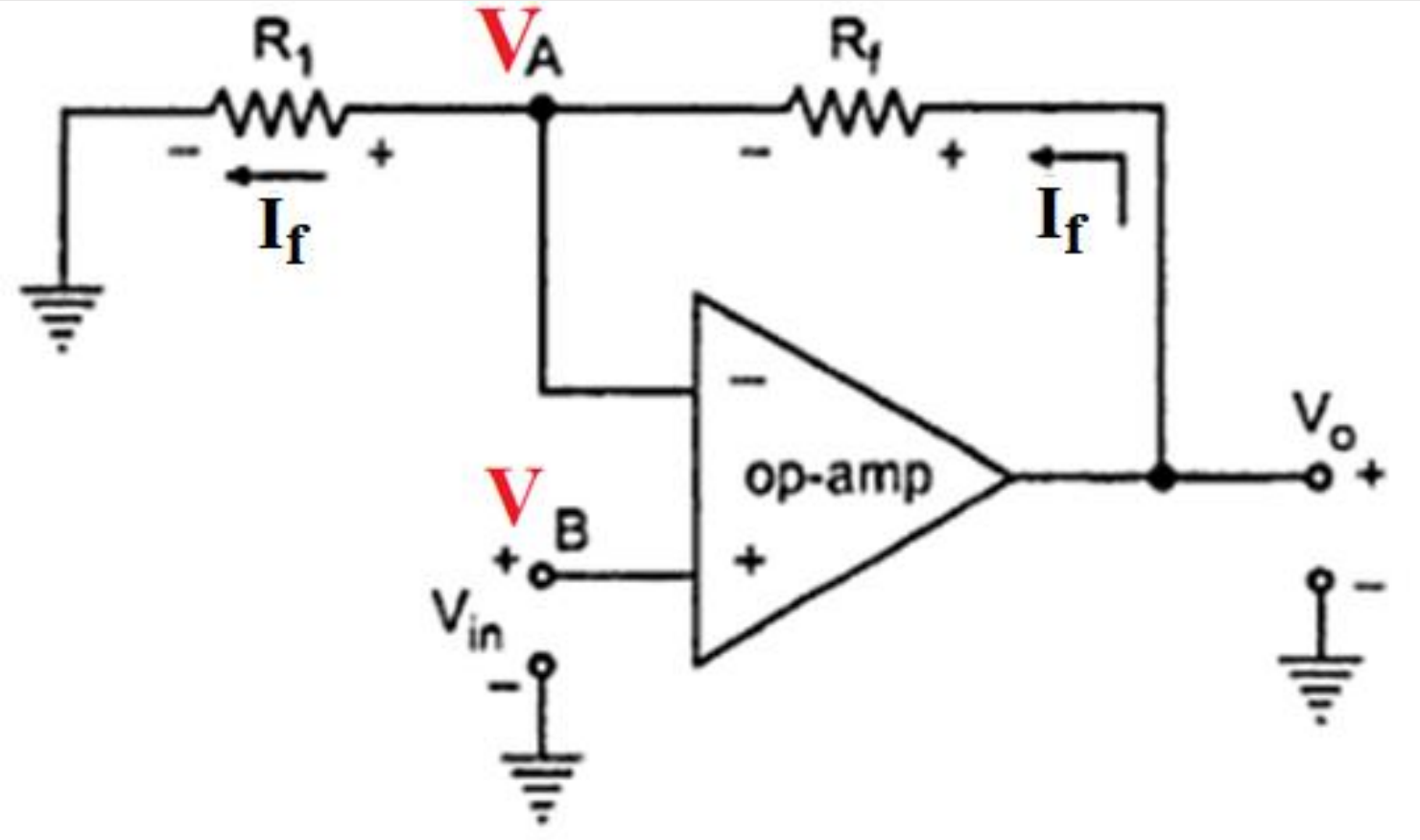

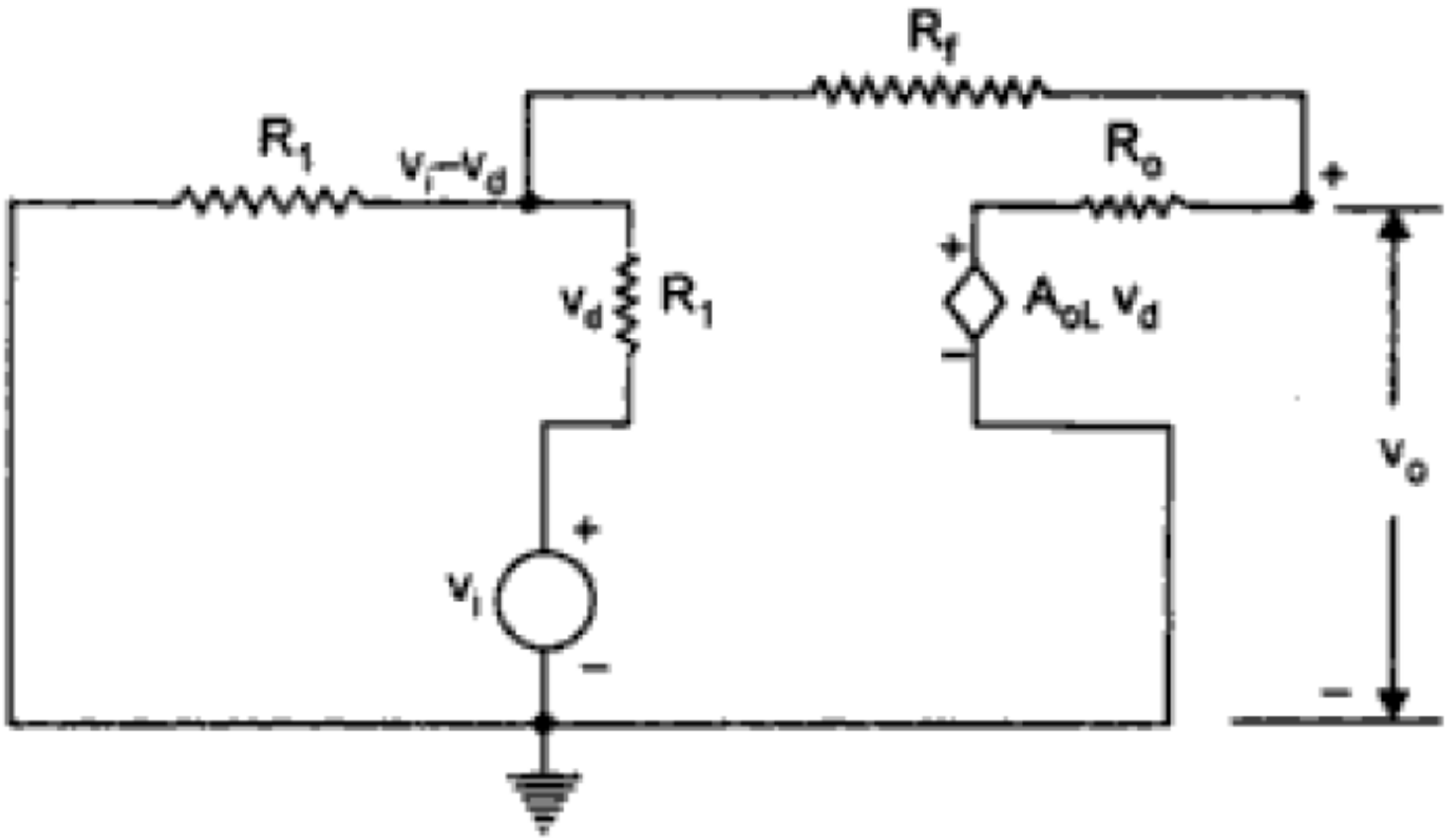
R_f
R_1
$v_i - v_d$
R_o
+
v_d
R_1
+
$A_{OL}\, v_d$
−
v_o
+
v_i
−
−

$An\ inverting\ amplifer\ is\ shown\ with\ R_1 = 20k\Omega\ and\ R_f = 100\text{k}\Omega$
A load of 10k is connected to the output with input voltage of 0.7V.

- Calculate I_1,V_O.I_L,Total current I_o

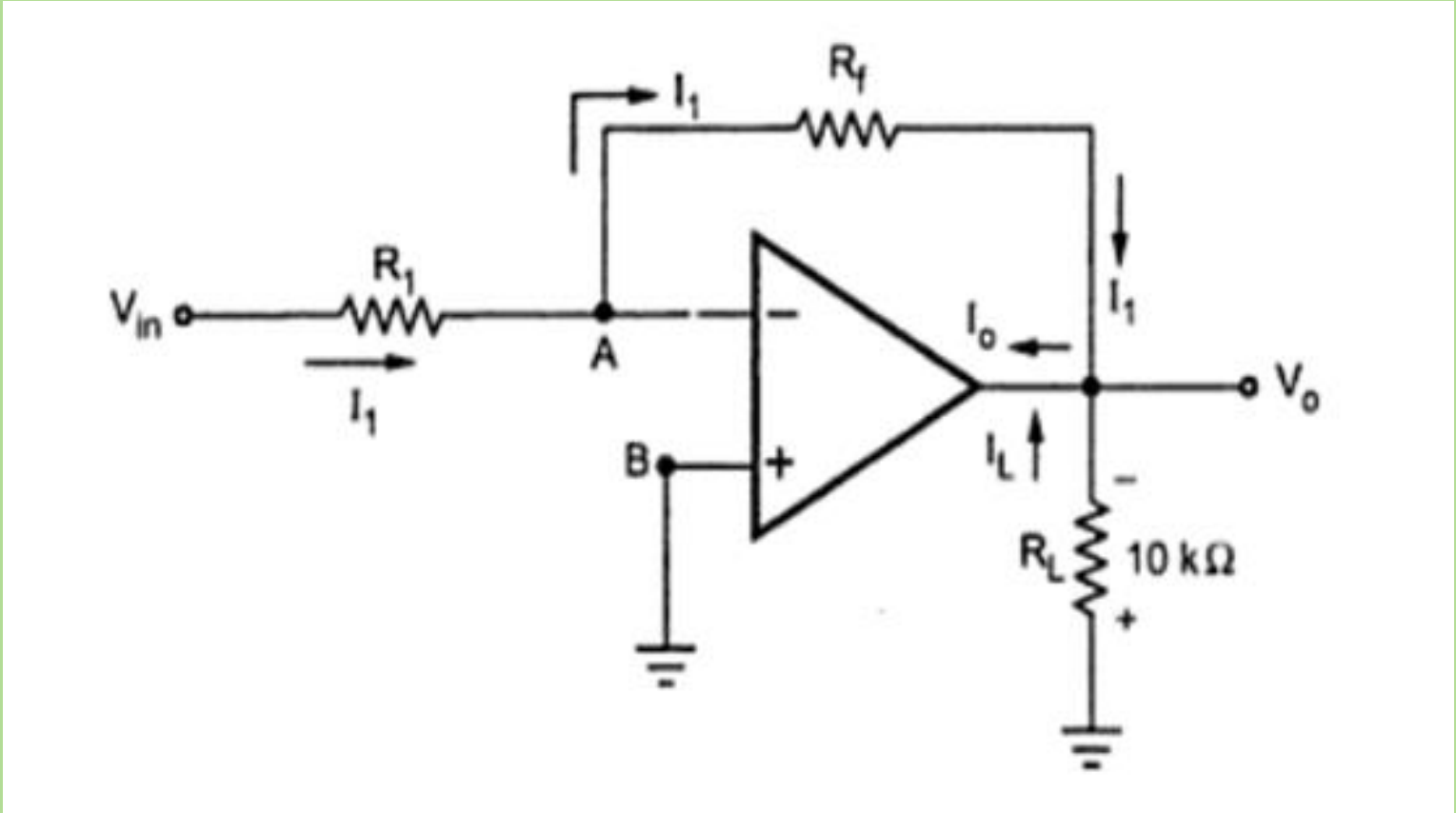

From the given circuit, node A is at virtual ground hence $V_B = V_A = 0$.

$$I_1 = \frac{V_{in} - V_A}{R_1} = \frac{V_{in}}{R_1} = \frac{0.7}{20 \times 10^3} = 35\ \mu A$$

$$V_o = V_{in} A_{CL} = -\frac{R_f}{R_1} \times V_{in} = -\frac{100}{20} \times 0.7 = -3.5\ V$$

$$I_L = \frac{V_o}{R_L} = \frac{-3.5}{10 \times 10^3} = -0.35\ mA$$

The negative sign indicates that it flows from ground towards output terminal.

As op-amp input current is zero, I_1 flows through R_f as well. Applying KCL at output node,

$$I_o = I_L + I_1 = 0.35 \times 10^{-3} + 35 \times 10^{-6}$$

$$= \mathbf{0.385\ mA} \text{ into the op-amp output}$$

Problem 2: For the given circuit: $R_1 = 5k\Omega; R_f = 20k\Omega$, $v_i = 1V$. Load resistor of $5k\Omega$ is connected at output. Calculate $v_0, A_{CL}, \mathrm{i_L}$(load current), i_o $o$utput current indicating proper direction of flow

- (i) $v_o = \left(1 + R_f/R_1\right) = (1 + 20k/5k) = 5V$
- (ii) $A_{CL} = \frac{v_o}{v_i} = \frac{5}{1} = 5$
- (iii) $i_L = \frac{v_o}{R_L} = \frac{5V}{5k\Omega} = 1mA$
- (iv) $i_1 = \frac{v_i}{R_1} = \frac{v_o - v_i}{R_f} = 0.2mA$
- (v) current into the OpAmp = $i_1 + i_L$
- $= 1m + 0.2m = 1.2mA$
- Current flows outwards to output from Opamp output junction

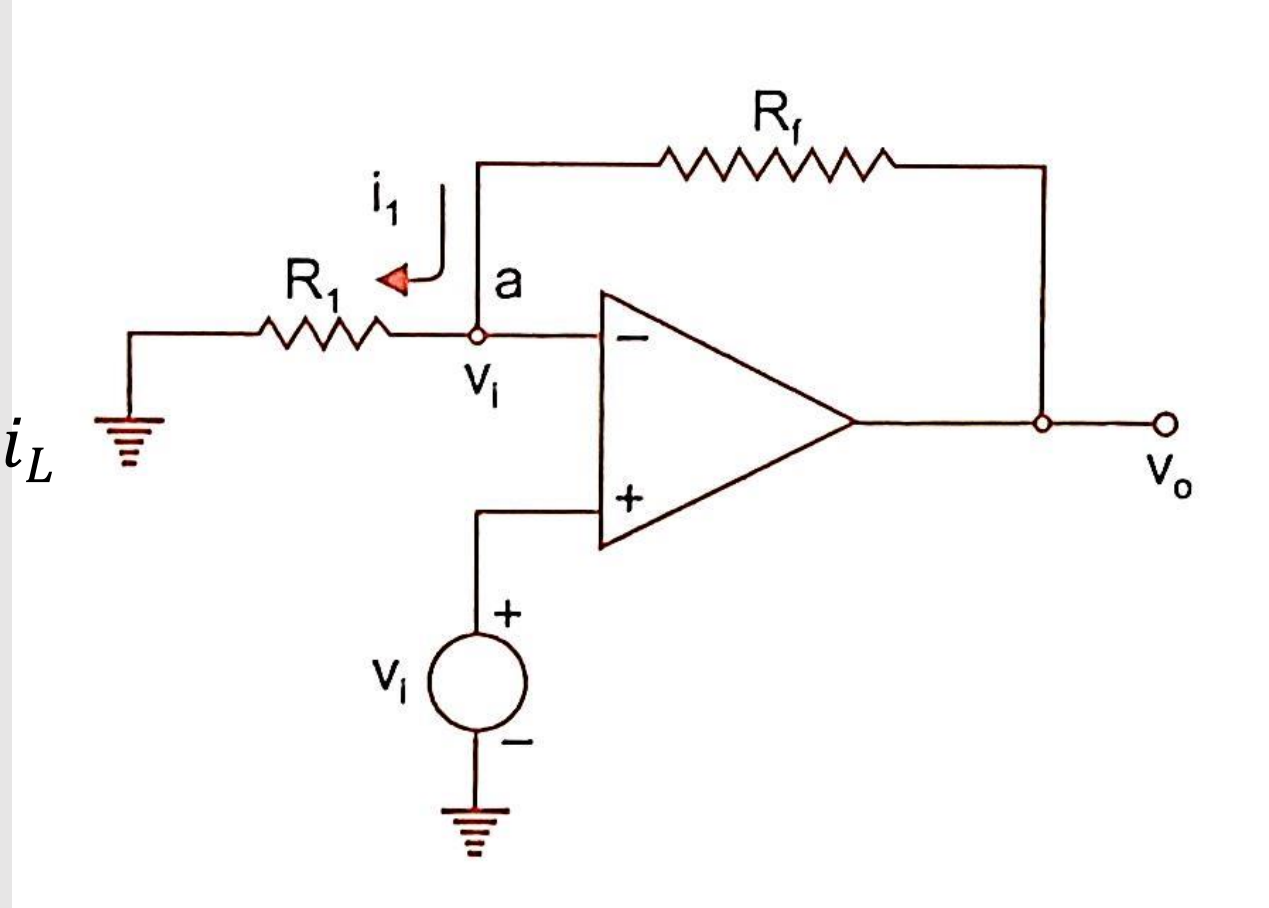

Problem 3: Calculate V_0 if $V_{in} = 1V$

- Circuit is non inverting
- $V_A = \frac{1k}{1k+1k} 1V = 0.5V$
- Output voltage: $V_o = \left(1 + R_f/R_1\right)V_A$

$$= \left(1 + \frac{50k}{10k}\right) 0.5V = 3V$$

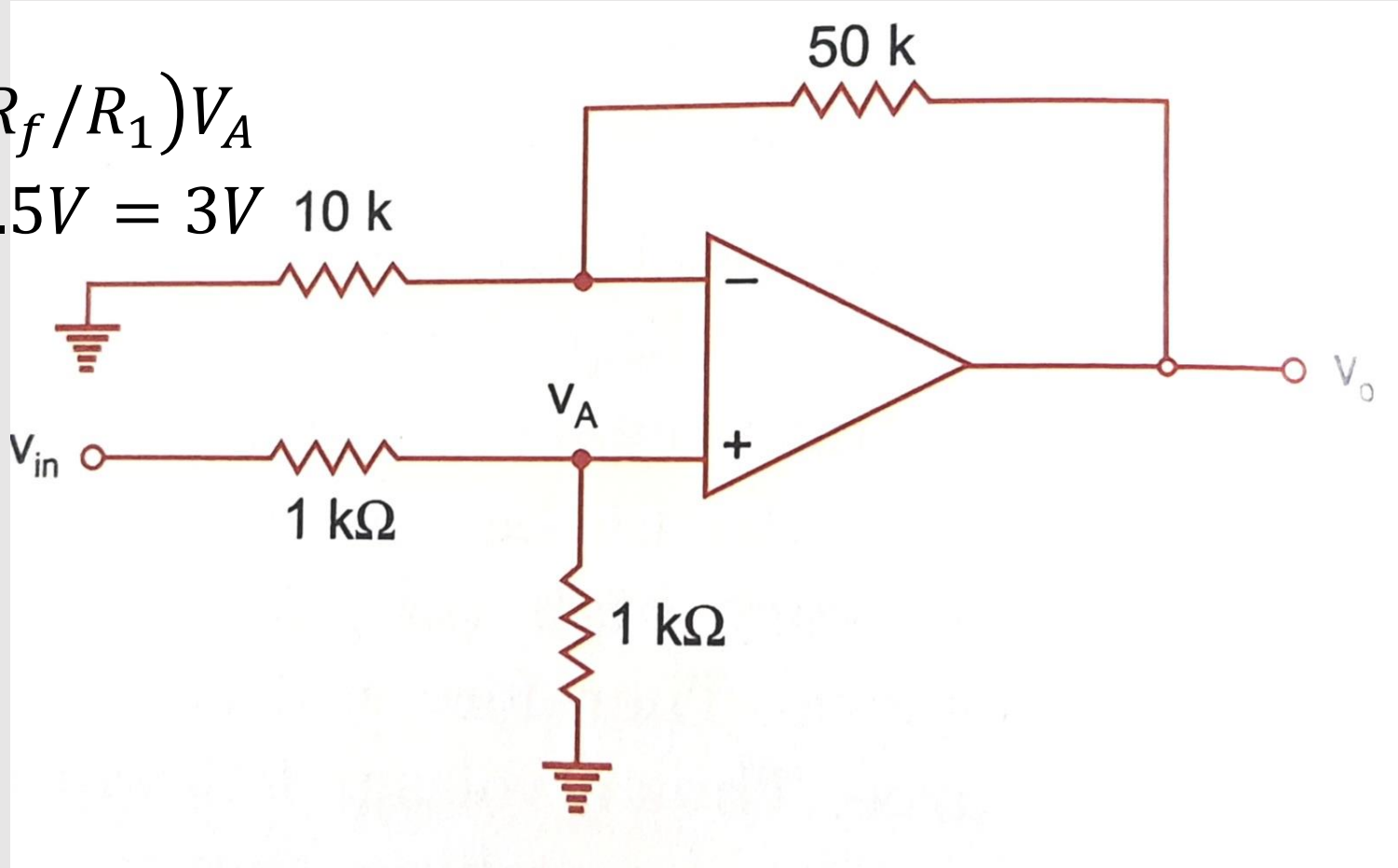

DC Characteristics

- **An ideal op-amp draws no current from the source and its also response is also independent of temperature.**

Real op-amp :

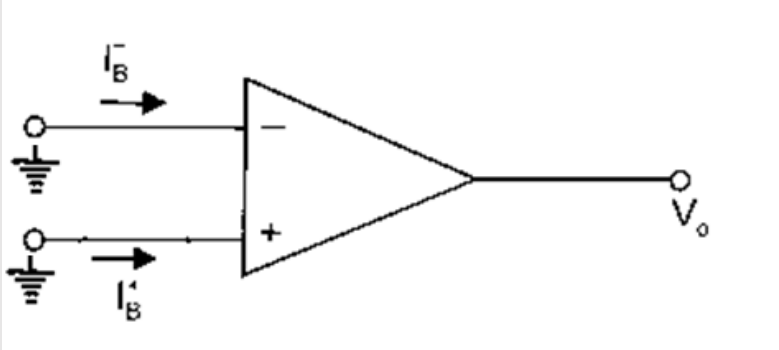

- Current is taken from the source into the op-amp inputs.
- Some DC voltage at the output even with both the inputs are grounded
- Under ac conditions the characteristics of an op-amp are frequency dependent
- Two inputs respond differently to current and voltage due to mismatch in transistors
- Operation will shifts with temperature.

Source:Linear Integrated Circuits,D.ROY CHOUDHURY et.al.

Non ideal characteristics

Add error components to the dc output Voltage.

1. Input Bias Current
2. Input off set Current
3. Input offset Voltage
4. Thermal drift

Source:Linear Integrated Circuits,D.ROY CHOUDHURY et.al.

Input Bias Current

Ideal op-amp: No current

Practical op-amp: **do conduct the small value of dc current to bias the input transistors**

Both –Transistors-Identical: $I_B^- \text{ and } I_B^+$ are not exactly equal due to internal imbalances between the inputs.

Manufactures: Bias current (I_B) as the average values of the base current entering the terminals of an op-amp.

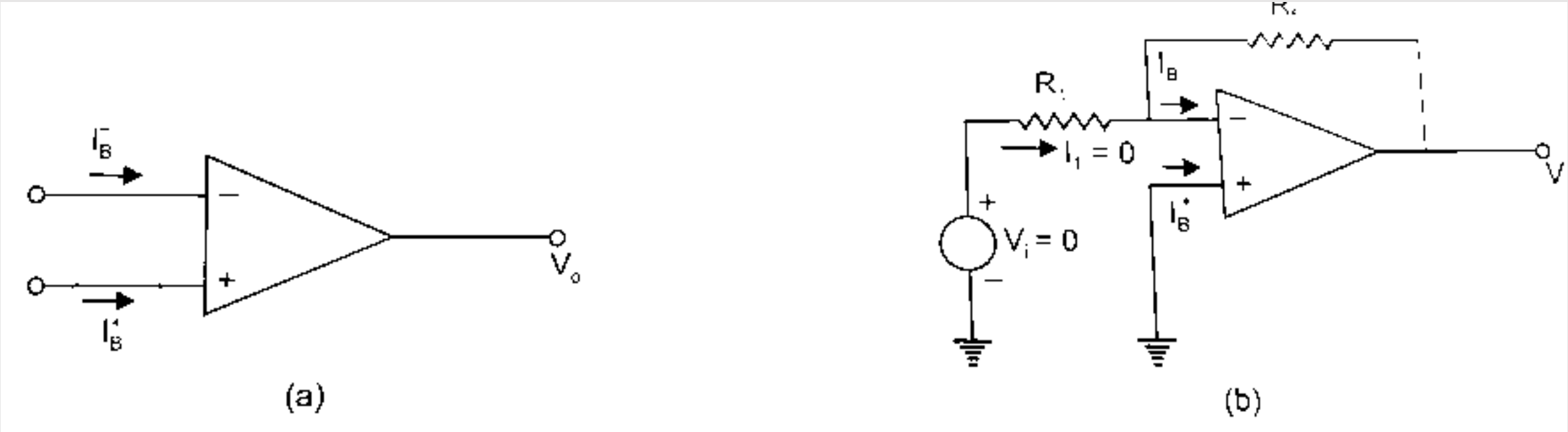

$$I_B = \frac{I_B^- + I_B^+}{2}$$

$If\ \ V_i = 0, V_0 = 0$ But we get off set by $V_0 = I_B^- R_f$

Source:Linear Integrated Circuits,D.ROY CHOUDHURY et.al.

To avoid this add compensation resistor

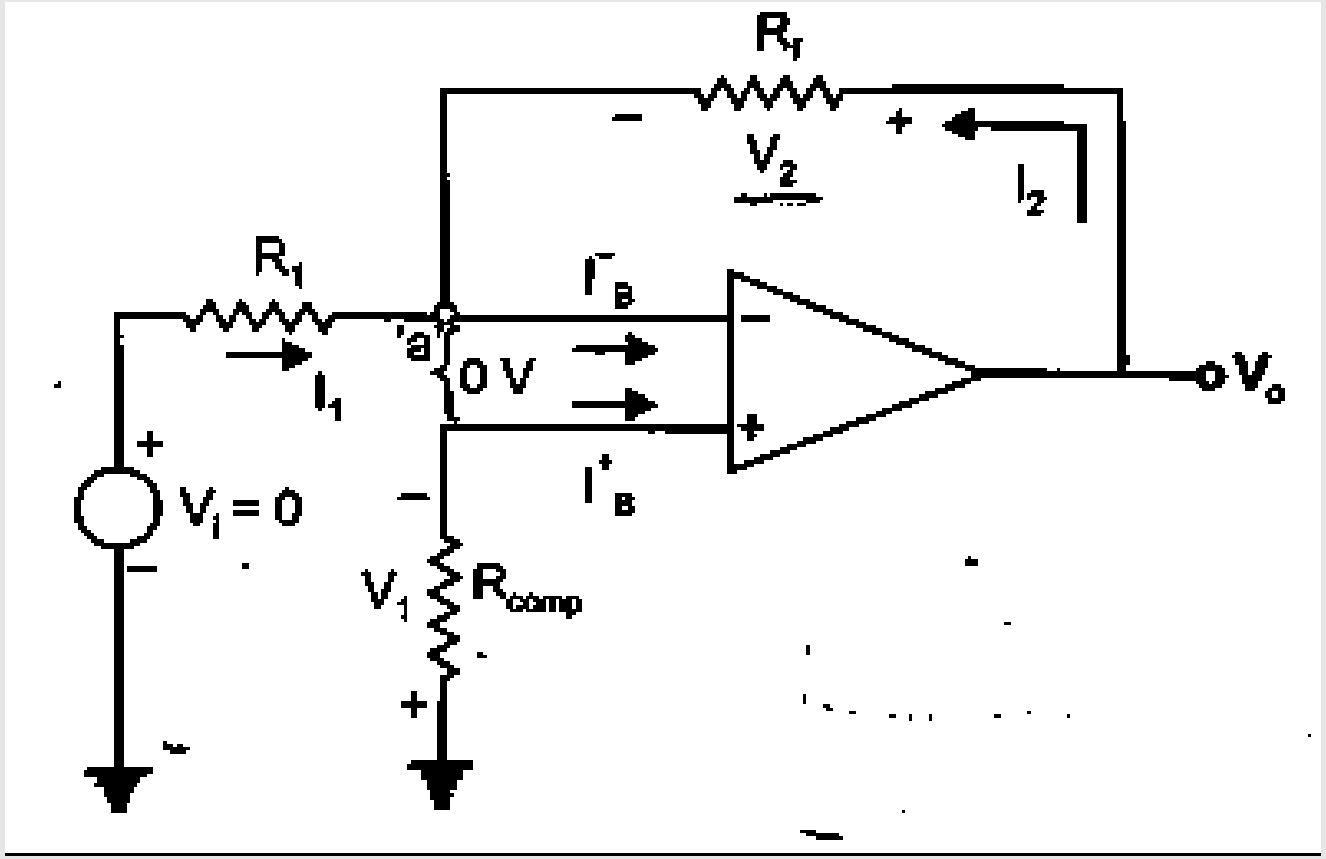

R_{comp} between noninverting input terminal and ground

Develop the voltage V_1 across it

V_2 can be cancelled with V_1 and the output V_0 will be zero: Choosing proper value

Apply KVL

$$-V_1 + 0 + V_2 - V_0 = 0$$

$$V_0 = V_2 - V_1$$

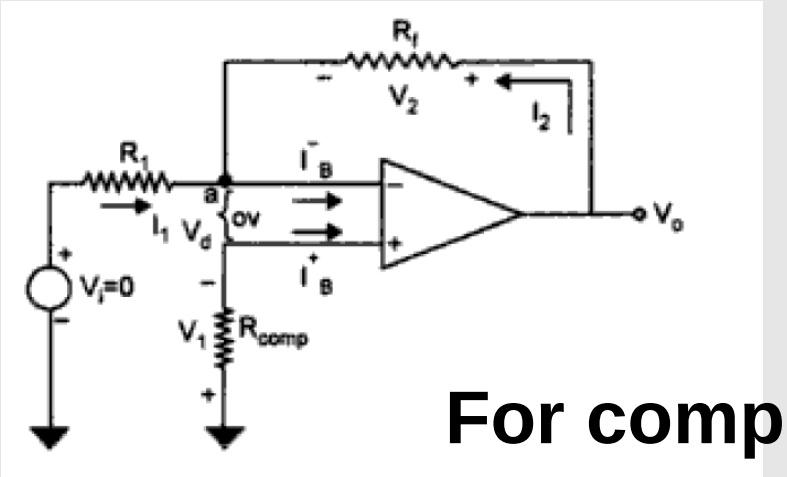

For compensation V_0=0 for V_i=0

$$V_1 = I^+{}_B R_{comp}$$

$$\frac{V_1}{R_{comp}} = I^+{}_B$$

From equation $V_0 = V_2 - V_1$

V_2=V_1 So that $I_2 = \frac{V_2}{R_f}$

Node (a) is at voltage (-V_1)
Voltage ay Non Inverting Terminal :(-V_1)
With V_i=0

$$I_1 = \frac{V_1}{R_1}$$

$$I_2 = \frac{V_2}{R_f}$$

Source:Linear Integrated Circuits,D.ROY CHOUDHURY et.al.

KCL at Node ‘a’

$$I^{-}{}_{B} = I_2 + I_1 = \frac{V_1}{R_1} + \frac{V_1}{R_f} = V_1 \frac{(R_1 + R_f)}{R_1 R_f}$$

$$Assume\ I^{-}{}_{B} = I^{+}{}_{B}$$

$$V_1 \frac{(R_1 + R_f)}{R_1 R_f} = \frac{V_1}{R_{comp}}$$

$$R_{comp} = \frac{R_1 R_f}{R_1 + R_f}$$

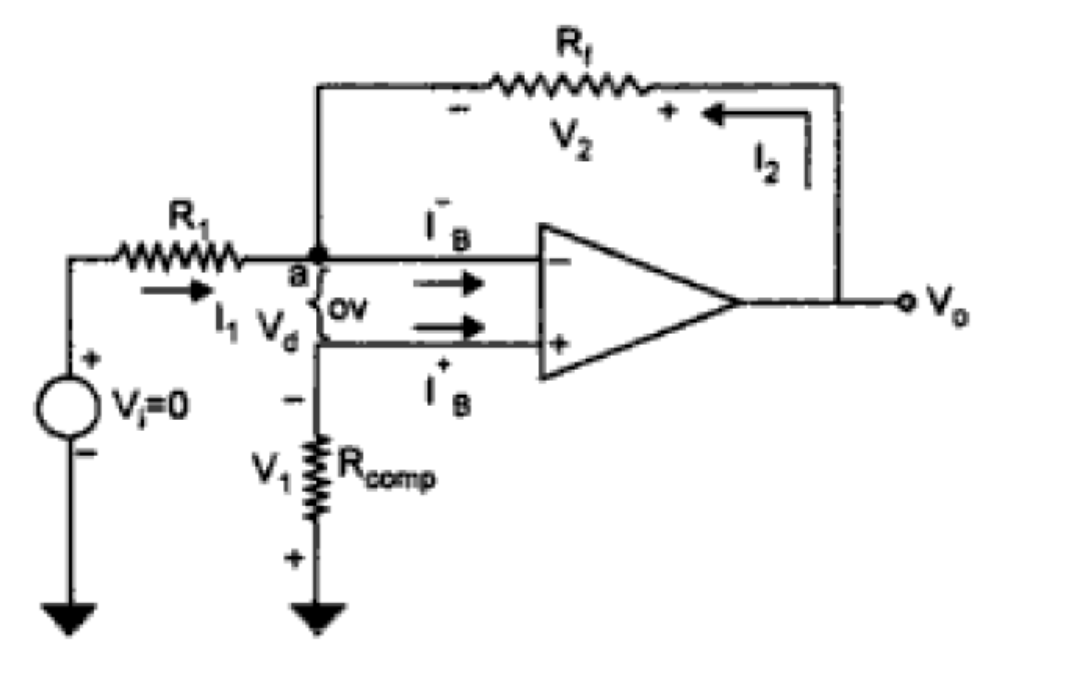

Important:
Compensation resistor should be equal to the parallel combination of resistors to the inverting input terminal

Input offset Current

Bias current compensation will work if both bias currents $I_B^- \text{ and } I_B^+$ are equal.

Input transistors can't be made identical, there will be always be some difference between $I_B^- \text{ and } I_B^+$

The difference is called offset current I_{0S}

$$\left|I_{0S}\right| = I_B^+ - I_B^-$$

Source:Linear Integrated Circuits,D.ROY CHOUDHURY et.al.

Off set current I_{os} :BJT:200nA,FET:10pA

Even with the bias current compensation offset current will produce an output voltage. When V_i =-0

Referring figure

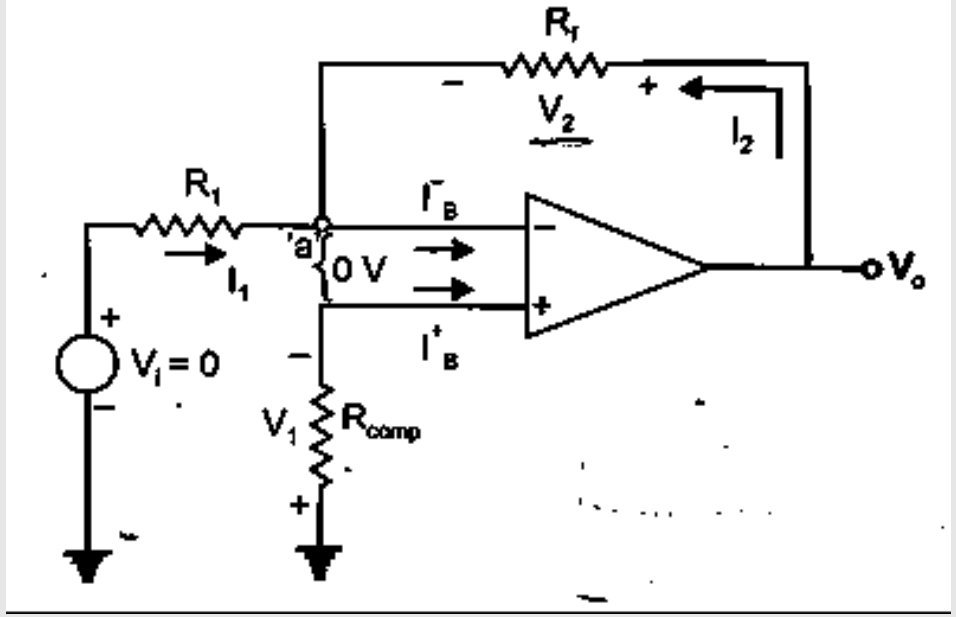

$$V_1 = I_B^{+} R_{comp}, I_1 = \frac{V_1}{R_1}$$

KCL at node a:

$$I_1 + I_2 = I_B^{-}$$

$$I_2 = I_B^{-} - \frac{I_B^{+} R_{comp}}{R_1}$$

$$V_0 = V_2 - V_1$$

$$V_0 = I_2 R_f - V_1 \;\; = I_2 R_f - I_B^{+} R_{comp}$$

$$V_0 = \left(I_B^{-} - \frac{I_B^{+} R_{comp}}{R_1} \right) R_f - I_B^{+} R_{comp}$$

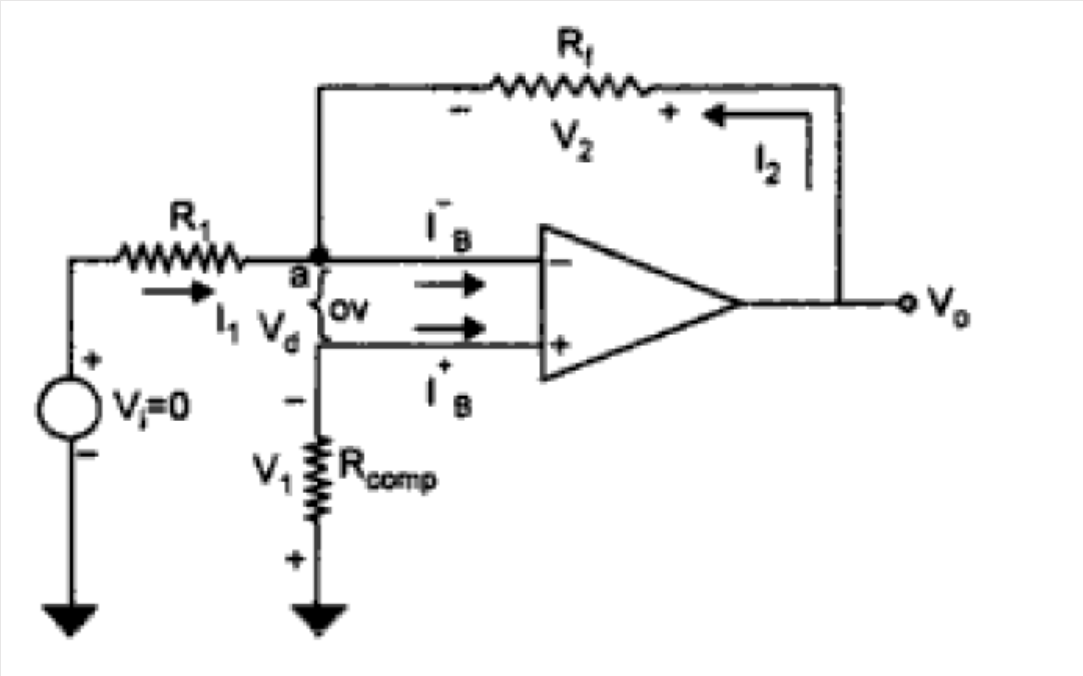

Even with bias current compensation and with the feedback Resistor of 1MΩ

V_0= 1MΩ*200 nA=200 mV

$$V_0 = \left(I_B^- - \frac{I_B^+ R_{comp}}{R_1} \right) R_f - I_B^+ R_{comp}$$

$$V_0 = \left(I_B^- - \frac{I_B^+ \dfrac{R_1 R_f}{R_1 + R_f}}{R_1} \right) R_f - I_B^+ R_{comp}$$

$$= I_B^- R_f - I_B^+ \frac{R_1 R_f}{R_1 + R_f} R_f - I_B^+ \frac{R_1 R_f}{R_1 + R_f}$$

$$= I_B^- R_f - I_B^+ \frac{R_f}{R_1 + R_f} (R_1 + R_f)$$

$$= I_B^- R_f - I_B^+ \frac{R_f}{R_1 + R_f} (R_1 + R_f)$$

$$V_0 = R_f (I_B^- - I_B^+) \qquad V_0 = R_f (I_{os})$$

Even with bias current compensation and with the feedback Resistor of 1MΩ

V_0= 1MΩ*200 nA=200 Mv
To avoid:

1.Need to reduce R_f, but ↓ the gain

2.R_f is not good solution

To design a T network

$$R_t << \frac{R_f}{2}$$

$$R_f = \frac{R^2_t + 2R_tR_s}{R_s}$$

$$R_s = \frac{R^2_t}{R_f - 2R_t}$$

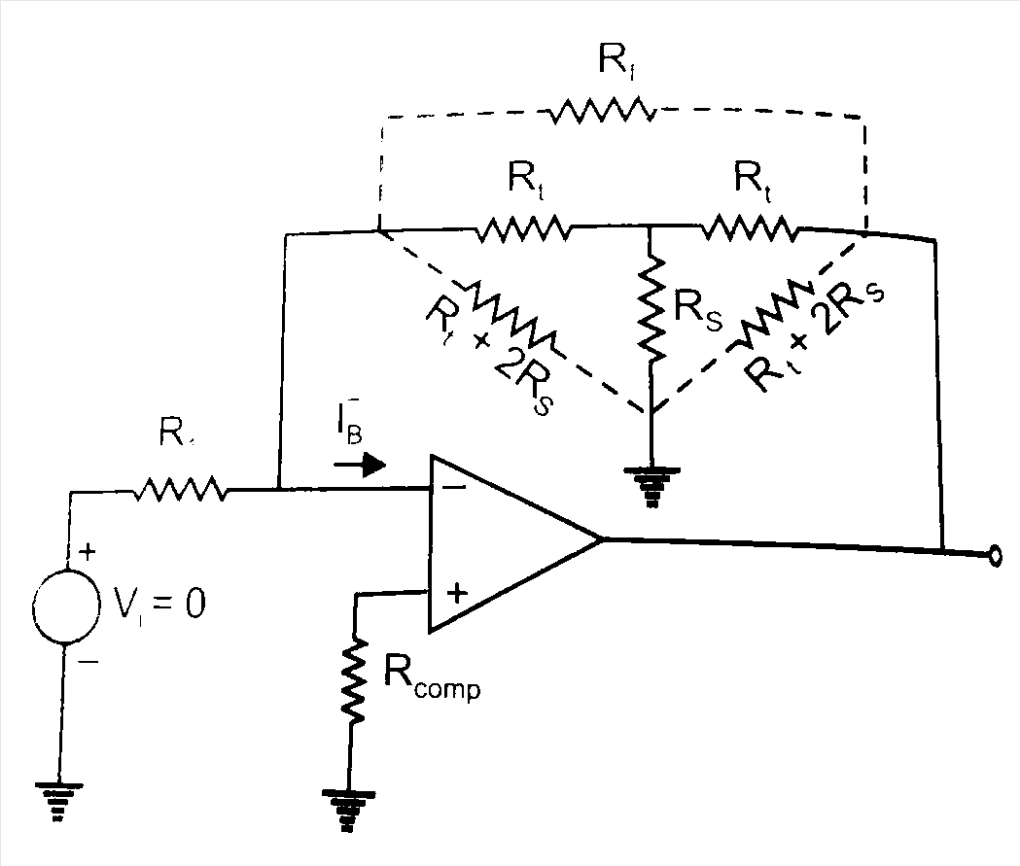

Input offset Voltage

Use of the above compensation techniques

V_0 is not equal 0,V_I=0

Unavoidable imbalances inside the op-amp

Apply a small voltage at the input terminals to make output voltage zero. This voltage is called **input offset Voltage**

Source:Linear Integrated Circuits,D.ROY CHOUDHURY et.al.

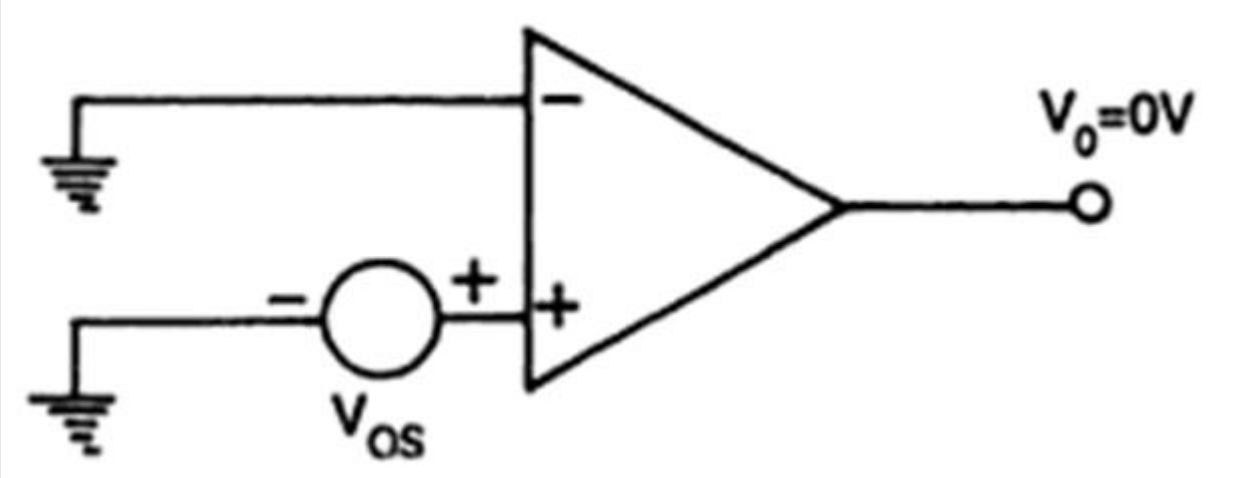

Assume $V_i = 0$

$$V_{ios} = \left| V_i - V_2 \right|$$

$$V_{ios} = \left| 0 - V_2 \right|$$

$$V_{ios} = \left| V_2 \right|$$

voltage divider rule:

$$V_2 = \frac{R_1}{R_1 + R_f} V_O$$

$$V_O = \frac{R_1 + R_f}{R_1} V_2 = 1 + \frac{R_f}{R_1} V_2$$

$$V_O = 1 + \frac{R_f}{R_1} V_{ios}$$

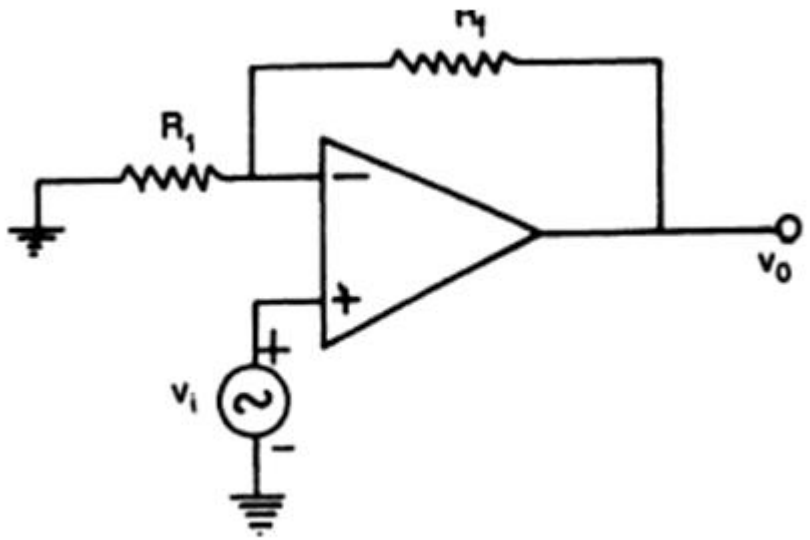

Non-inverting amplifier

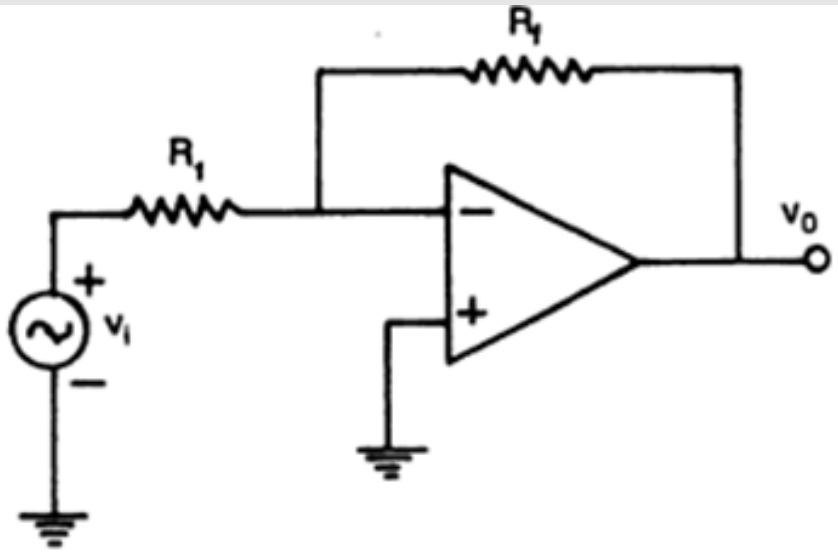

Inverting amplifier

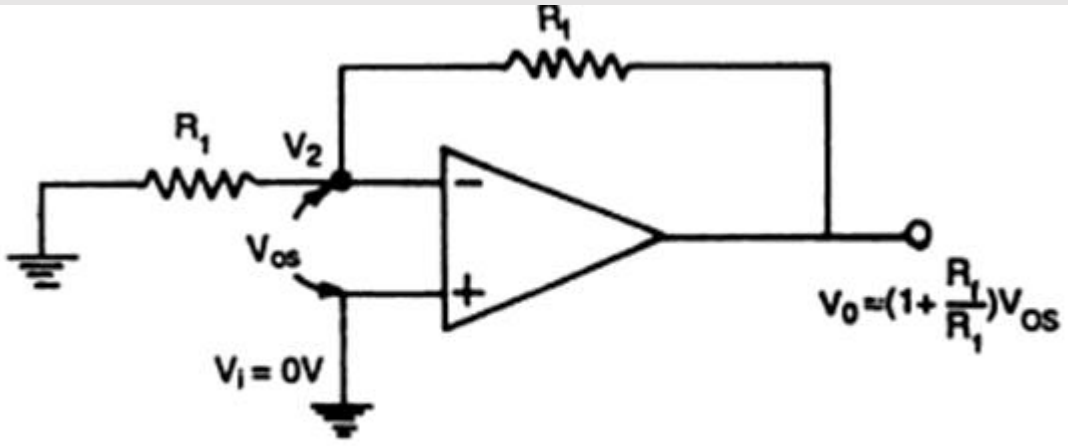

equivalent circuit for $V_i = 0$

Total output offset Voltage

$$V_{OT} = 1 + \frac{R_f}{R_1} V_{ios} + R_f I_B$$

R_{comp} in the circuit, total output offset voltage :

$$V_{OT} = 1 + \frac{R_f}{R_1} V_{ios} + R_f I_{os}$$

OFFSET NULL PIN CONNECTION

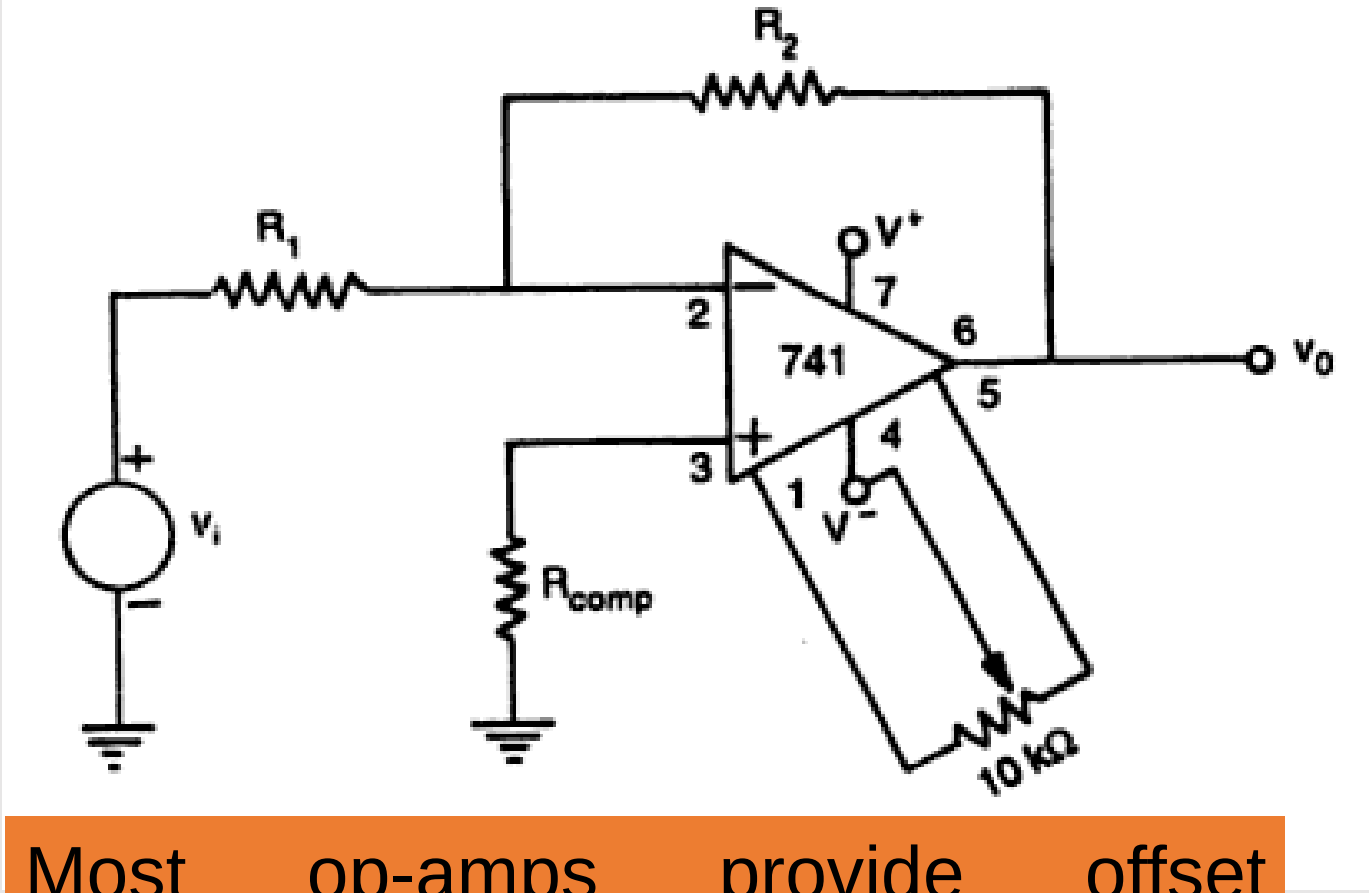

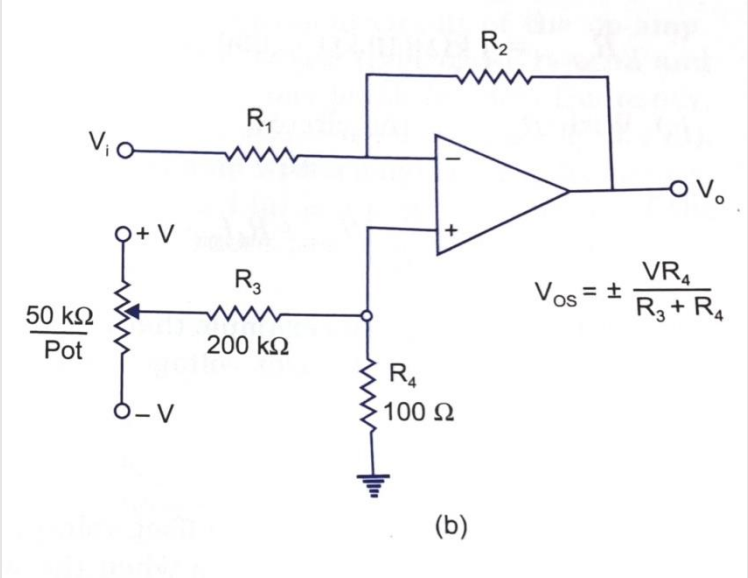

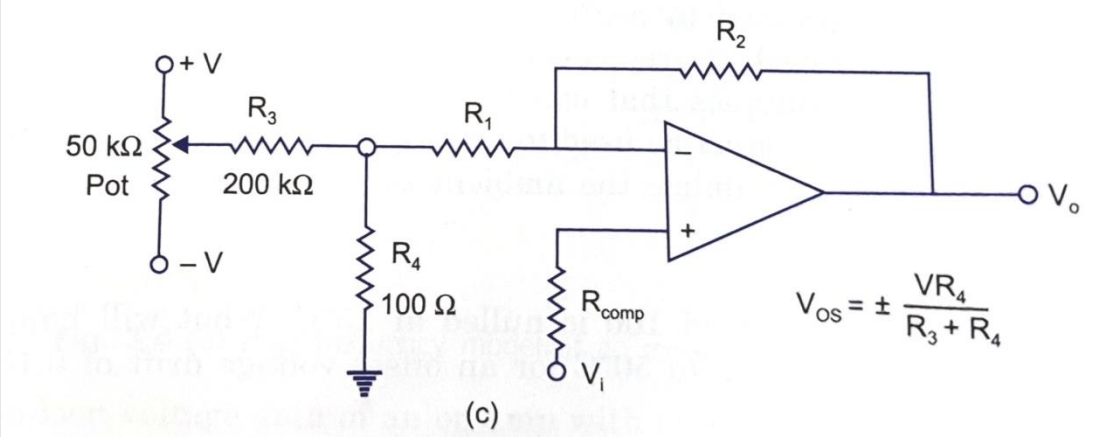

Most op-amps provide offset compensation pins to nullify offset voltage (provided in datasheet of manufacturer

Problem 2: Non-inverting amplifier has $R_1 = 1k\Omega$; $R_f = 10k\Omega$; LM307 opamp has $V_{ios} = 10mV$; $I_B = 300nA$; $\mathrm{I_{os}} = 50\mathrm{nA}$.

A) Find maximum output offset voltage due to V_{ios} and I_B

b) Calculate value of R_{comp} to reduce effect of I_B

C) Calculate max output offset voltage if R_{comp}calculated in (b) is connected in circuit

- $V_{oT} = \left(1 + R_f/R_1\right)V_{ios} + R_f I_B = \left(1 + \frac{10k}{1k}\right)(10mV) + 10k(300n) = 113mV$
- Value of R_{comp} needed
  $R_{comp} = R_1 \parallel R_f = 1k \parallel 10k = 990\Omega$
- When R_{comp} is connected

$$V_{oT} = \left(1 + R_f/R_1\right)V_{ios} + R_f I_{os}$$
$$= \left(1 + \frac{10k}{1k}\right)(10mV) + 10k(50n) = 110.5\ mV$$

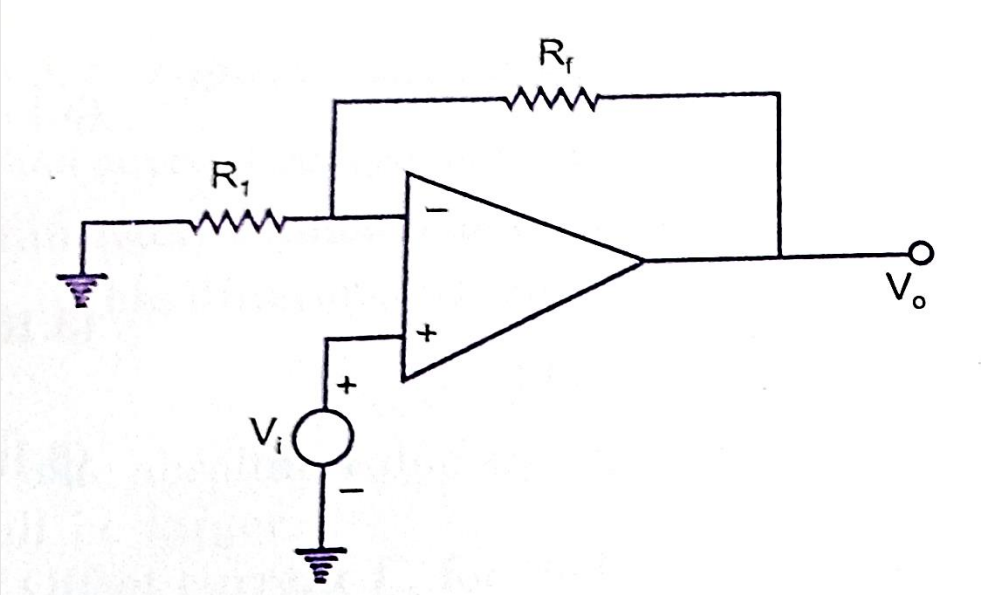

Problem1: Design inverting amplifier with gain -10, input impedance $R_i = 10M\Omega$. Calculate R_t, R_S, R_1

- $R_i \equiv R_1 = 10M\Omega$
- $A_{CL} = -\frac{R_f}{R_1}$ Therefore $R_F = -A_{CL}R_1 = -(-10)(10M) = 100M\Omega$
- Select $R_t \ll R_f/2$ $R_t = 47k\Omega$

$$R_s = \frac{R_t^2}{R_f - 2R_t} = \frac{(47k)^2}{100M - 2*47k} = 22\Omega$$

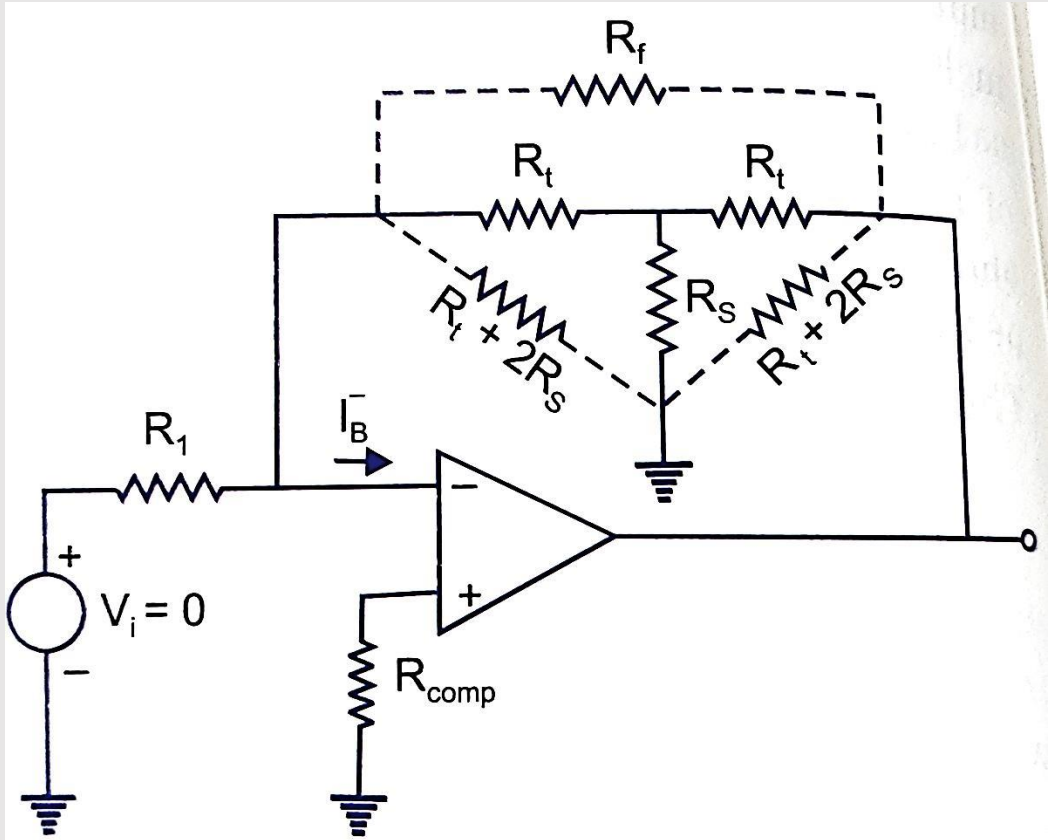

Problem 3: Non inverting amplifier with gain 100 is nulled at 25°C. What will happen to output voltage if temperature rises to $50°C$ for offset voltage drift of 0.15mV/°C.

- Input offset voltage due to temperature rise:
  $0.15mV/°C \times (50°C - 25°C) = 3.75mV$
- Since this is input change: output voltage will change by
- $V_o = V_{os} \times A_{CL}$
  $= 3.75mV \times 100 = 375mV$

Major shift in output voltage.

Voltage Follower

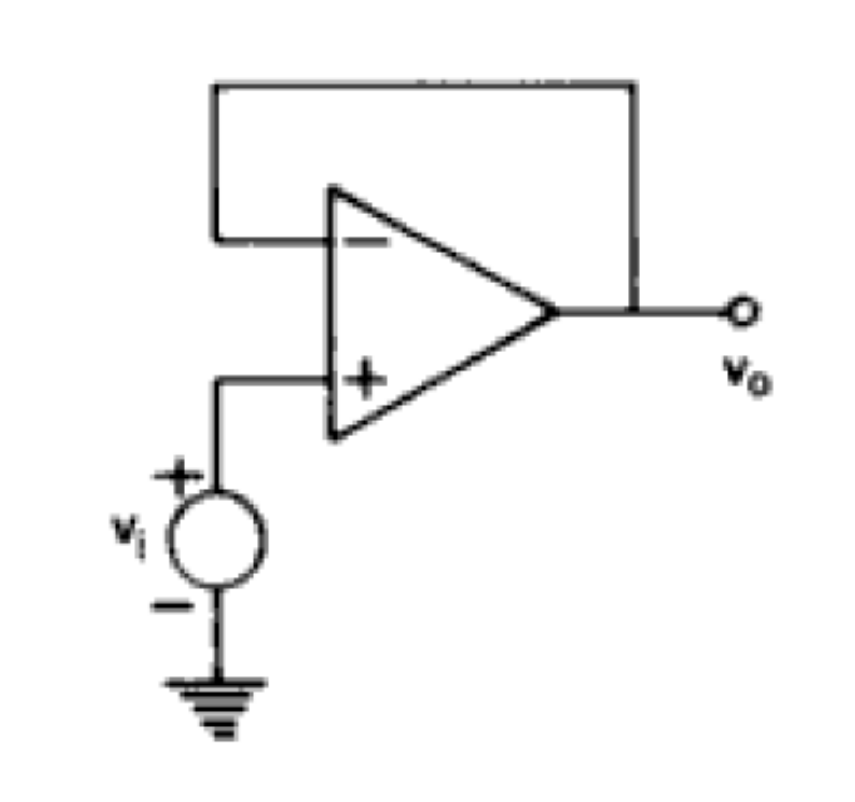

Output=Input

R_f=0

$Vo=V_{in}$

1.AC characteristics (Small signal sinusoidal equivalent)

- Frequency response
- Slew Rate

2. Frequency response

- Ideally – Op-amp should have infinite bandwidth
- If open loop gain is 90dB with dc signal,
  its gain should remain as 90dB with low frequencies and high (RF) frequencies also

2. Frequency response

- Practical op-amp gain decreases(roll-off) at higher frequencies.
- At higher frequencies, the OP-Amp has capacitive component in equivalent circuit (BJT or MOSFET) – internal construction
- For amplifier with one break(corner) frequency, capacitor effects can be expressed as single capacitor:
- High frequency model with single corner frequency
- *Voltage divider in output loop:*

  $$v_0 = -\frac{jX_c}{R_o - jX_c} A_{OL} v_d$$
- Apply $X_c = 1/2\pi f C$ and find gain:
- $A = \frac{v_0}{v_d} = \frac{A_{OL}}{1 + j2\pi f R_0 C}$

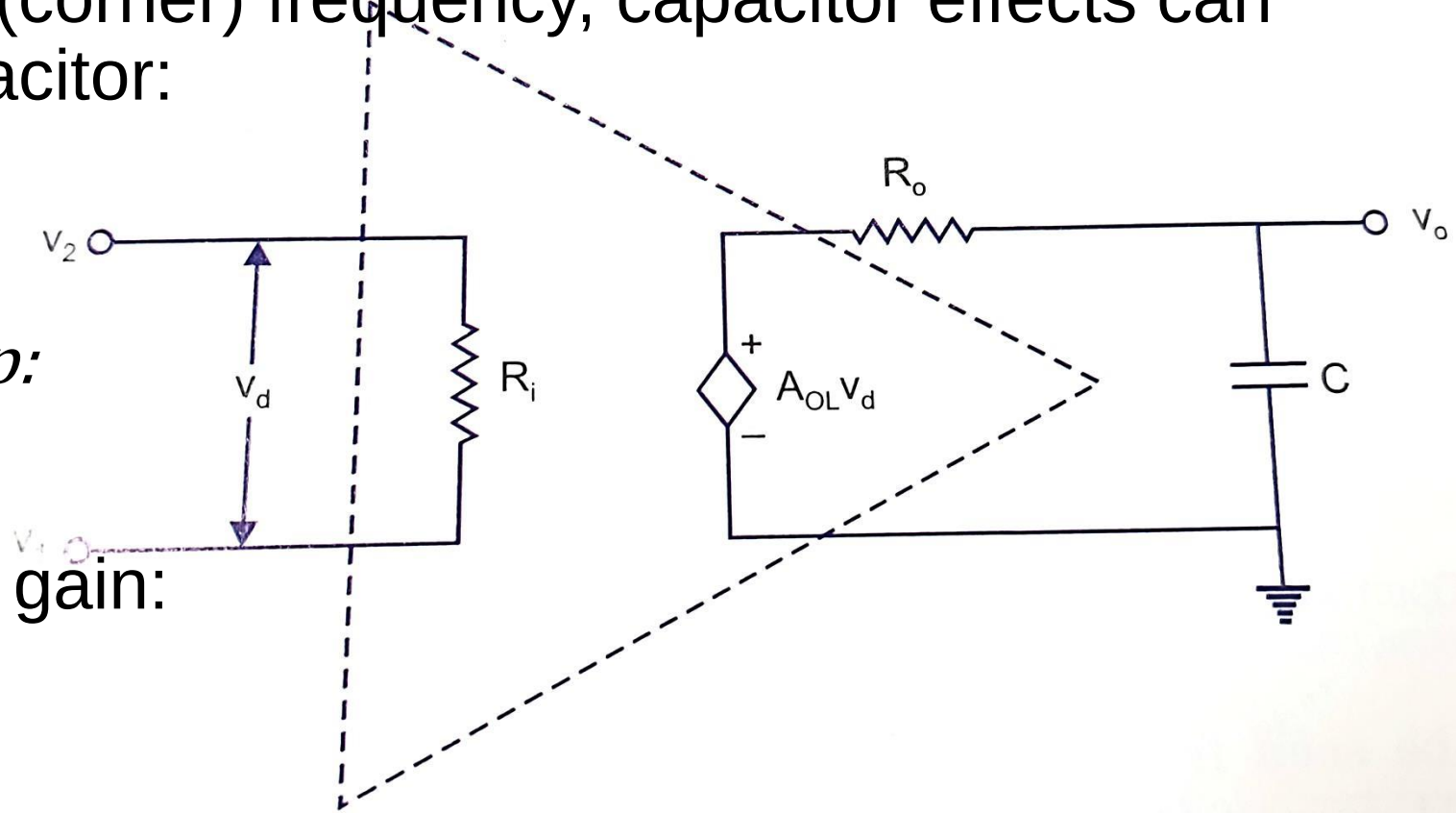

2. Frequency response

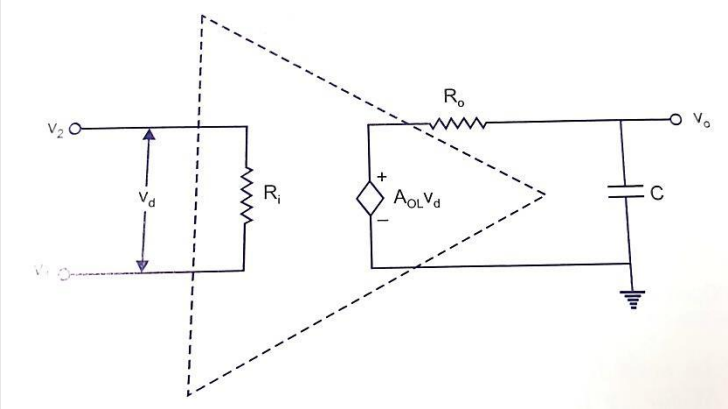

- $A = \frac{A_{OL}}{1+j2\pi f R_0 C} = \frac{A_{OL}}{1+j\left(\frac{f}{1/(2\pi R_o C)}\right)} = \frac{A_{OL}}{1+j\frac{f}{f_1}}$

  where $f_1 = \frac{1}{2\pi R_o C}$ is the corner frequency or upper 3dB frequency

- Magnitude : $|A| = \frac{A_{OL}}{\sqrt{1+(f/f_1)^2}}$

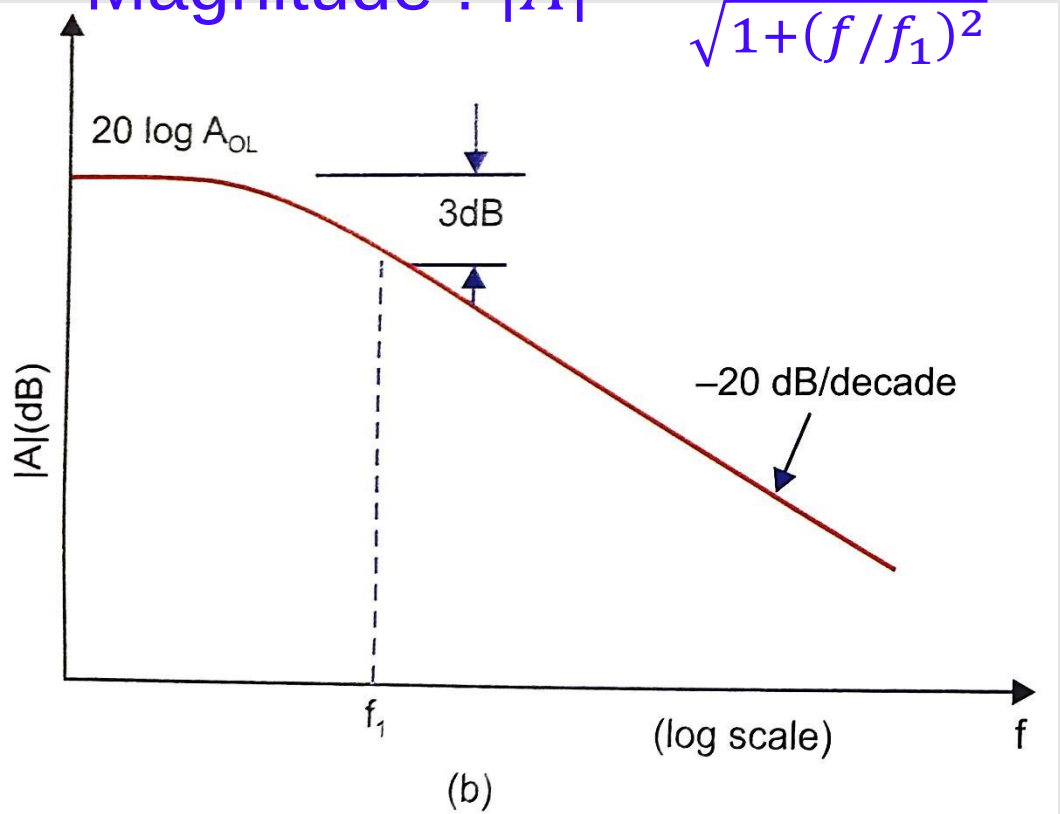

Phase: $\phi = -\tan^{-1}(f/f_1)$

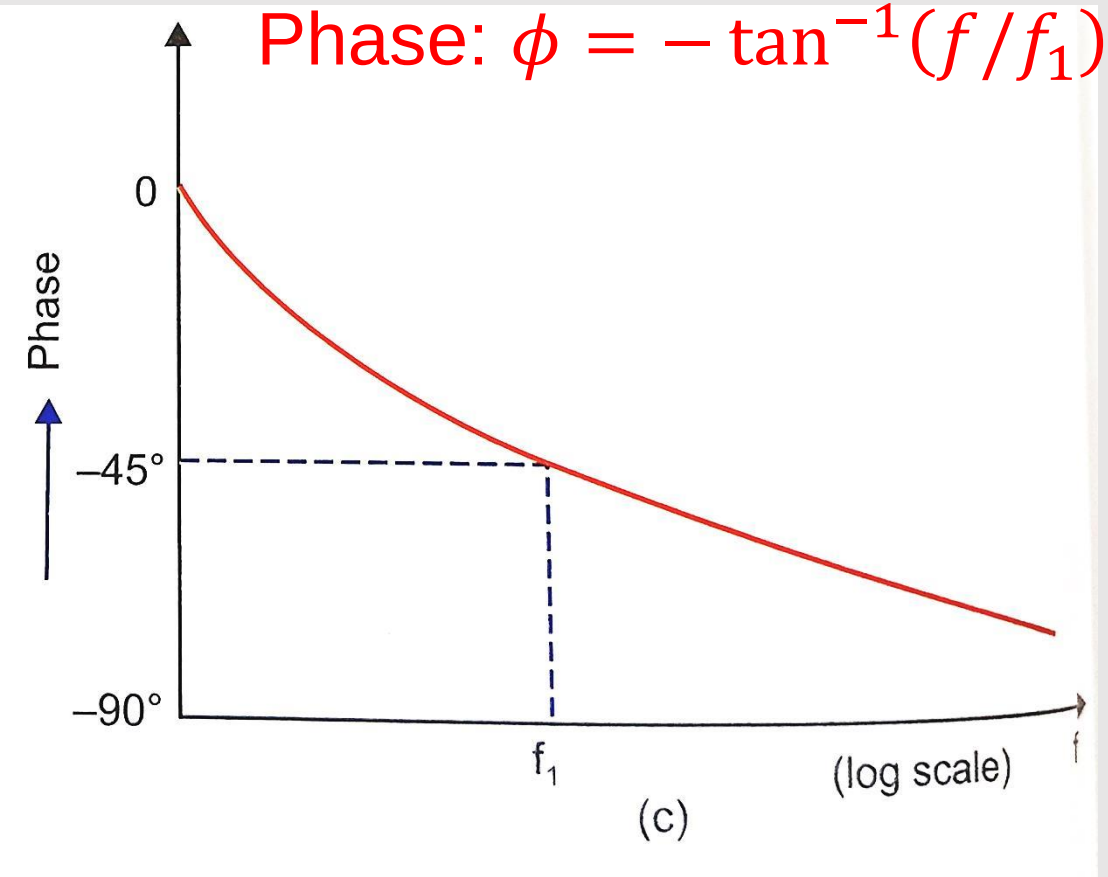

2. Frequency response

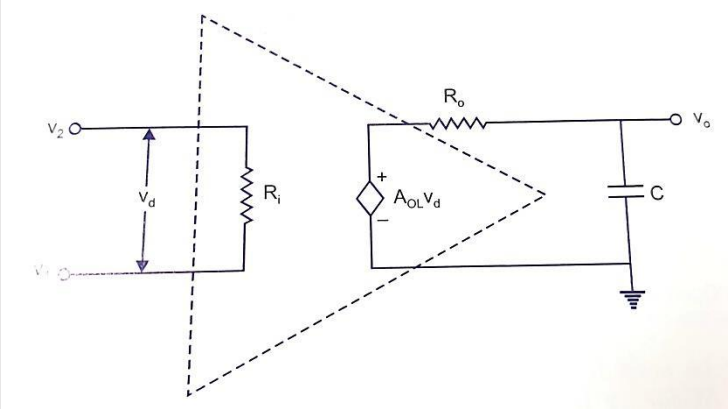

- $A = \frac{A_{OL}}{1+j2\pi f R_0 C} = \frac{A_{OL}}{1+j\left(\frac{f}{1/(2\pi R_O C)}\right)} = \frac{A_{OL}}{1+j\frac{f}{f_1}}$; $f_1 = \frac{1}{2\pi R_O C}$
- Magnitude : $|A| = \frac{A_{OL}}{\sqrt{1+(f/f_1)^2}}$

Phase: $\phi = -\tan^{-1}(f/f_1)$

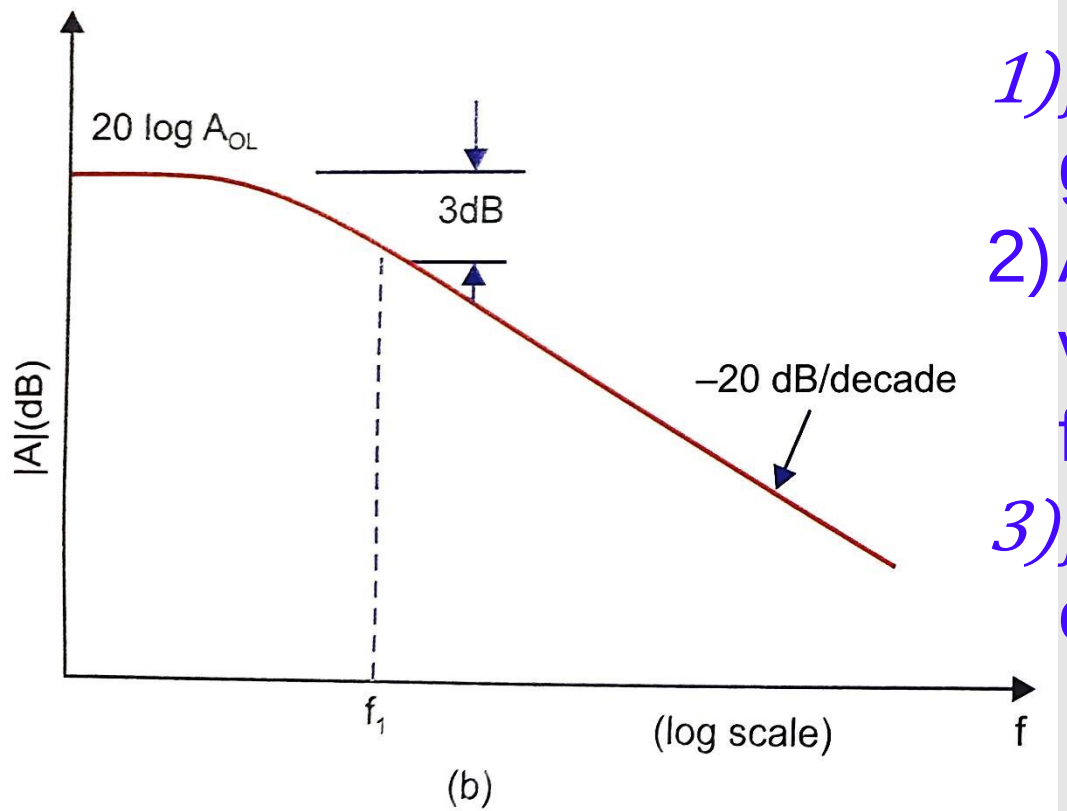

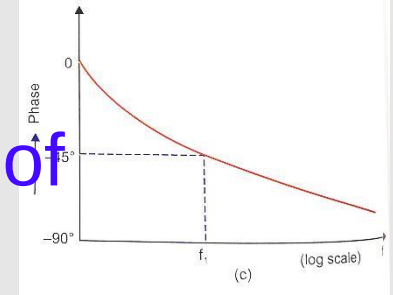

1) $f \ll f_1$ (low frequency: Magnitude of gain in dB: $20\log_{10} A_{OL}$
2) At $f = f_1$, gain is -3dB (less) than dc value of A_{OL}(dB). f_1 is corner frequency
3) $f \gg f_1$ (large frequencies): Gain rolls-off at $-20dB$/decade or $-6dB$/octave

2. Frequency response

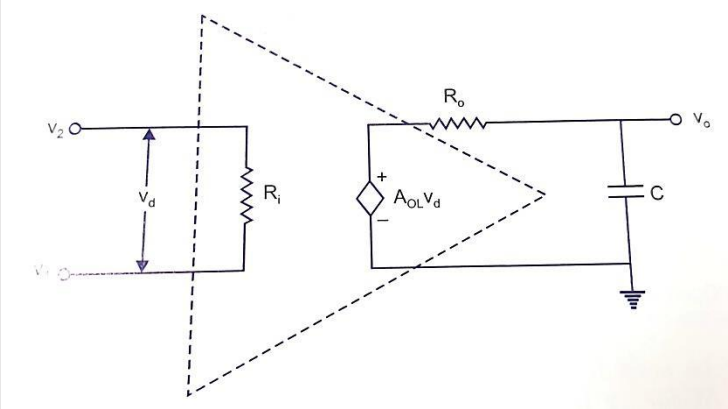

- $A = \frac{A_{OL}}{1+j2\pi f R_0 C} = \frac{A_{OL}}{1+j\left(\frac{f}{1/(2\pi R_o C)}\right)} = \frac{A_{OL}}{1+j\frac{f}{f_1}}$

  where $f_1 = \frac{1}{2\pi R_o C}$ is the corner frequency or upper 3dB frequency

- Magnitude : $|A| = \frac{A_{OL}}{\sqrt{1+(f/f_1)^2}}$

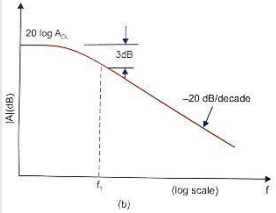

1) $f \ll f_1$ (zero frequency – One decade before f_1): $\phi = 0$
2) At $f = f_1$, $\phi = -45°$ (lagging)
3) $f \gg f_1$ (infinite frequencies – One decade after f_1): $\phi = -90°$ (max phase with single capacitor)

Phase: $\phi = -\tan^{-1}(f/f_1)$

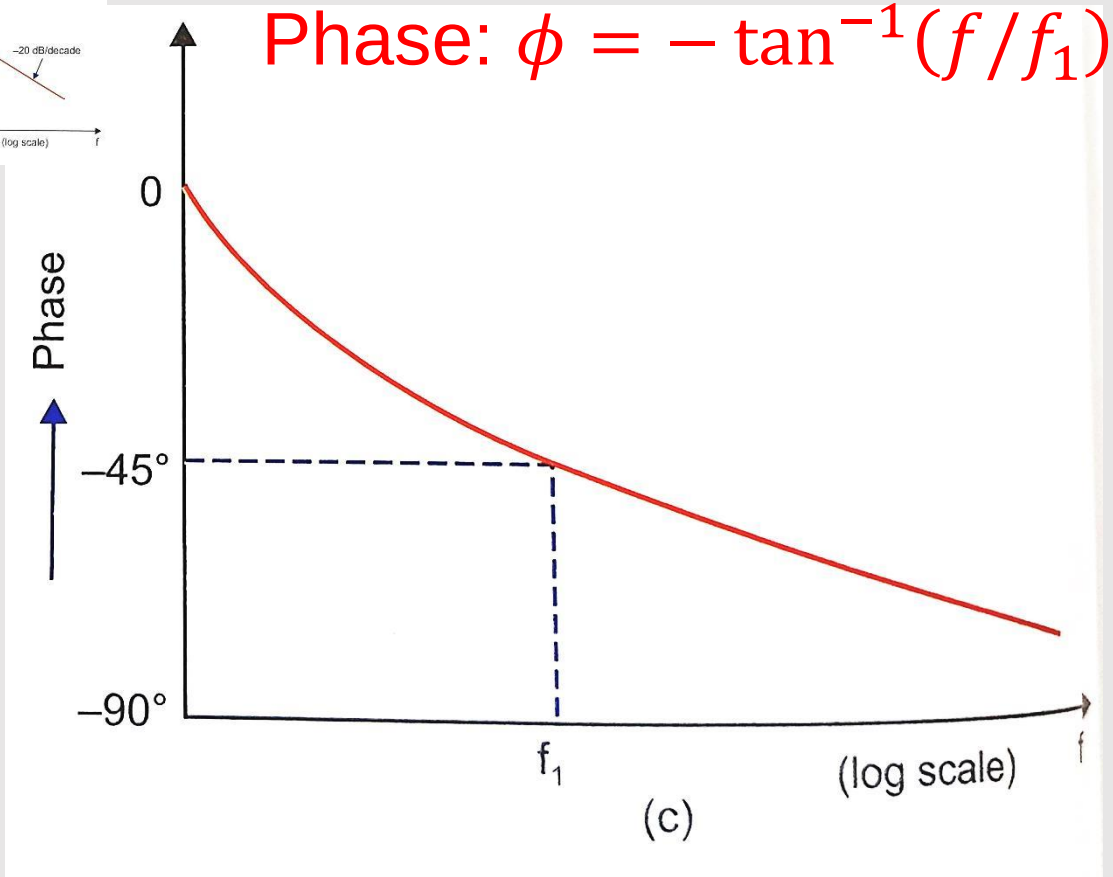

2. Frequency response

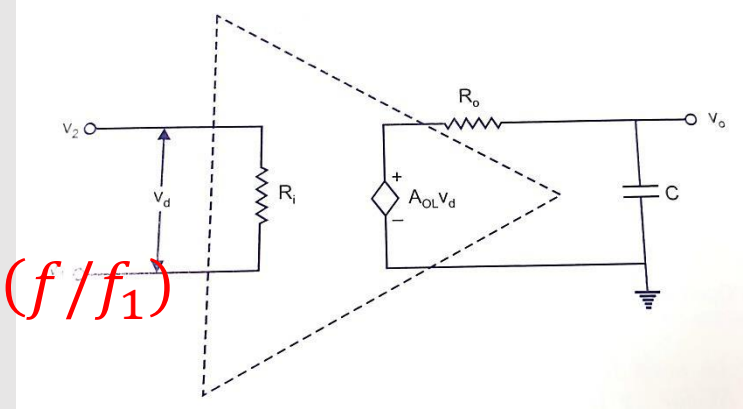

- Magnitude : $|A| = \frac{A_{OL}}{\sqrt{1+(f/f_1)^2}}$

Phase: $\phi = -\tan^{-1}(f/f_1)$

- $A = \frac{A_{OL}}{1+j2\pi f R_0 C} = \frac{A_{OL}}{1+j\left(\frac{f}{1/(2\pi R_O C)}\right)} = \frac{A_{OL}}{1+j\frac{f}{f_1}}$

  where $f_1 = \frac{1}{2\pi R_O C}$ is the corner frequency or upper 3dB frequency

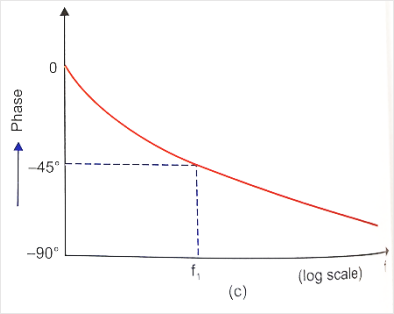

Gain(voltage transfer function) in s- domain:

$$A = \frac{A_{OL}}{1+j\frac{f}{f_1}} = \frac{A_{OL}}{1+j\frac{\omega}{\omega_1}} = \frac{A_{OL}.\omega_1}{\omega_1 + j\omega} = \frac{A_{OL}.\omega_1}{\omega_1 + s}$$

Practical op-amp with three(multiple) stages: (multiple capacitive components – multiple break frequencies) with $0 < f_1 < f_2 < f_3$

$$A = \frac{A_{OL}}{\left(1+j\frac{f}{f_1}\right)\left(1+j\frac{f}{f_2}\right)\left(1+j\frac{f}{f_3}\right)} = \frac{A_{OL}.\omega_1.\omega_2.\omega_3}{(\omega_1+s).(\omega_2+s).(\omega_3+s)}$$

2. Frequency response

$$A = \frac{A_{OL}}{1 + j\frac{f}{f_1}} = \frac{A_{OL}.\omega_1}{\omega_1 + s}$$

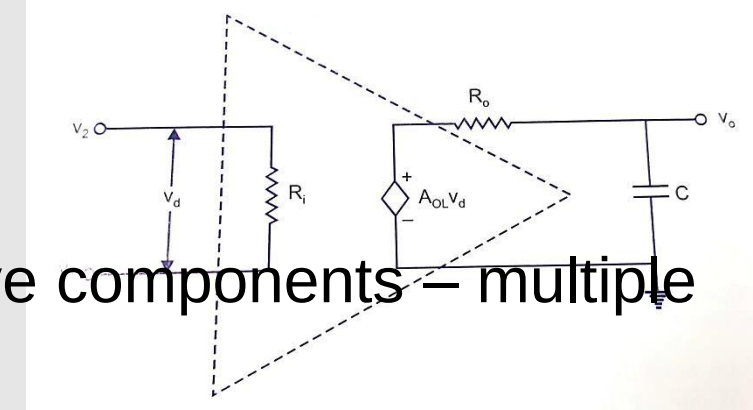

Practical op-amp with three(multiple) stages: (multiple capacitive components – multiple break frequencies) with $0 < f_1 < f_2 < f_3$

$$A = \frac{A_{OL}}{\left(1+j\frac{f}{f_1}\right)\left(1+j\frac{f}{f_2}\right)\left(1+j\frac{f}{f_3}\right)} = \frac{A_{OL}.\omega_1.\omega_2.\omega_3}{(\omega_1+s).(\omega_2+s).(\omega_3+s)}$$

Cascading of RC pair -> increases roll-off:

DC Till 200kHz: flat OL freq response (90dB) with first break freq: 200kHz

200kHz – 2MHz: 90dB to 70dB with rollOff rate: -20dB/decade until second break freq: 2MHz

2MHz – 20MHz: 70dB to 50dB with rollOff rate: -40dB/decade until third break freq: 20MHz

20MHz – 200MHz: 50dB to 30dB with rollOff rate: -60dB/decade

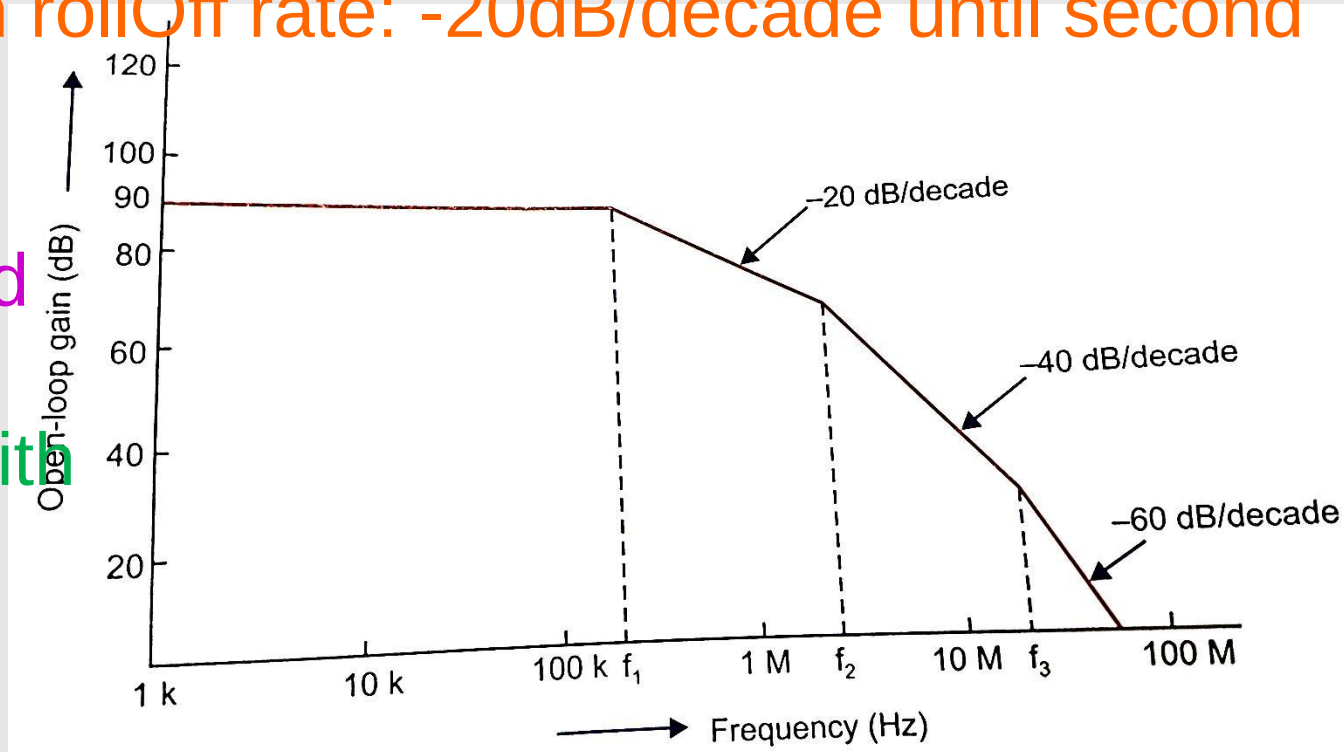

3. Slew rate

- Rise time of an amplifier: time the output takes to change from 10% to 90% of final value for a step input.
- **Rise time =0.35/BW where BW is amplifier's bandwidth**
- Ideal rise time = 0 as BW = ∞ - Output responds immediately

- For large signal, $V_{in} > 1$volt, Op-amp rise time is limited by slew rate
- Slew rate: Maximum rate of change of output voltage caused by a step input voltage (usually in $V/\mu s$)
- Example: $1V/\mu s$ slew rate: Output rises or falls at 1V in one microsecond
- Practical IC: $0.1V/\mu s$ to 1000V$/\mu s$
- It is function of temperature. Decreases with increase in temperature.

3. Slew rate

- Slew rate: **Maximum rate of change of output voltage caused by a step input voltage (usually in $V/\mu s$)** $\left.\frac{dv_o}{d_t}\right|_{max}$
- Cause: A capacitor is usually placed inside or outside Op-amp to prevent oscillation; and this capacitor may prevent output to respond immediately to fast changing input
- Rate at which output comes across capacitor: $\frac{dv_c}{dt} = \frac{I}{C}$
  I: max current provided by op-amp to capacitor
- For faster slew rate: op-amp should have higher current I or smaller compensation capacitor.
- IC 741: $C = 30pF$; $I_{max} = 15\mu A$ (max charging current)
- Slew rate: $\left.\frac{dv_c}{d_t}\right|_{max} = \frac{I_{max}}{C} = \frac{15\mu A}{30pF} = 0.5V/\mu S$

Comparison of Square wave input and its output with slew rate of $1V/\mu s$

- Square wave input

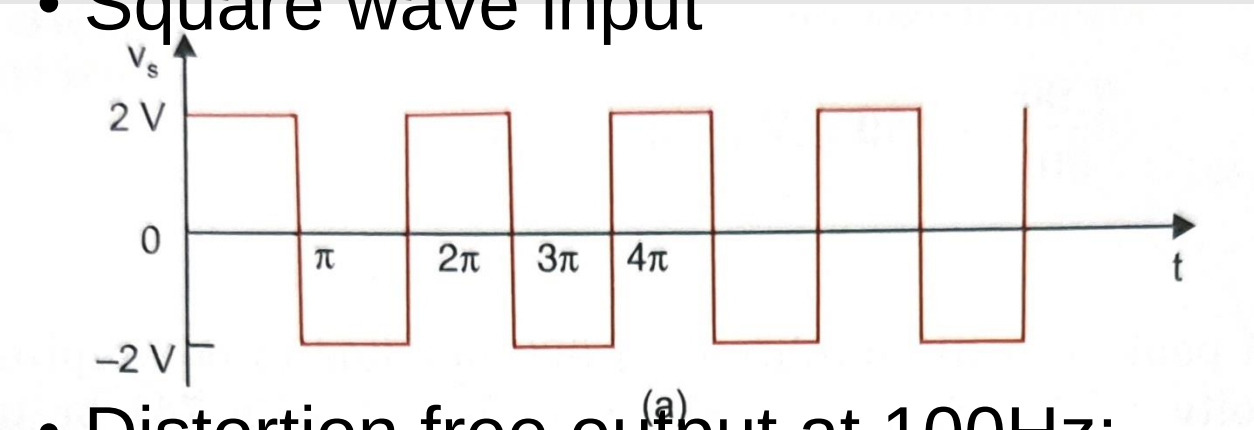

- Distortion free output at 100Hz:

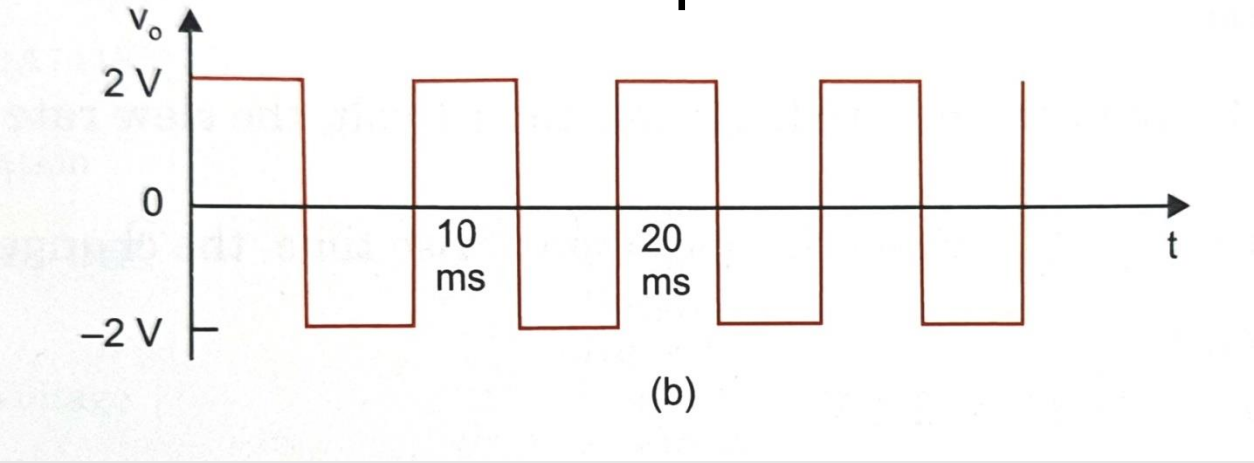

Distorted output at 10kHz:

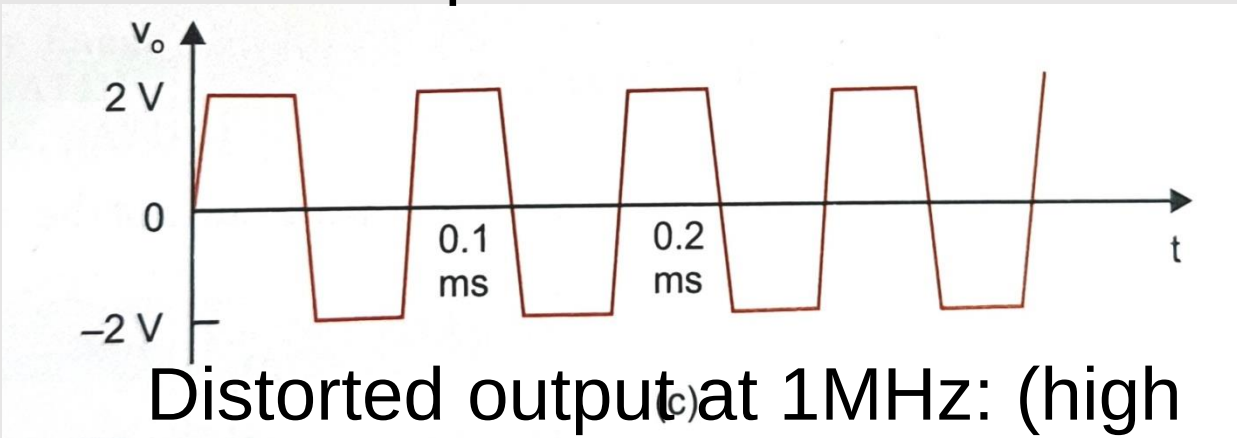

Distorted output at 1MHz: (high frequency effects of RC components)

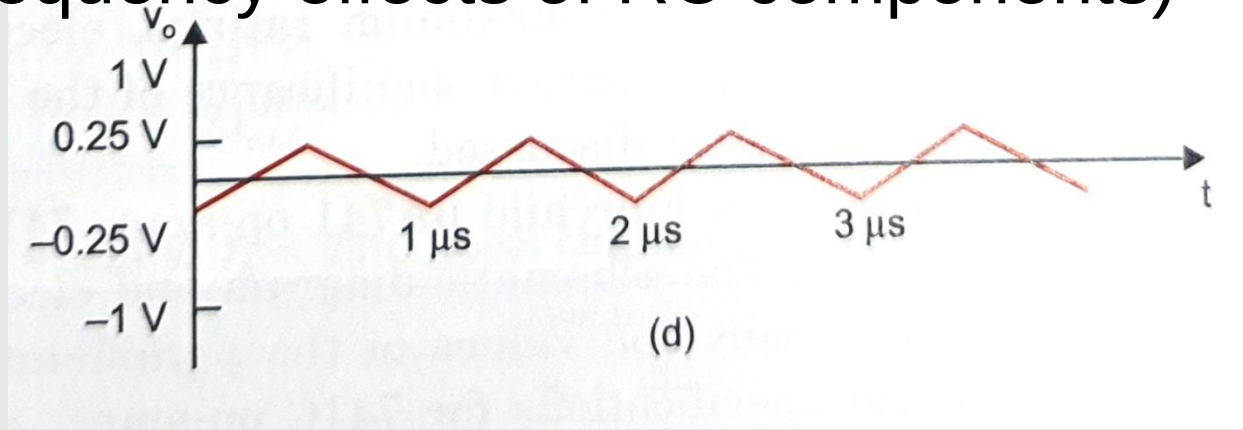

3. Slew rate

- Slew rate limits response of all large signal waveshapes.
- For sine wave input: $v_s = V_m \sin \omega t$ (V_m peak voltage)
- Output: $v_o = V_m \sin \omega t$
- Rate of change of output: $\frac{dv_0}{d_t} = \omega V_m \cos \omega t$
- Slew rate: max rate of change of output

$$SR = \left.\frac{dv_o}{dt}\right|_{max} = \omega V_m$$

- Slew rate= $2\pi f V_m$ V/s

$$= \frac{2\pi f V_m}{10^6}\ V/\mu s$$

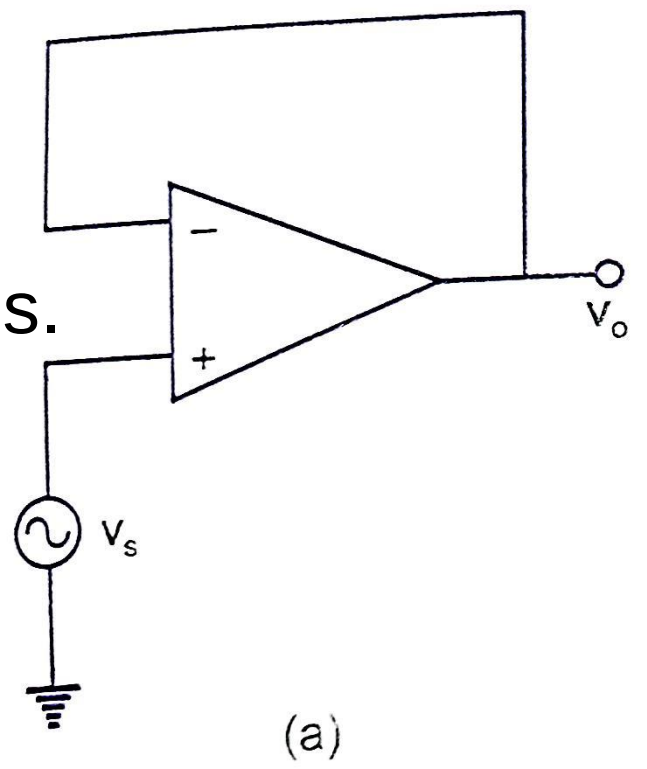

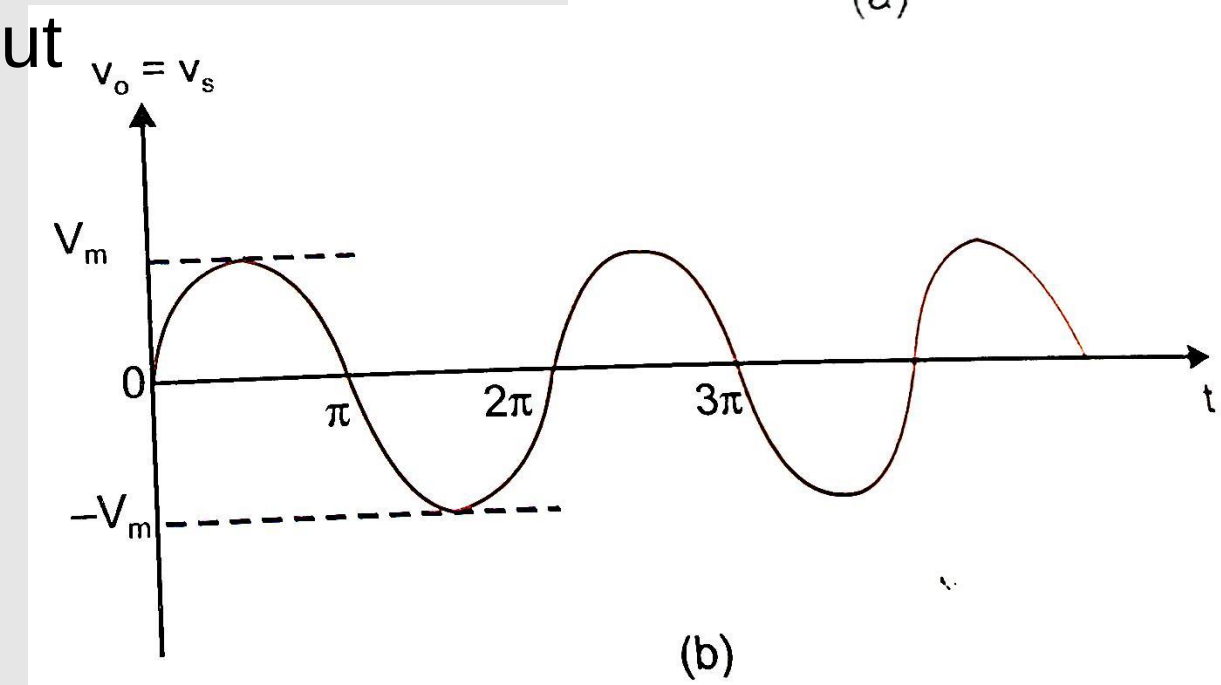

3. Slew rate

- $SR = \left.\frac{dv_o}{dt}\right|_{max} = \omega V_m = 2\pi f V_m$ V/s= $\frac{2\pi f V_m}{10^6}\ V/\mu s$
- If RHS is less than SR specified in Op-amp by manufacturer, then output will not be distorted
- If f or V_m is increased such that circuit SR is greater than the SR specified by manufacturer, then output will be distorted
- Max input frequency f_{max} at which we can obtain undistorted output for V_m

  $f_{max} = \frac{SR}{2\pi V_m} \times 10^6$
- f_{max} is full power response (max freq of amplitude sine wave for op-amp without distortion)

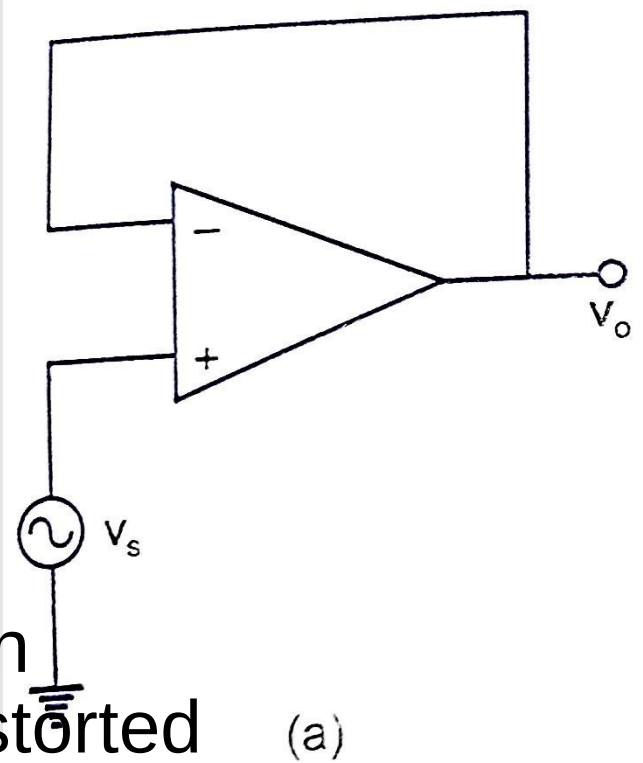

(a)

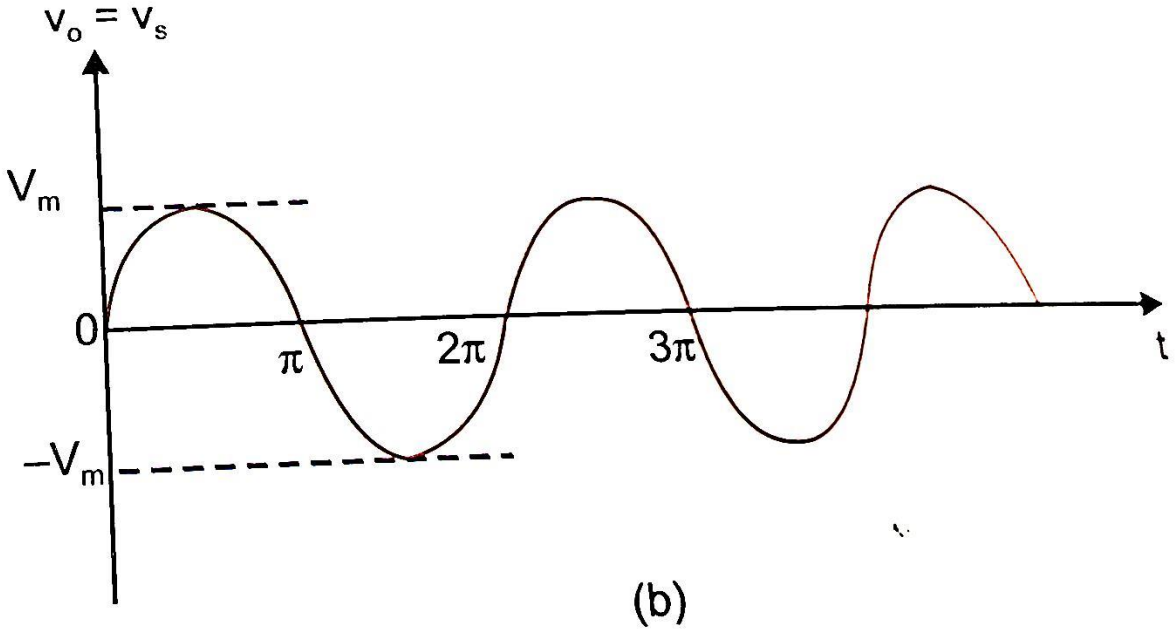

(b)

Problem 1:Output of op-amp voltage follower is triangular waveform for a square wave input of frequency $2MHz$, 6V peak to peak amplitude. What is the slew rate of op-amp ?

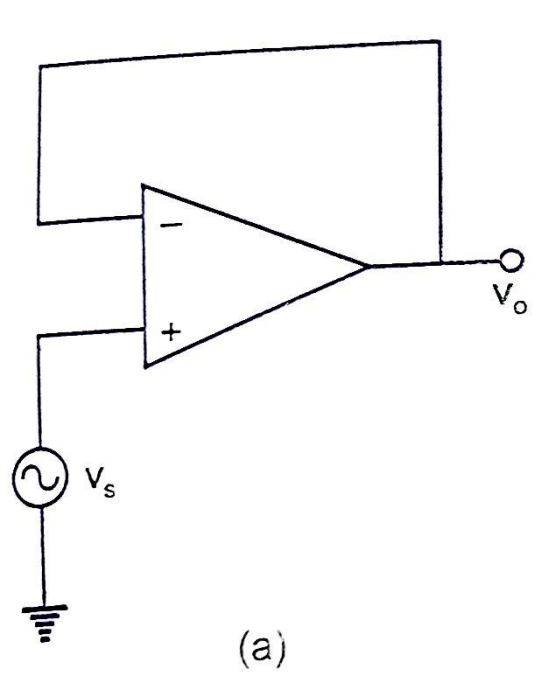

- One time period T=$\frac{1}{f} = \frac{1}{2M} = 0.5\mu s$
- In half time period (T/2), voltage changes from -3 to 3 (6V)
- $SR = \left.\frac{dv_o}{dt}\right|_{max} = \frac{3-(-3)}{T/2} = \frac{6}{0.5\mu/2} = 24V/\mu s$

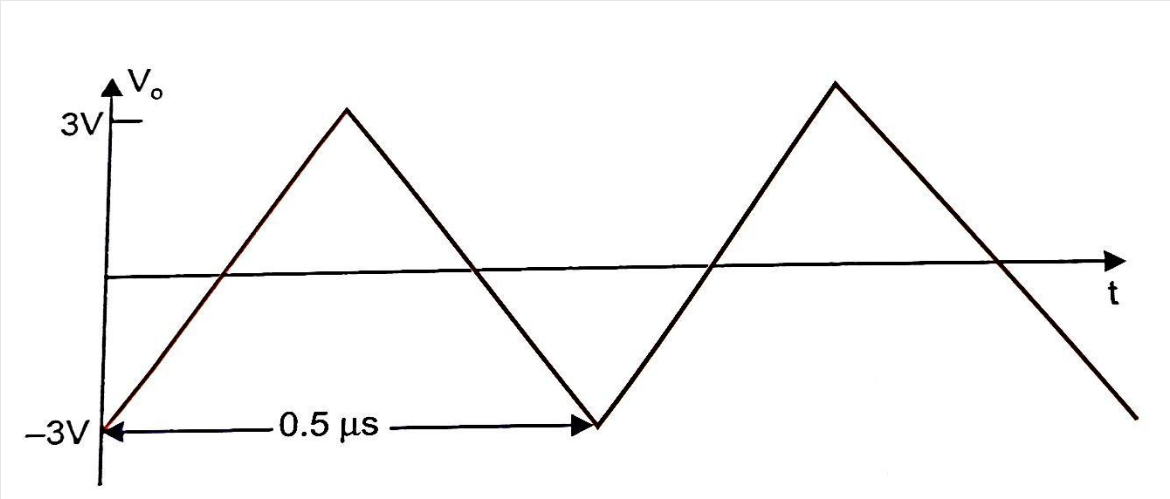

Problem 2: 741C op-amp is used as inverting amplifier with gain of 50. Voltage gain vs frequency curve is flat upto 20kHz. What max peak to peak input signal can be applied without distorting output? Note: Slew rate is 0.5V/μs

- Slew rate SR=0.5$V/\mu s$ (given)
- We know: $SR = \left.\frac{dv_o}{dt}\right|_{max} = \omega V_m = 2\pi f V_m$ V/s= $\frac{2\pi f V_m}{10^6}\ V/\mu s$
- $0.5 = \frac{2\pi(20\times10^3)V_m}{10^6}$
- $V_m = 3.98V$ peak
- V_o(peak to peak) =2$V_m = 7.96$ (max undistorted output)
- For this case, let V_{in} be max input with no output distortion

Problem 2: 741C op-amp is used as inverting amplifier with gain of 50. Voltage gain vs frequency curve is flat upto 20kHz. What max peak to peak input signal can be applied without distorting output? Note: Slew rate is 0.5V/μs

- Slew rate SR=0.5$V/\mu s$ (given)
- We know: $SR = \left.\frac{dv_o}{dt}\right|_{max} = \omega V_m = 2\pi f V_m$ V/s= $\frac{2\pi f V_m}{10^6}\ V/\mu s$
- $0.5 = \frac{2\pi(20\times10^3)V_m}{10^6}$
- $V_m = 3.98V$ peak
- V_o(peak to peak) =2$V_m = 7.96$ (max undistorted output)
- For this case, let V_{in} be max input with no output distortion
- We know: $|A_v| = 50 \quad \frac{V_o}{V_{in}} = 50 \quad V_{in} = \frac{V_0}{50} = \frac{7.96}{50} = 159mV$ (peak to peak)

Problem 3:A square wave of peak to peak amplitude of 500mV has to be amplified to peak to peak amplitude of 3V with rise time of $4\mu S$ or less. Can 741 with slew rate of $0.5V/\mu s$ be used?

- Output voltage > 1 V, so Slew rate is limiting factor
- Rise time definition: time for output to rise from 10% to 90% if peak.

$$\Delta t = 4\mu s \quad \Delta v = \frac{90}{100}.3 - \frac{10}{100}.3 = 2.7 - 0.3 = 2.4V$$

- Required SR=$\frac{\Delta v}{\Delta t} = \frac{2.4}{4\mu s} = 0.6V/\mu s$
- Since 741 has lower slew rate (0.5V/μs) than the given circuit's slew rate, 741 is too slow to respond and will give distorted output. It cannot be used.

Applications of OP-AMP

Linear Application : (or) Linear Circuits

The output signal of the same nature as the input

The output signal varies in accordance with the input within the limits set by the saturation level and slew rate

Applications

Addition also called Summing Amplifier

(Introducing the case summing, scaling, and averaging amplifiers)

Integration(Integrator)

Differentiation (Differentiator)

Multiplication

Comparison(Comparator)

1. Applications of OP-AMP

- **summing**,
- scaling, and
- averaging amplifiers,
- I/V and V/I converter,
- Integrator,
- Differentiator,
- Instrumentation amplifiers and
- Precision Rectifiers.

1. Scale changer/inverter

- Basic inverting amplifier – if $K = R_f/R_1$ (K is real constant) then, closed loop gain $A_{CL} = -K$
- Designer may select as $K = 1$: $R_f = R_1$
- The circuit is inverter (output is 180° out of phase) Magnitudes are same

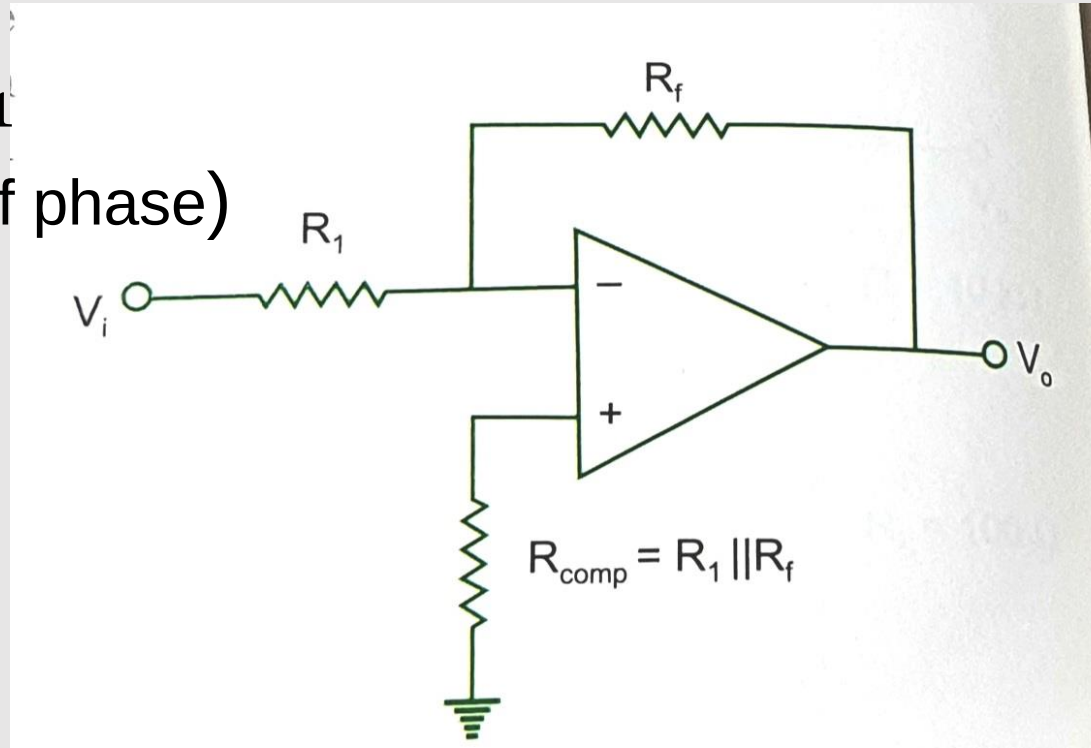

Fig. 4.1 Scale changer for ($R_f/R_1 = K$) and phase inverter for ($R_f/R_1 = 1$)

2.1. Summing amplifier: **Inverting summing amplifier**

- Output is sum of several inputs : V_1, V_2, V_3 through resistors R_1, R_2, R_3
- **Assuming $A_{OL} \to \infty$ and $R_i = \infty$, no current into input of Opamp hence no voltage drop across R_{comp}**
- Non inverting terminal is at ground
- Inverting terminal (a) is at virtual ground potential

$V_a = 0V$

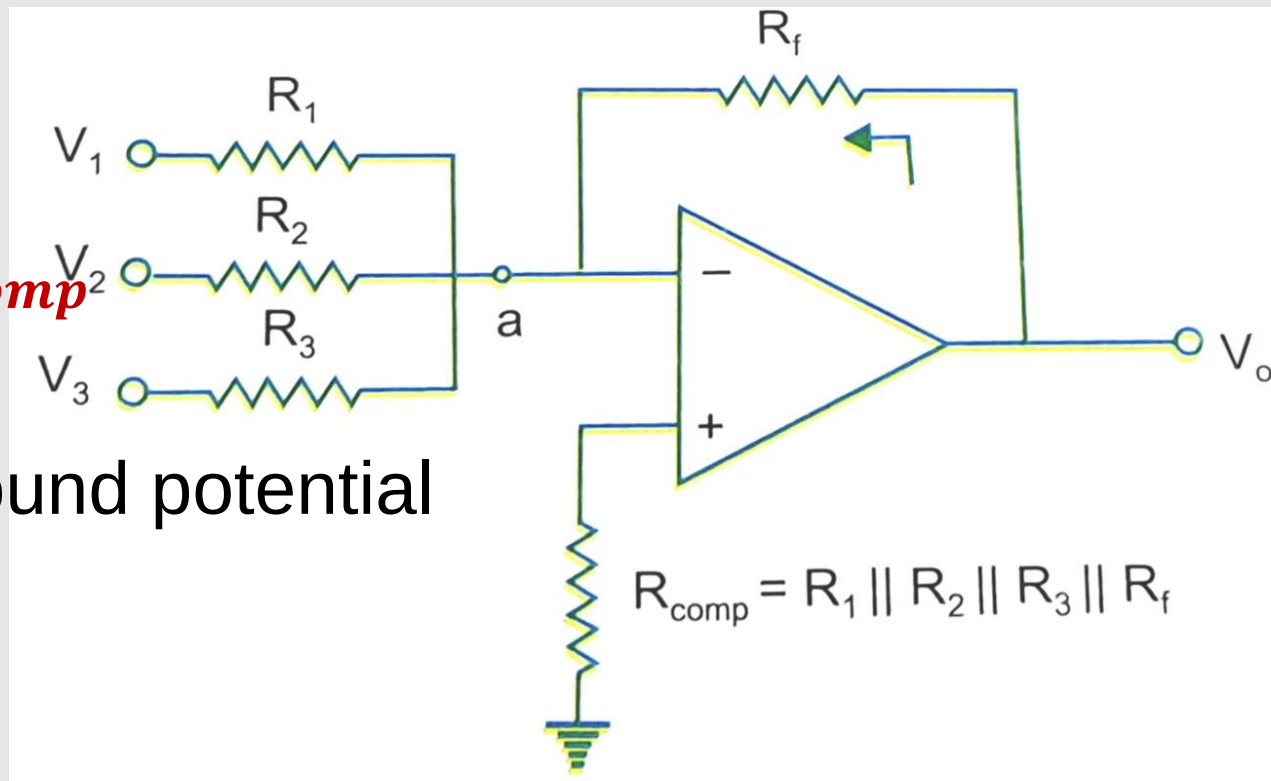

Fig. 4.2 (a) Inverting summing amplifier

2.1. Summing amplifier: **Inverting summing amplifier**

- Nodes are marked as $\boldsymbol{b, c, d, a, e}$
- Apply KCL at a: (sum of currents entering = currents leaving)

$$\boldsymbol{V_a = 0V}$$

$$I_{ba} + I_{ca} + I_{da} = I_{ae}$$

$$\frac{V_1 - V_a}{R_1} + \frac{V_2 - V_a}{R_2} + \frac{V_3 - V_a}{R_3} = \frac{V_a - V_o}{R_f}$$

$$\frac{V_0}{R_f} = -\frac{V_1}{R_1} - \frac{V_2}{R_2} - \frac{V_3}{R_3}$$

$$V_0 = -\left(\frac{R_f}{R_1}V_1 + \frac{R_f}{R_2}V_2 + \frac{R_f}{R_3}V_3\right)$$ Output is a **weighted sum** of inputs

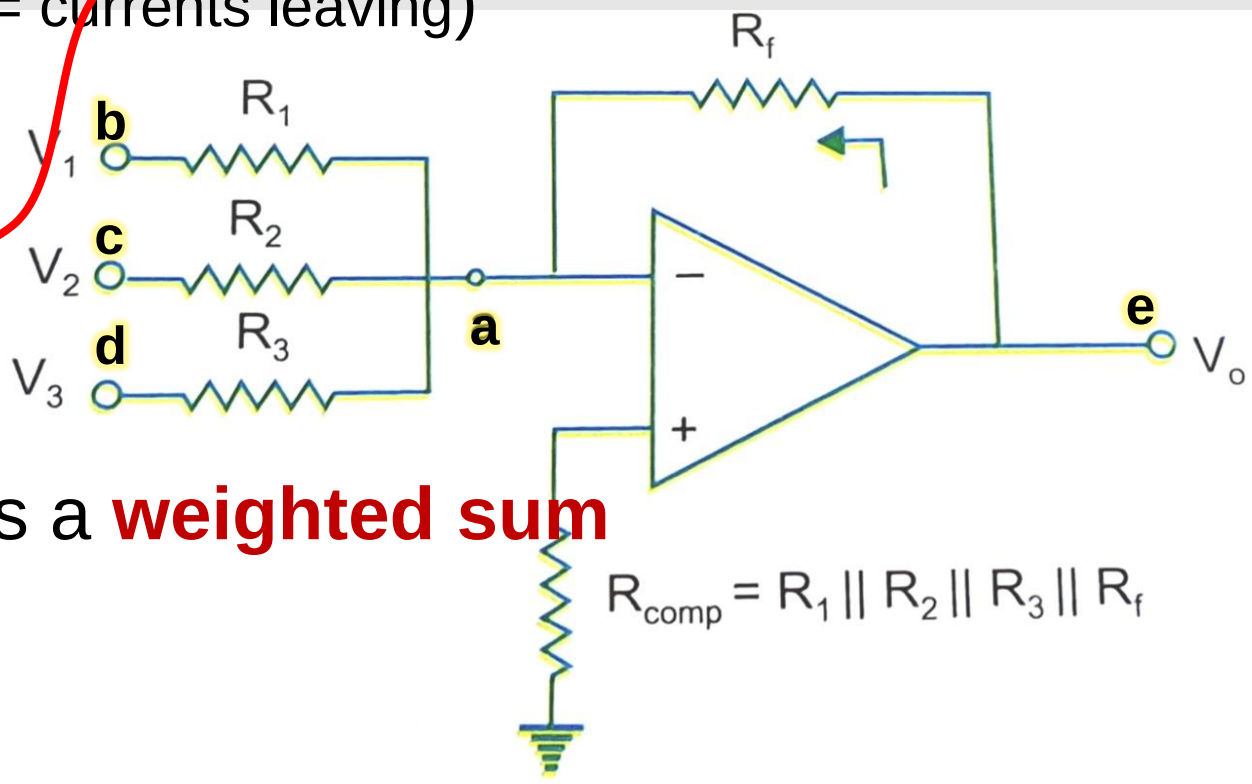

Fig. 4.2 (a) Inverting summing amplifier

2.1. Summing amplifier: **Inverting summing amplifier**

$$V_0 = -\left(\frac{R_f}{R_1}V_1 + \frac{R_f}{R_2}V_2 + \frac{R_f}{R_3}V_3\right)$$

- <u>Special case1</u>:

$$R_1 = R_2 = R_3 = R_f$$

$$V_0 = -(V_1 + V_2 + V_3)$$ **(sum)**

- <u>Special case 2</u>:

$$R_1 = R_2 = R_3 = 3R_f$$

$$V_0 = -\frac{(V_1+V_2+V_3)}{3}$$

This gives **average of input signals** (inverted)

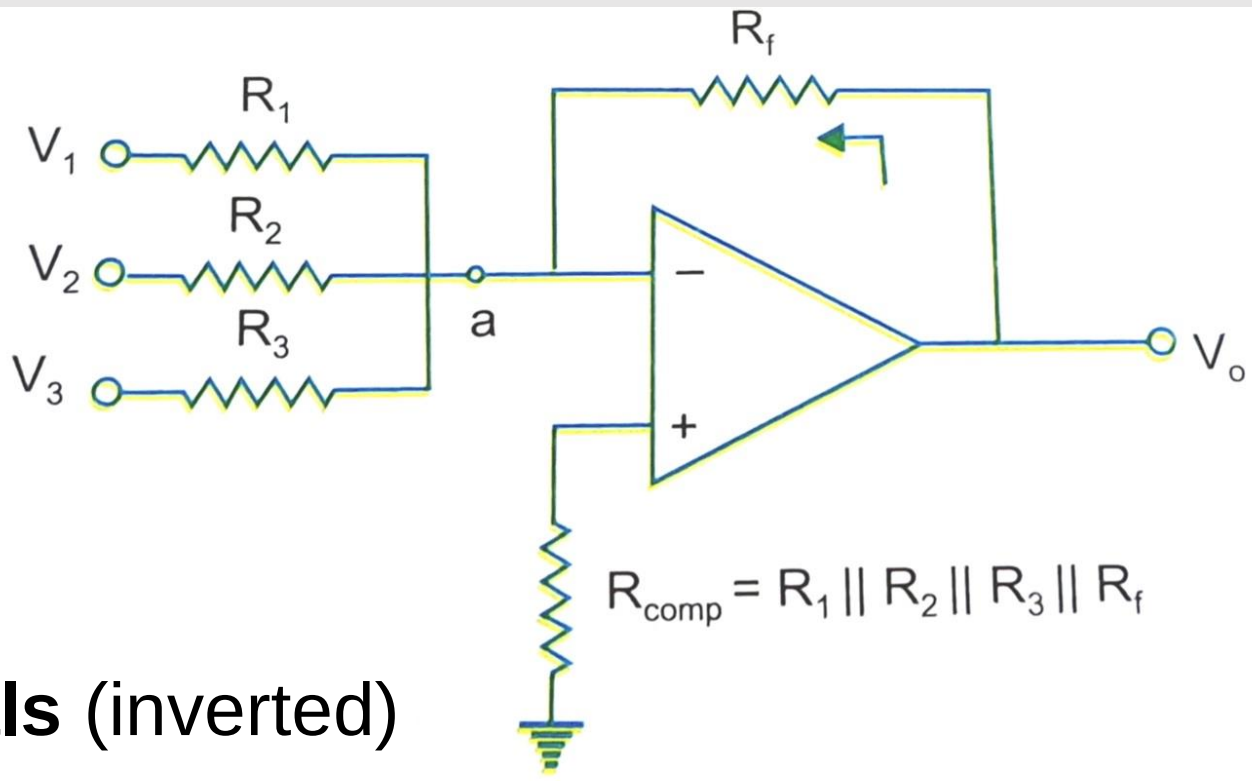

Fig. 4.2 (a) Inverting summing amplifier

2.1. Summing amplifier: **Inverting summing amplifier**

$$V_0 = -\left(\frac{R_f}{R_1}V_1 + \frac{R_f}{R_2}V_2 + \frac{R_f}{R_3}V_3\right)$$

<u>Practical case</u>:

Compensation should be provided.

Make all voltage inputs as zero:

$R_i = R_1 \parallel R_2 \parallel R_3$ (effective input resistance)

$$R_{comp} = \mathrm{R_i} \parallel R_f$$
$$= R_1 \parallel R_2 \parallel R_3 \parallel R_f$$

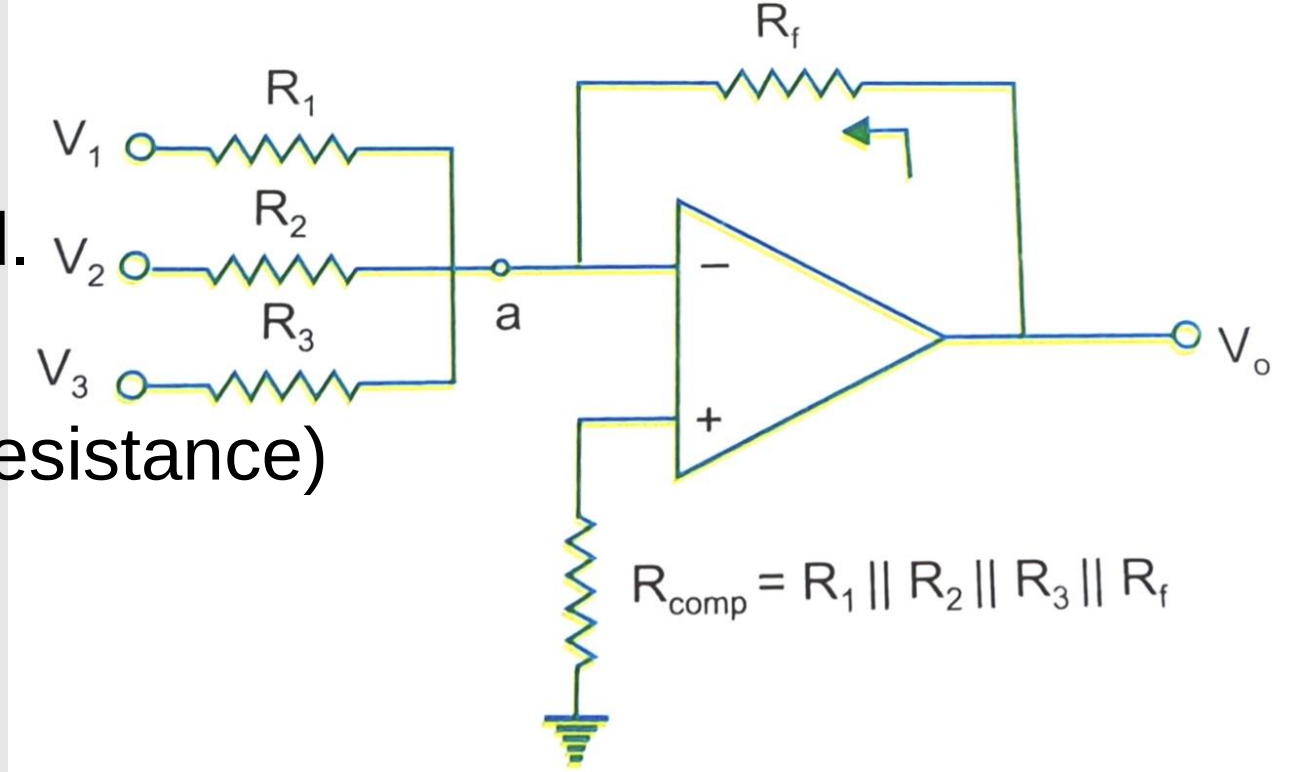

Fig. 4.2 (a) Inverting summing amplifier

2.2. Summing amplifier: **Non-Inverting summing amplifier**

Summer that gives non inverted sum

- Let voltage at $(-)$ inverting terminal be V_a

Then Voltage at $(+)$ non inverting terminal is V_a

- KCL at a: $I_{ba} + I_{ca} + I_{da} = 0$
- $$\frac{V_1 - V_a}{R_1} + \frac{V_2 - V_a}{R_2} + \frac{V_3 - V_a}{R_3} = 0$$
- $$\frac{V_1}{R_1} + \frac{V_2}{R_2} + \frac{V_3}{R_3} = V_a\left(\frac{1}{R_1} + \frac{1}{R_2} + \frac{1}{R_3}\right)$$
- $$V_a = \frac{\frac{V_1}{R_1} + \frac{V_2}{R_2} + \frac{V_3}{R_3}}{\left(\frac{1}{R_1} + \frac{1}{R_2} + \frac{1}{R_3}\right)}$$

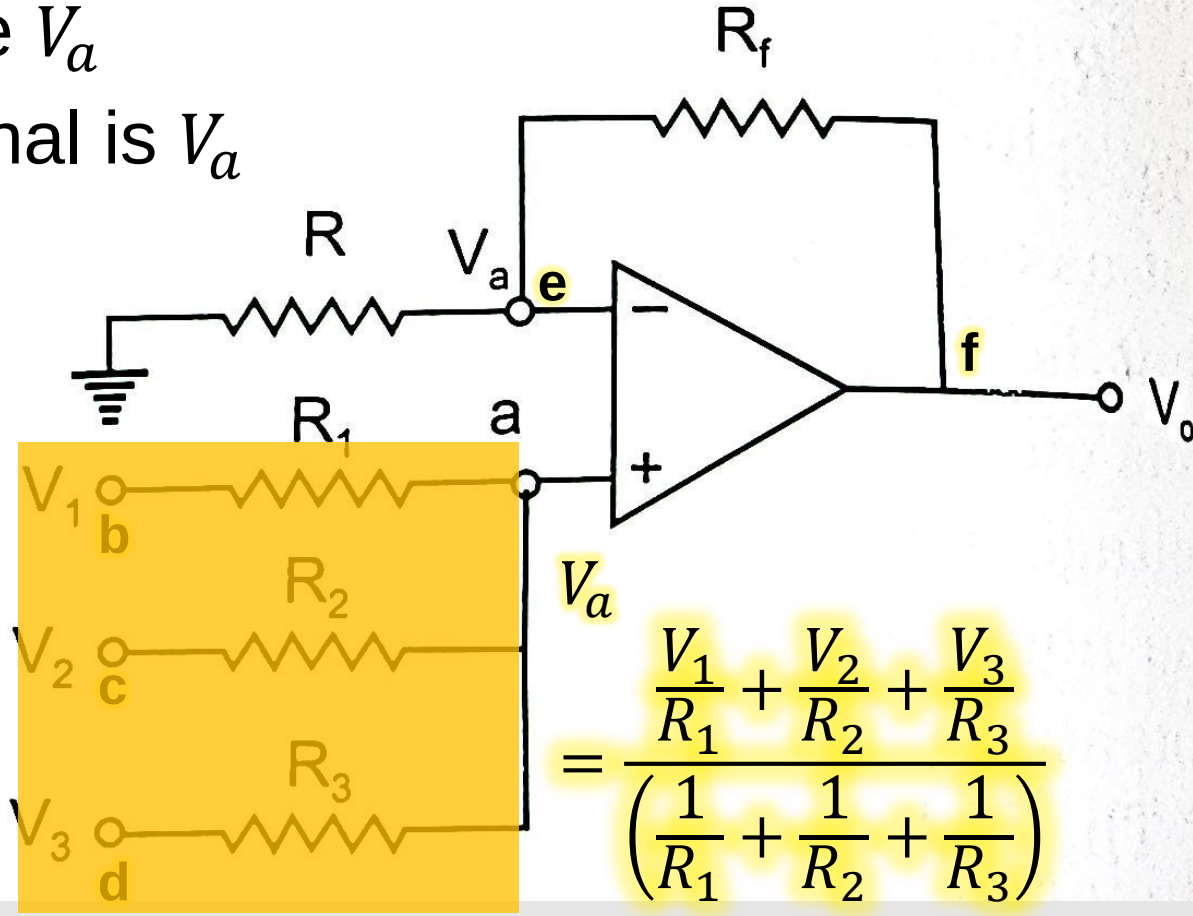

$$= \frac{\frac{V_1}{R_1} + \frac{V_2}{R_2} + \frac{V_3}{R_3}}{\left(\frac{1}{R_1} + \frac{1}{R_2} + \frac{1}{R_3}\right)}$$

2.2. Summing amplifier: **Non-Inverting summing amplifier**

Summer that gives non inverted sum

- We can look at the circuit as normal non-inverting amplifier with input voltage at non-inverting terminal as V_a
- Hence: $\frac{V_0}{V_a} = 1 + \frac{R_f}{R}$
  (To arrive at this, may apply KCL at e (-))
- $V_0 = \left(1 + \frac{R_f}{R}\right) \frac{\frac{V_1}{R_1} + \frac{V_2}{R_2} + \frac{V_3}{R_3}}{\left(\frac{1}{R_1} + \frac{1}{R_2} + \frac{1}{R_3}\right)}$
- This is non-inverted weighted sum of inputs

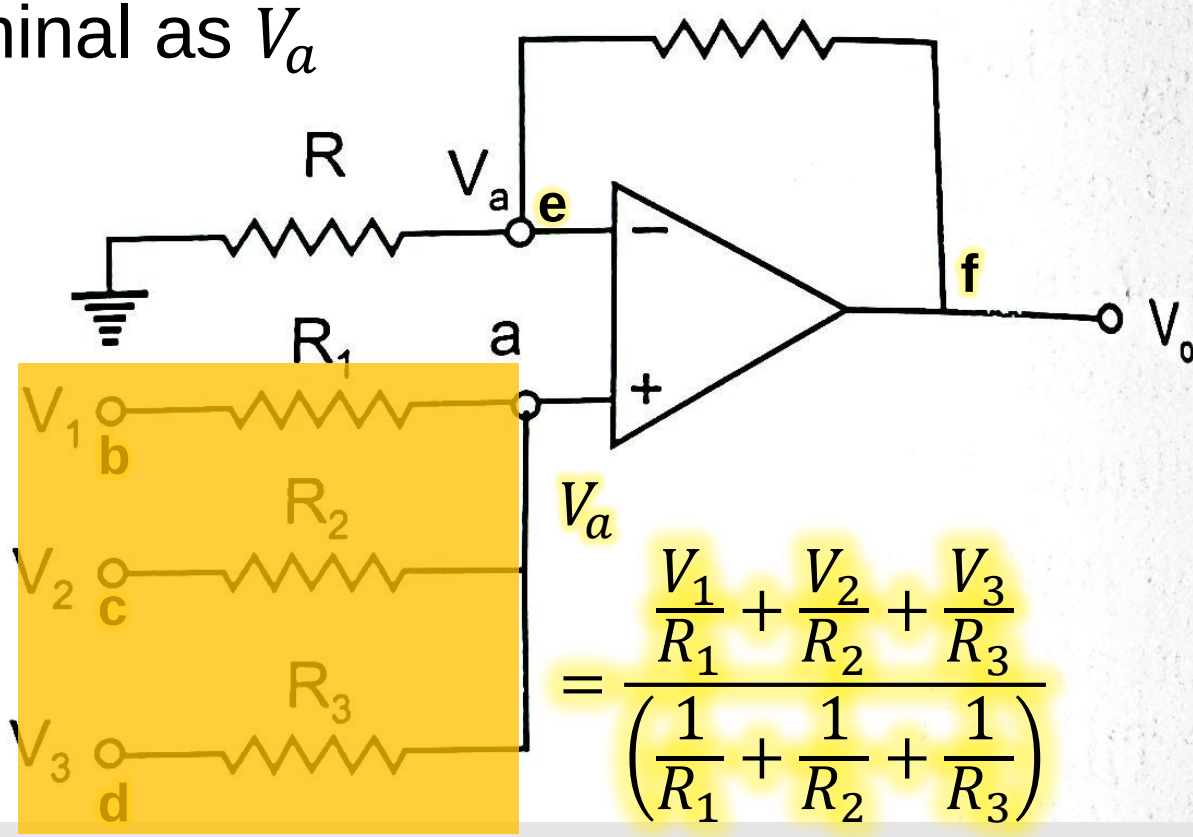

$$= \frac{\frac{V_1}{R_1} + \frac{V_2}{R_2} + \frac{V_3}{R_3}}{\left(\frac{1}{R_1} + \frac{1}{R_2} + \frac{1}{R_3}\right)}$$

2.2. Summing amplifier: **Non-Inverting summing amplifier**

- $V_0 = \left(1 + \frac{R_f}{R}\right) \frac{\frac{V_1}{R_1} + \frac{V_2}{R_2} + \frac{V_3}{R_3}}{\left(\frac{1}{R_1} + \frac{1}{R_2} + \frac{1}{R_3}\right)}$
- **<u>Special case</u>**: $R_1 = R_2 = R_3 = R = \frac{R_f}{2}$
- $V_0 = \left(1 + \frac{2R}{R}\right) \frac{\frac{V_1}{R_1} + \frac{V_2}{R_2} + \frac{V_3}{R_3}}{\left(\frac{1}{R_1} + \frac{1}{R_2} + \frac{1}{R_3}\right)}$
- $V_0 = V_1 + V_2 + V_3$
- **The output voltage is the sum of the input voltages**

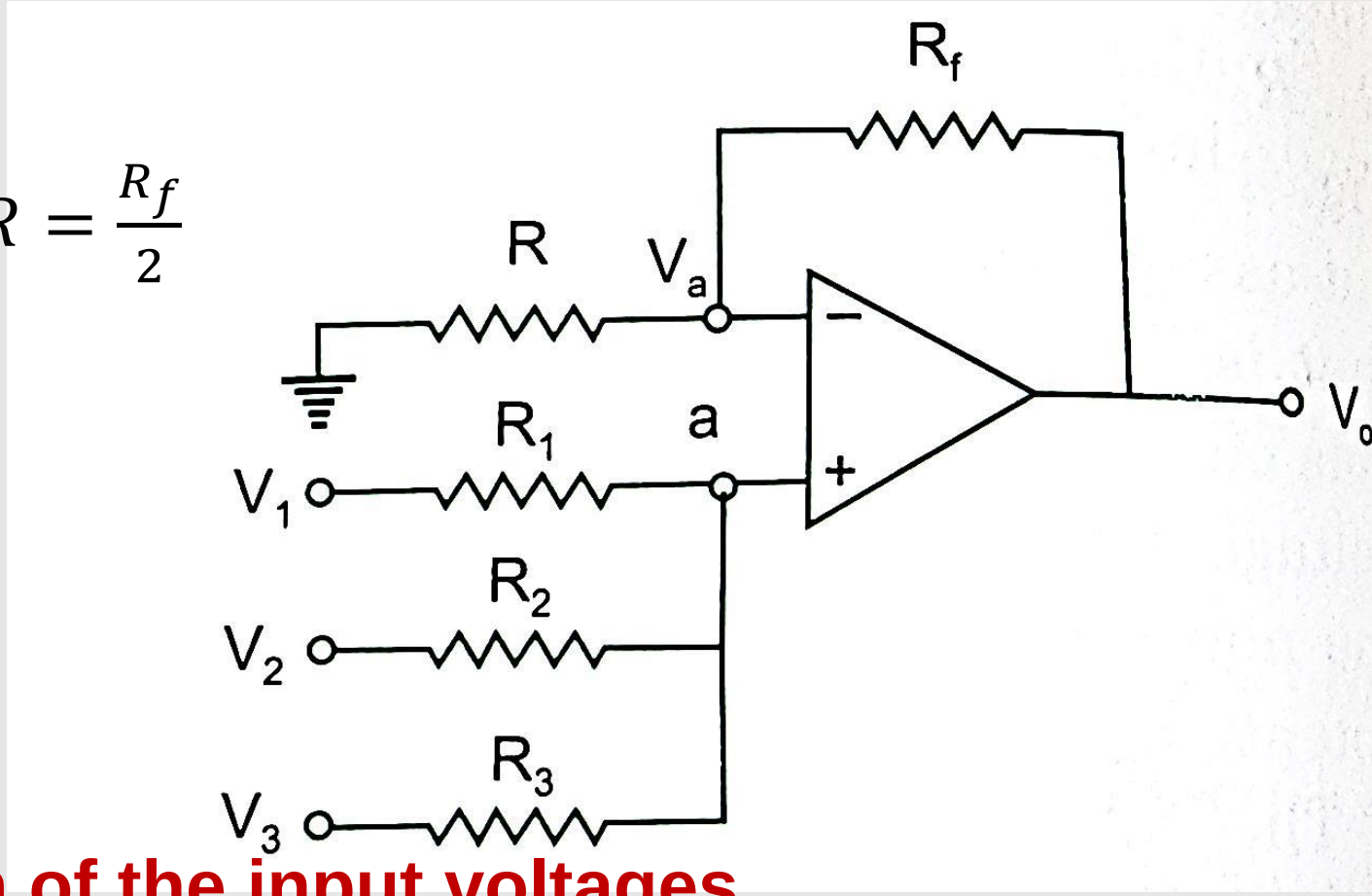

Instrumentational amplifier

- An instrumentation amplifier is a device that amplifies the difference between the voltages at its two input terminals and hence known as differential voltage gain amplifier.

- This amplifier can be used for accurate and low signal amplification of signals with the common mode input.

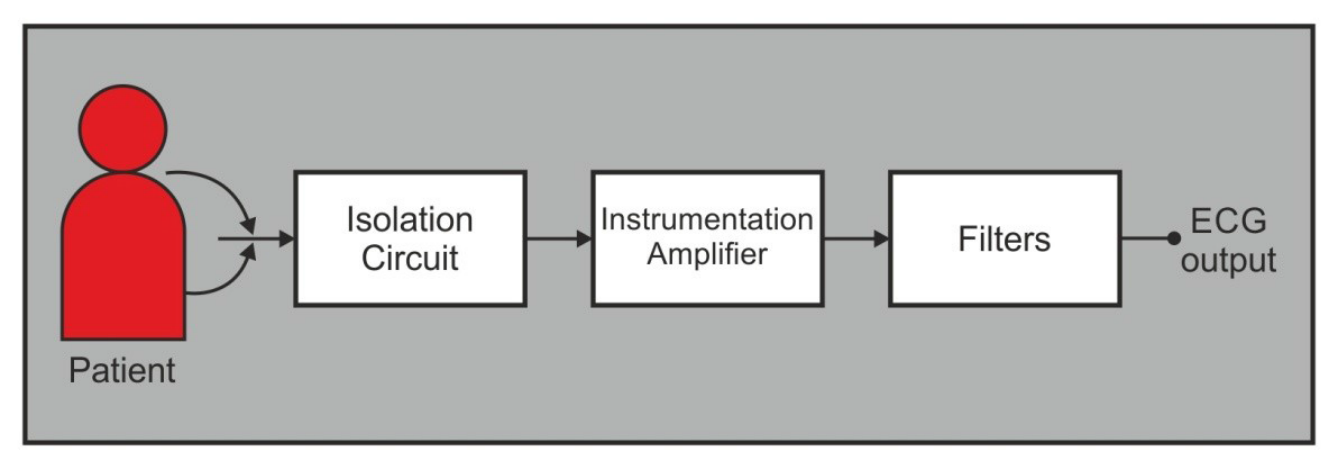

Instrumentation Amplifier in ECG Measurement

One good example is human physiological signal measurement.

The ECG signal measurement devices use instrumentation amplifiers to pick up the low level output signal from the human heart

Instrumentational amplifier

- For measure and control of parameters like temperature, humidity, light intensity, water flow, the output of transducer has to be amplified
  so that amplified output can drive the indicator or display system
- **Instrumentational amplifier** does this amplification with the features:
  a) High gain accuracy
  b) High CMRR
  c) High gain stability with low temperature coefficient
  d) low dc offset
  e) low output impedance

A transducer is a device that converts energy from one form to another

Instrumentational amplifier

Stage 1: Buffer stage

Stage 2: Differential Amplifier stage

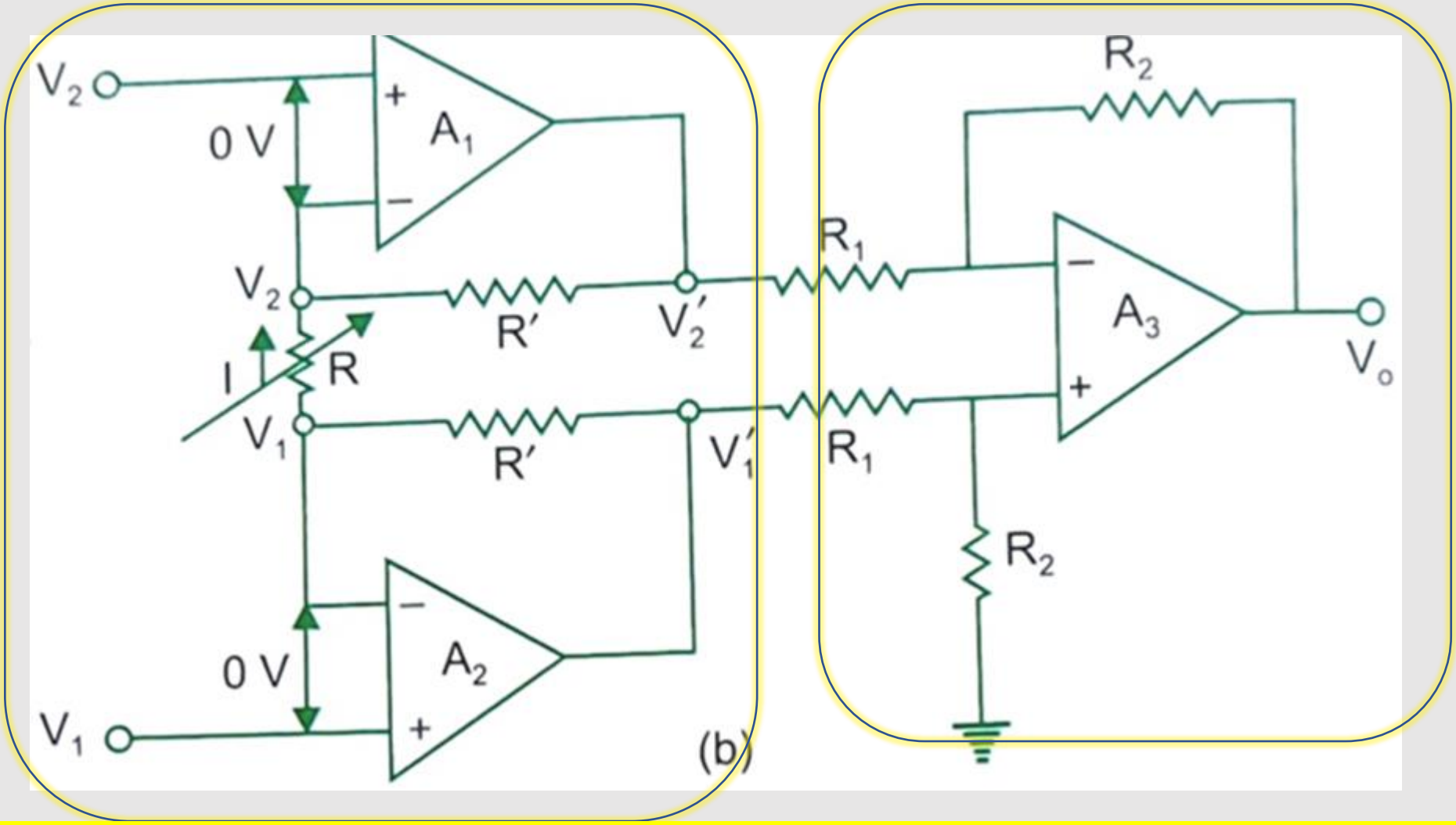

The gain of the circuit can be adjusted by connecting the external gain setting resistor R"

1. Instrumentational amplifier

- $Improved\ instrumentational\ amplifier: Buffer\ stages$:
- <u>When common mode input</u>: $V_1 = V_2$:
  the $V_2 - V_1 = 0$ (Across R)
  No current through R, and R',
  so A_1 and A_2 will be voltage followers.
- <u>When diff mode input</u>: $V_1 \neq V_2$:
  Current flows through R, R'
- The differential gain and CMRR

Will therefore be more than single stage

Improved instrumentational amp

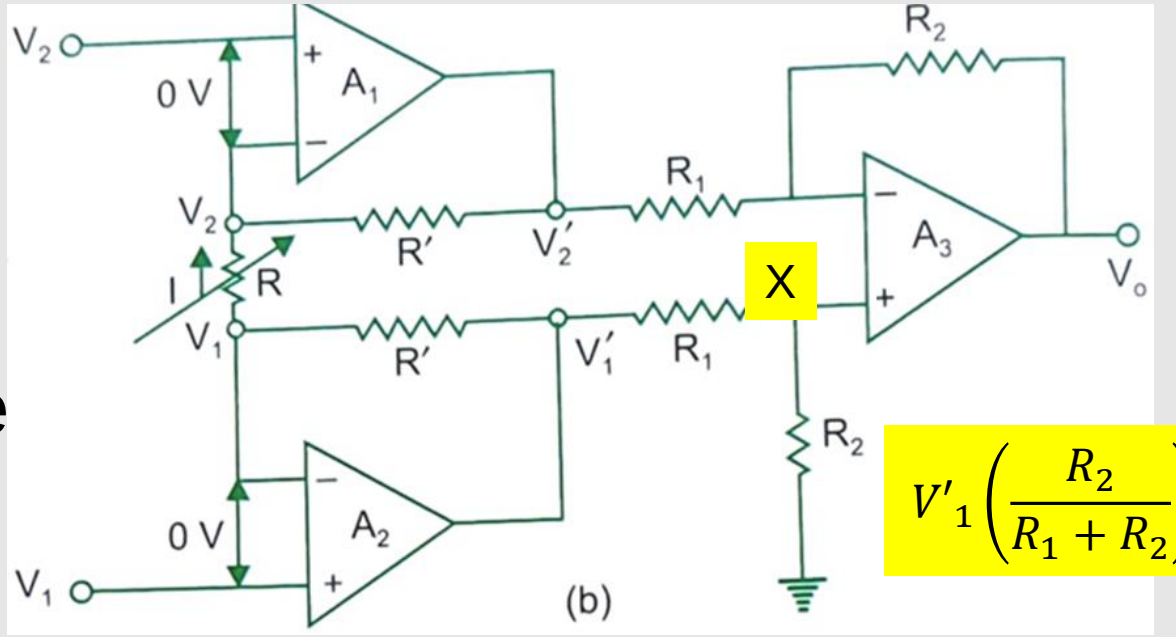

$$V'_1\left(\frac{R_2}{R_1 + R_2}\right)$$

1. Instrumentational amplifier

- For the differential amplifier given,
- $V_0 = -\frac{R_2}{R_1}V'_2 + V'_1\left(\frac{R_2}{R_2+R_2}\right)\left(1+\frac{R_2}{R_1}\right)$

  $= -\frac{R_2}{R_1}\left[V'_2 - V'_1\left(\frac{R_2}{R_1+R_2}\right)\left(\frac{R_1}{R_2}+1\right)\right]$
- $V_o = \frac{R_2}{R_1}(V'_1 - V'_2)$

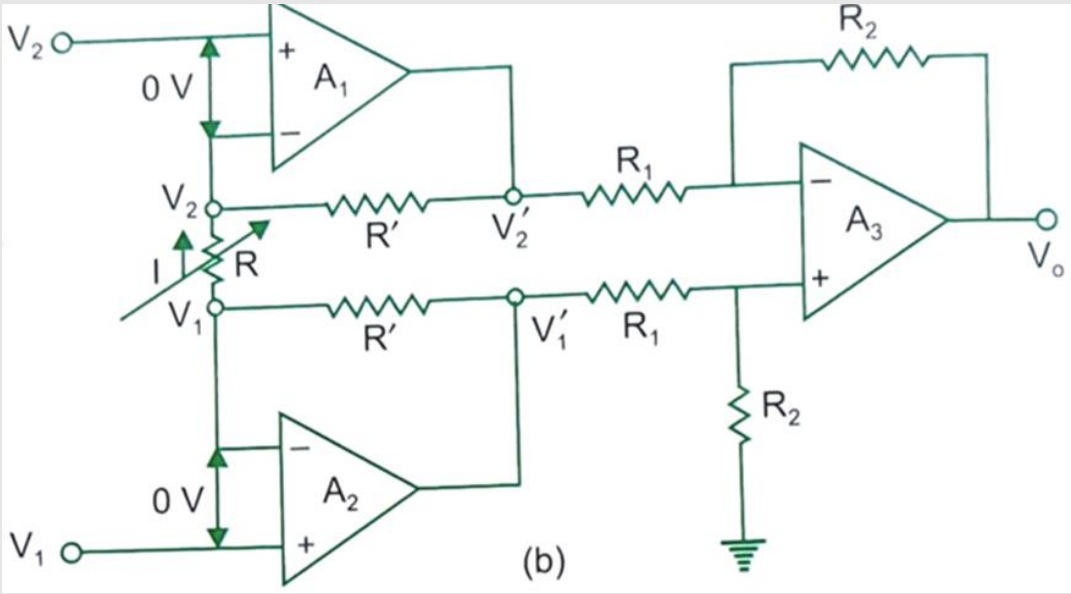

- Input impedance seen by V_1: $R_3 + R_4 = 101k\Omega$
- Input impedance seen by V_2: $R_1 = 1k\Omega$
- May draw heavy current and cause loading at V_2
  To prevent this use high impedance buffer stage

1. Instrumentational amplifier

- $Improved\ instrumentational\ amplifier: Buffer\ stages$:
- Upward flowing Current through R:
  $I = (V_1 - V_2)/R$
- $V_1' = V_1 + IR' = \frac{R'}{R}(V_1 - V_2) + V_1$
  $V_2' = V_2 - IR' = -\frac{R'}{R}(V_1 - V_2) + V_2$
- As before, for diff-amp:

$$V_0 = -\frac{R_2}{R_1}V_2' + V_1'\left(\frac{R_4}{R_3+R_4}\right)\left(1 + \frac{R_2}{R_1}\right)$$
$$= -\frac{R_2}{R_1}\left[V_2' - V_1'\left(\frac{R_4}{R_3+R_4}\right)\left(\frac{R_1}{R_2} + 1\right)\right]$$

WKT

$$V_o = \frac{R_2}{R_1}(V_1' - V_2')$$

Improved instrumentational amp

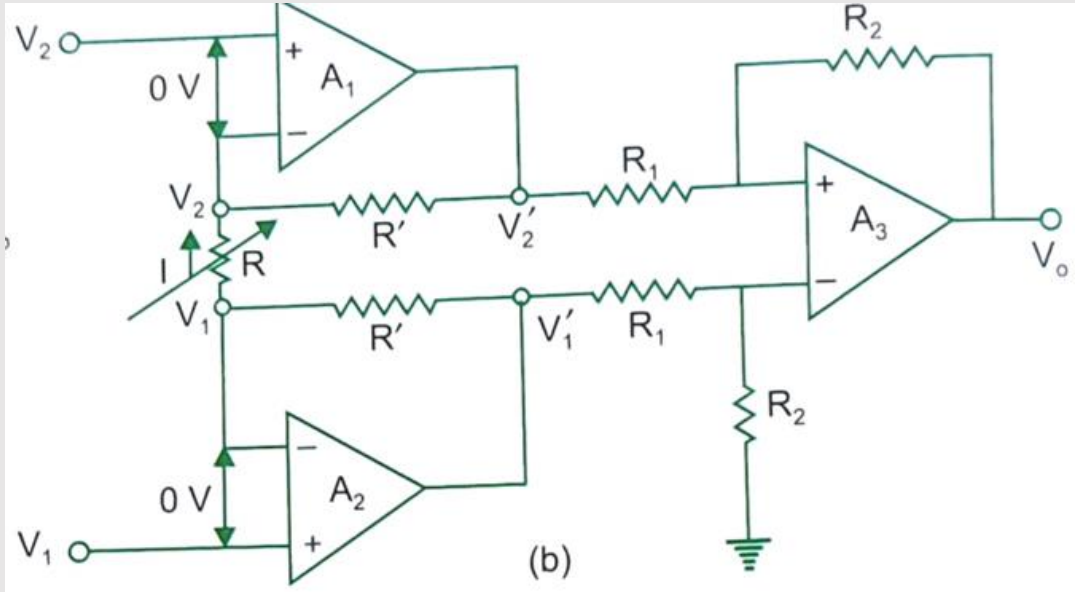

1. Instrumentational amplifier

$$V_o = \frac{R_2}{R_1}(V_1' - V_2')$$

$$V_o = \frac{R_2}{R_1}\left(\frac{R'}{R}(V_1 - V_2) + V_1 - \left(-\frac{R'}{R}(V_1 - V_2) + V_2\right)\right)$$

$$V_o = \frac{R_2}{R_1}\left(\frac{R'}{R}(V_1 - V_2) + V_1 + \frac{R'}{R}(V_1 - V_2) - V_2\right)$$

- $V_0 = \frac{R_2}{R_1}\left[\left(1 + \frac{2R'}{R}\right)(V_1 - V_2)\right]$
- $Gain = \frac{V_o}{V_1 - V_2} = \frac{R_2}{R_1}\left(1 + \frac{2R'}{R}\right)$

Improved instrumentational amp

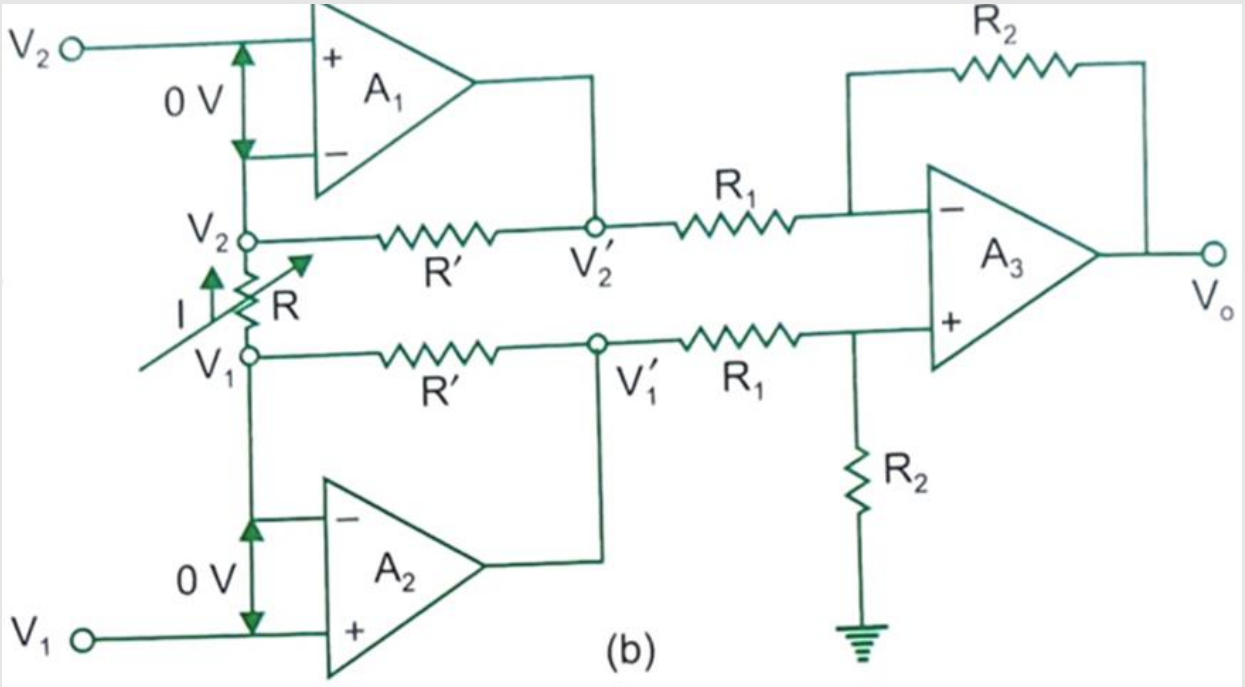

Voltage to current convertor – floating load

- Used for low voltage dc and ac voltmeter, LED, zener diode tester
- $v_i = V_a = i_L R_1 \qquad (I_B^- = 0)$
- $i_L = v_i / R_1$
- Input voltage is converted to output current

Voltage to current convertor – floating load

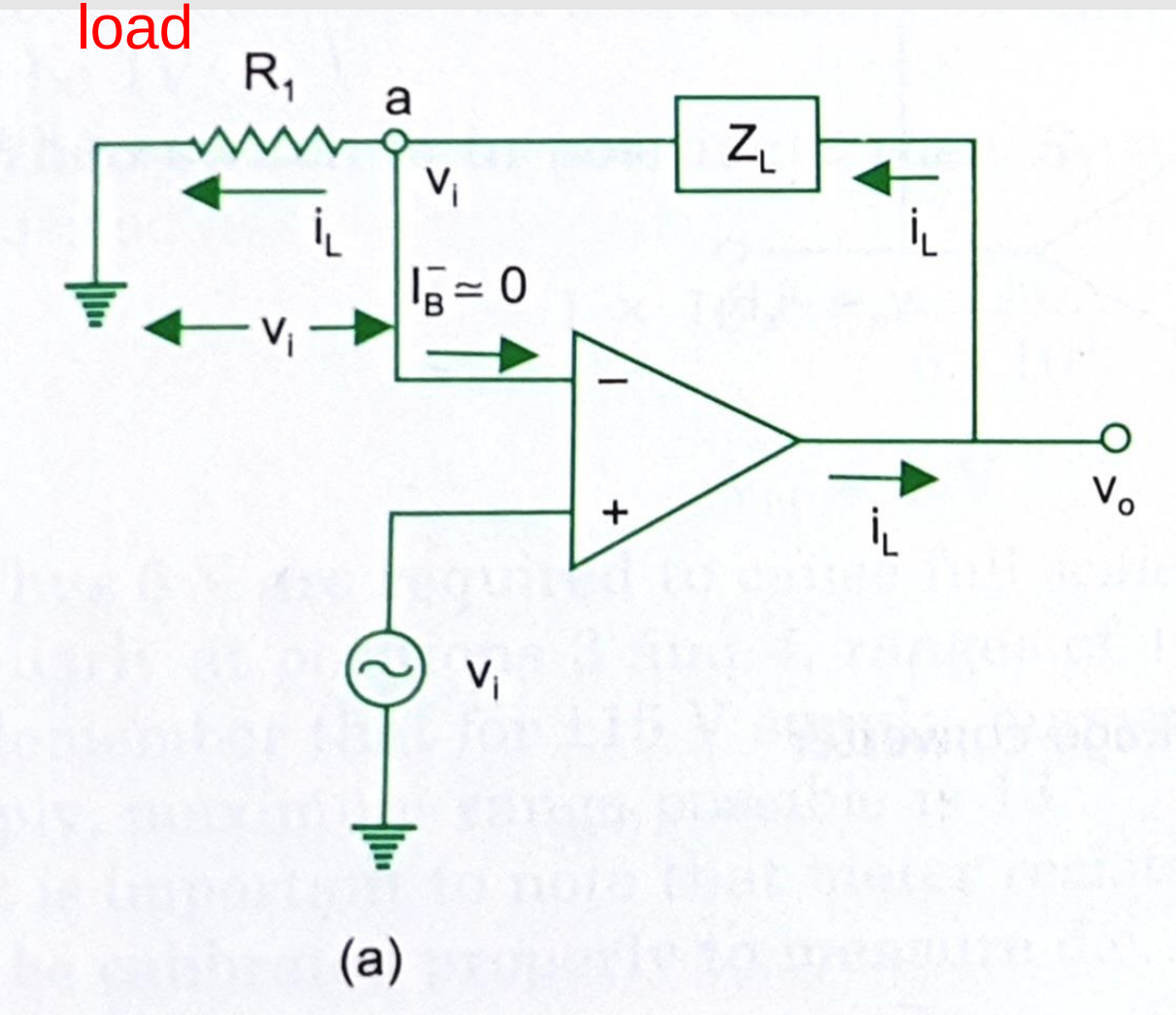

Voltage to current convertor – grounded load

- For $V_a = v_1$ being node voltage at (+), KCL:
- $i_1 + i_2 = i_L$
- $\frac{(v_i - v_1)}{R} + \frac{(v_0 - v_1)}{R} = i_L$
- $v_1 = \frac{v_i - v_o - i_L R}{2}$
- Non-inverting op-amp: Gain$= 1 + \frac{R}{R} = 2$
- $v_o = gain.v_1 = 2v_1 = v_i + v_0 - i_L R$
- Here also $v_i = i_L R$: $\quad i_L = v_i / R$

Voltage to current convertor – grounded load

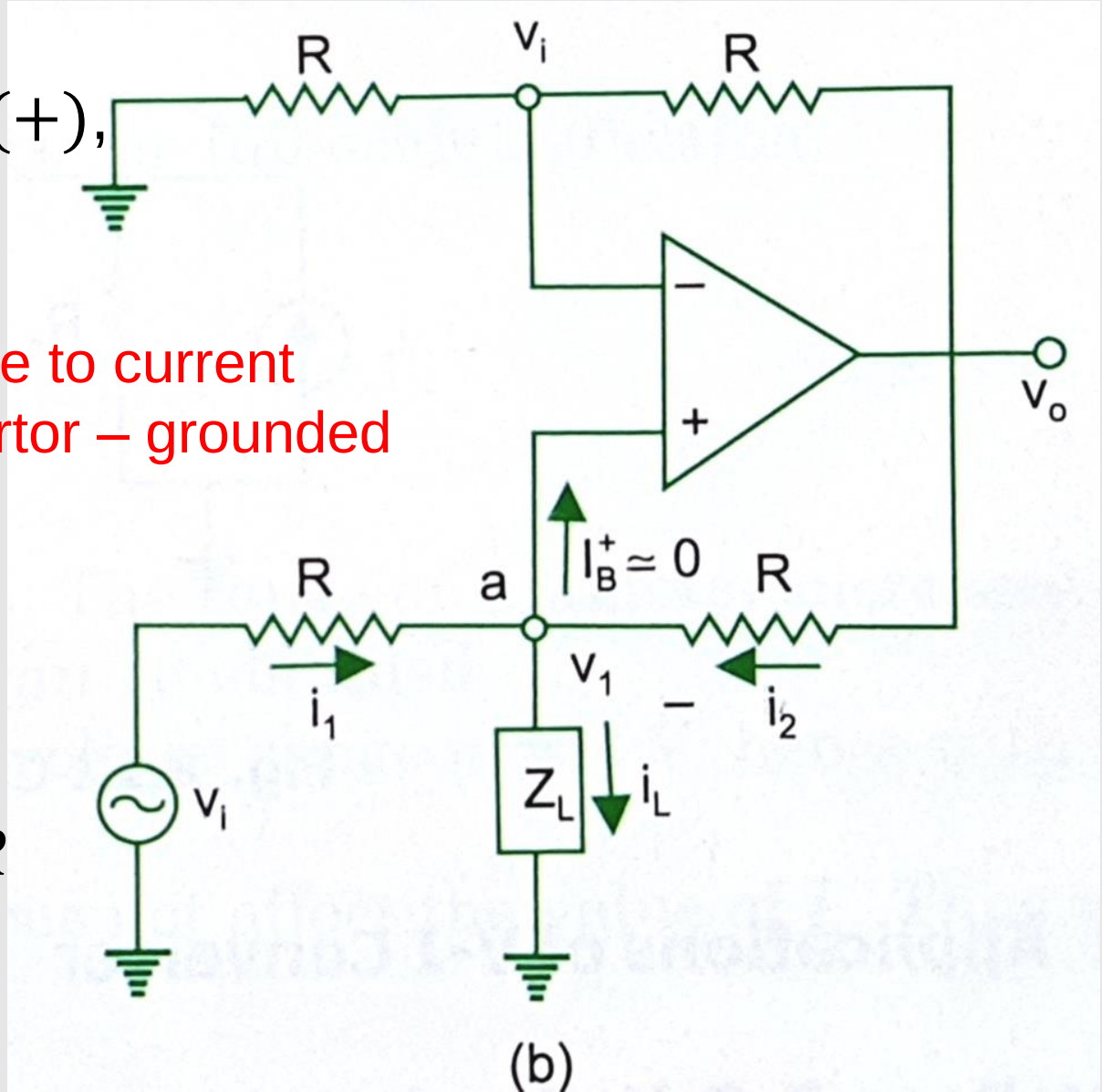

Current to Voltage to convertor (Trans-resistance amplifier)

- Photocell, photodiode, photovoltaic cell gives output current proportional to incident radiant energy or light.
- Current can be converted to voltage to store/use energy
- (-) in virtual ground, no current through R_s.
- Hence i_s flows through R_f (feedback)
- $v_o = -i_S R_f$
- To reduce high frequency noise, C_f is used in parallel to R_f

Current to Voltage to convertor

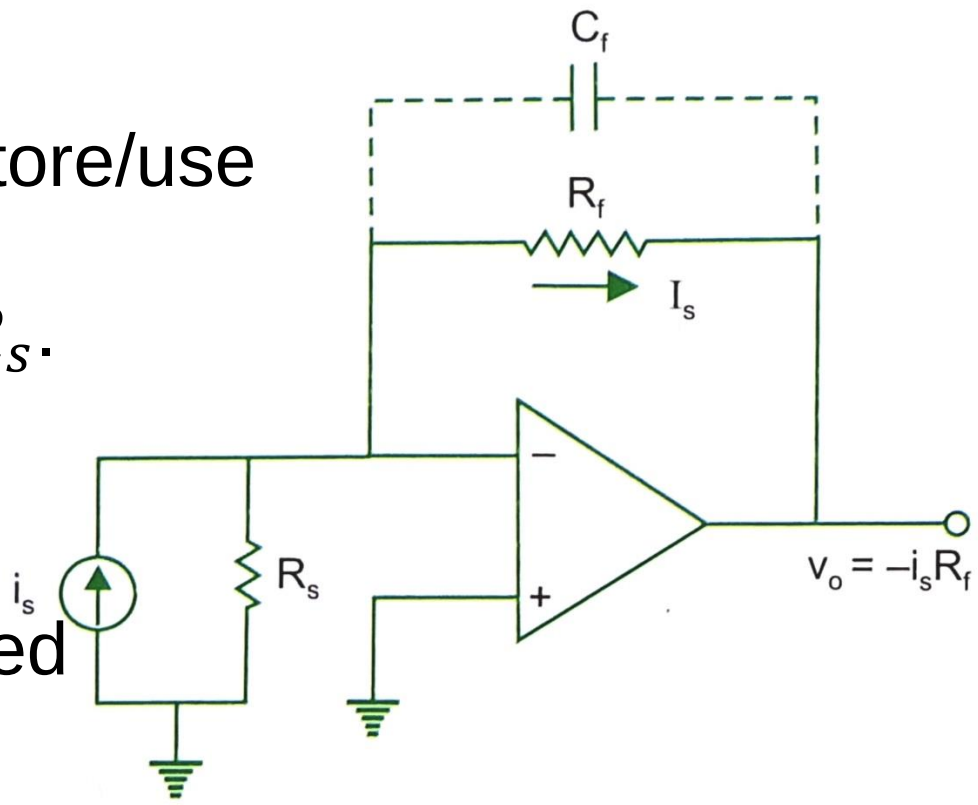

Fig. 4.12 Current to voltage converter

Subtractor

Subractor or Difference amplifier

Output Voltage is proportional to (difference between the two signal) subtraction of the input signal

3. Subtractor

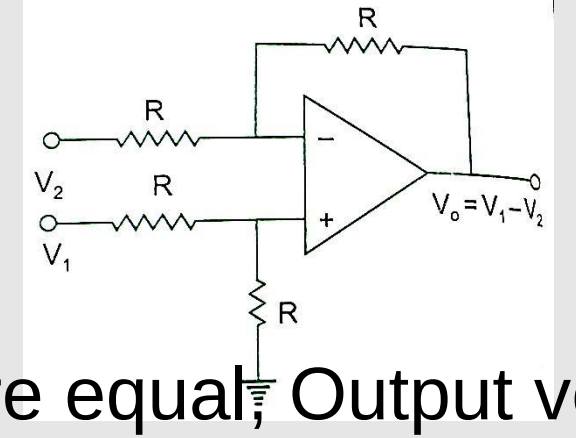

- For the given circuit:
  When all resistors are equal, Output voltage can be obtained by superposition principle:
- V_{01}: Output due to V_1 only: Make $V_2 = 0$

$$V_a = V_1\left(\frac{R}{R+R}\right) = \frac{V_1}{2}$$

The circuit is now like a non-inverting amplifier with V_a as input to (+)

$$V_{01} = V_a\left(1 + \frac{R_f}{R}\right) = \left(\frac{V_1}{2}\right)(1+1) = V_1$$

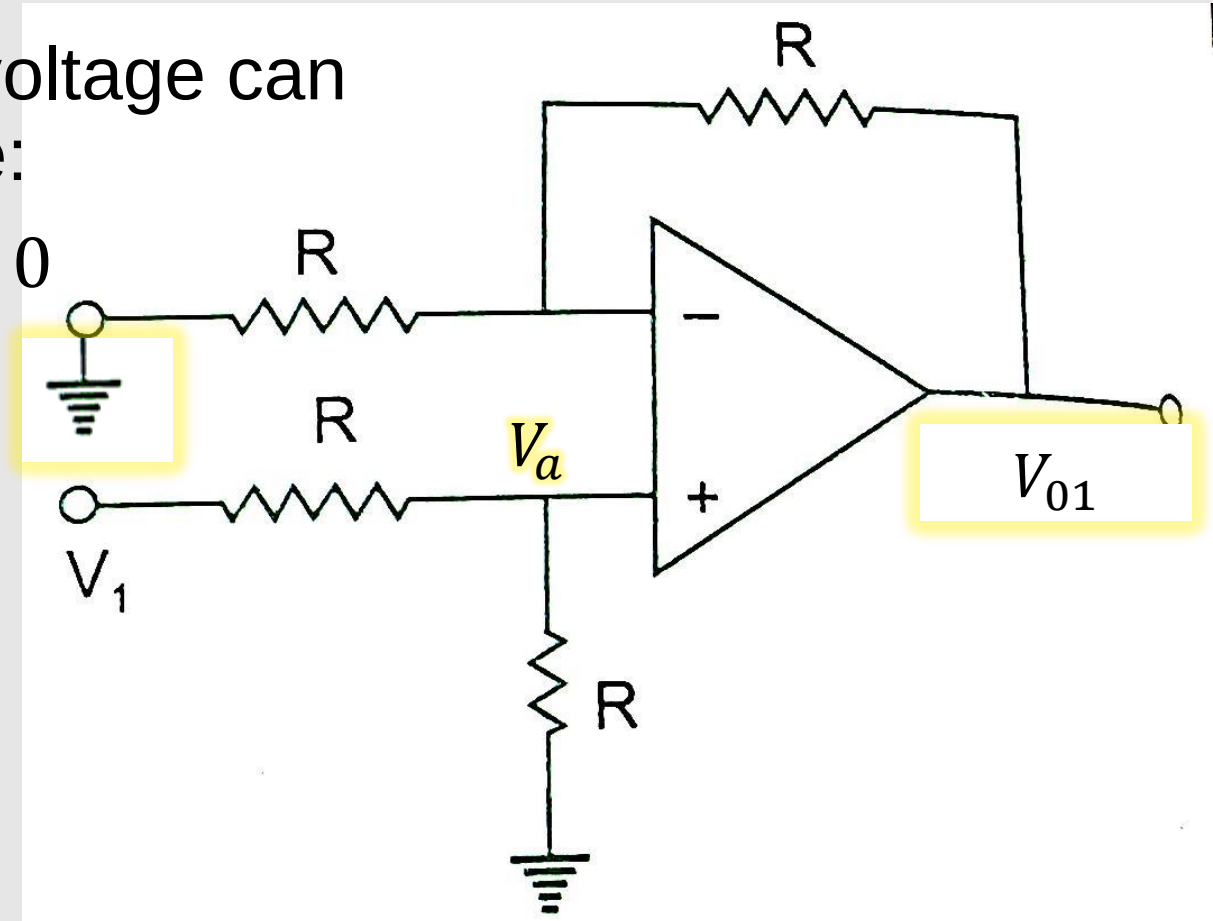

Fig. 4.3 (a) Op-amp as subtractor

3. Subtractor

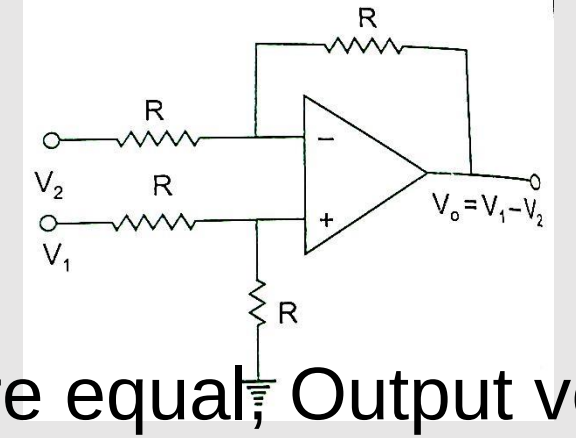

- For the given circuit:
  When all resistors are equal, Output voltage can be obtained by superposition principle:
- V_{02}: Output due to V_2 only: Make $V_1 = 0$

  $V_a = 0 = V_b$

  The circuit is now like inverting amplifier with V_2 as input through R to (-) inverting terminal

$$V_{02} = -V_2\left(\frac{R_f}{R}\right) = -V_2$$

Output due to V_1 only:

$V_{01} = V_1$

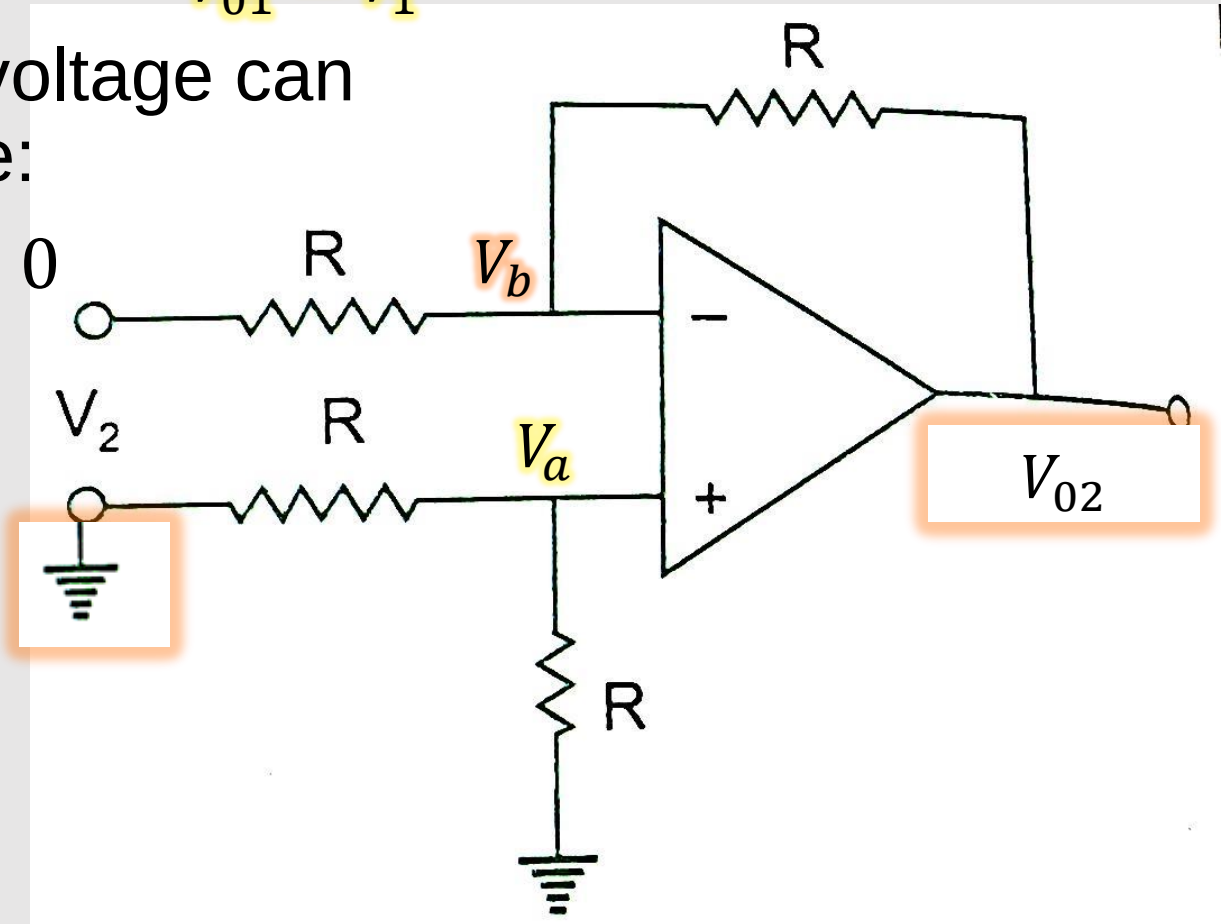

Fig. 4.3 (a) Op-amp as subtractor

3. Subtractor

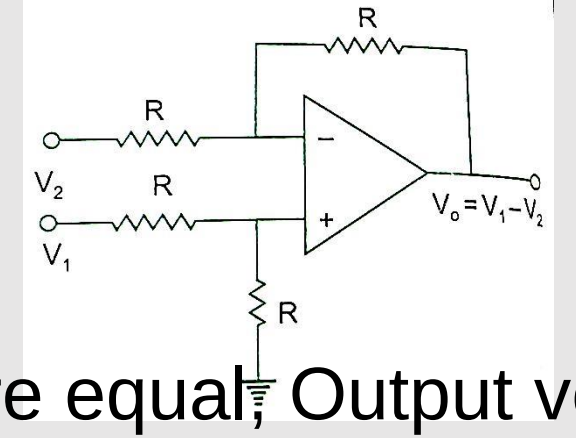

- For the given circuit:
  When all resistors are equal, Output voltage can be obtained by superposition principle:

- Output due to V_1 only: $V_{01} = V_1$
- Output due to V_2 only: $V_{02} = -V_2$
- $Superposition\ principle$:
- Output when both sources are present:
  $V_0 = V_{01} + V_{02} = V_1 - V_2$

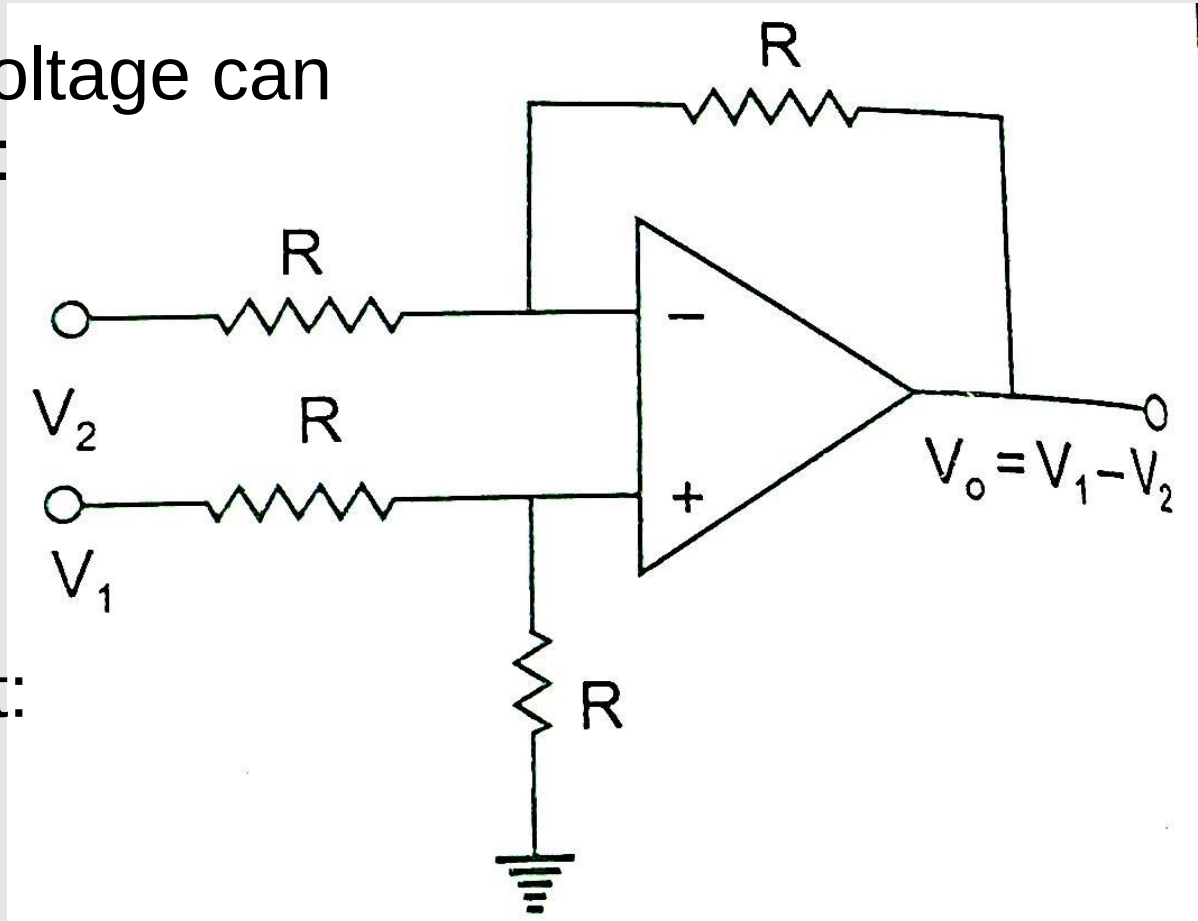

Fig. 4.3 (a) Op-amp as subtractor

Differentiator

One of the simplest of the **op-amp circuits that contain capacitor** is the differentiating amplifier of differentiator

Mathematical operation of **Differentiation**

The output waveform is the **derivative of input waveform**

Differentiator using an active device like op-amp is called an Active Differentiators.

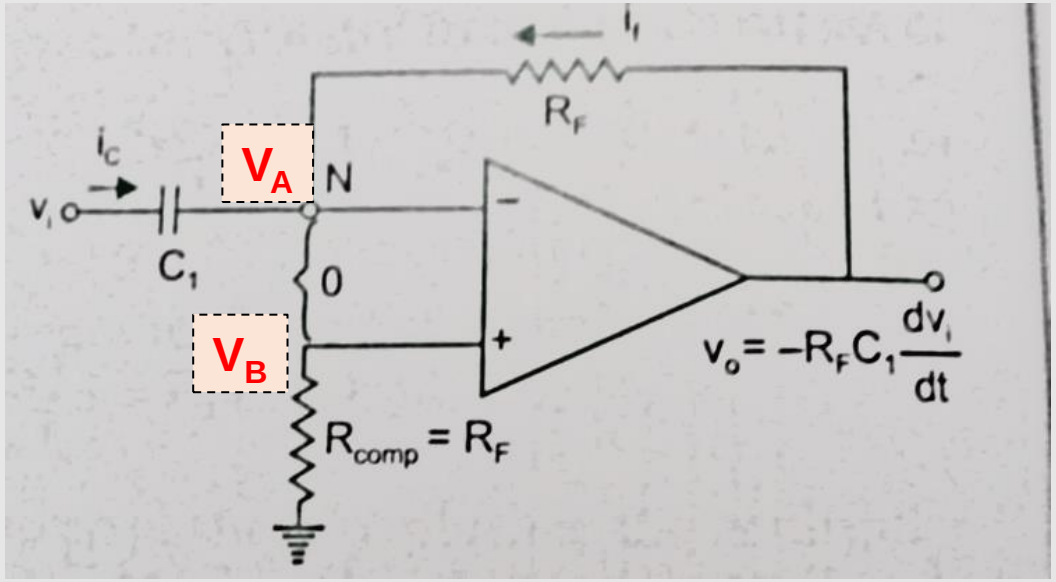

ASSUME

$V_A = V_B$

$V_A = 0$

$I_{in} = I_F$

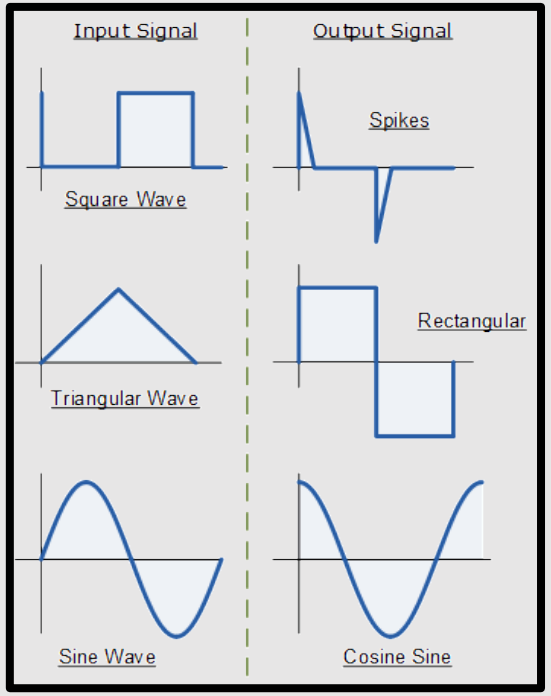

$$i_c + i_f = 0$$

$$C_1 \frac{d(V_i - V_N)}{dt} + \frac{V_0 - V_N}{R_F} = 0$$

$$WKT : V_N = 0$$

$$C_1 \frac{d(V_i)}{dt} + \frac{V_0}{R_F} = 0$$

$output$ derived as

$$\frac{V_0}{R_F} = -C_1 \frac{d(V_i)}{dt}$$

$$V_0 = -R_F C_1 \frac{d(V_i)}{dt}$$

V_o is the constant ($-R_F C_1$) times the derivative of the input voltage V_i

The minus sign indicates a 180 degree phase shift of the output waveform V_0 With respect to the input signal.

$$V_0 = -R_F C_1 \frac{d(V_i)}{dt}$$

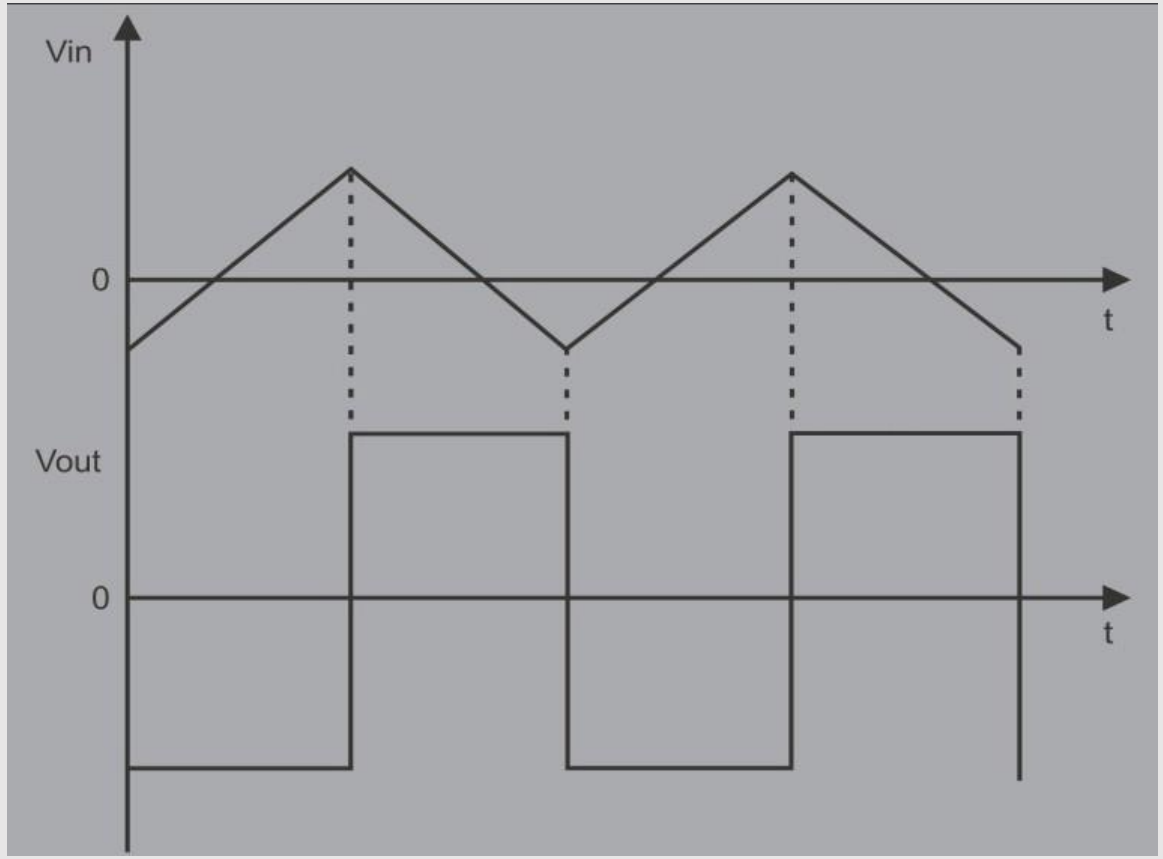

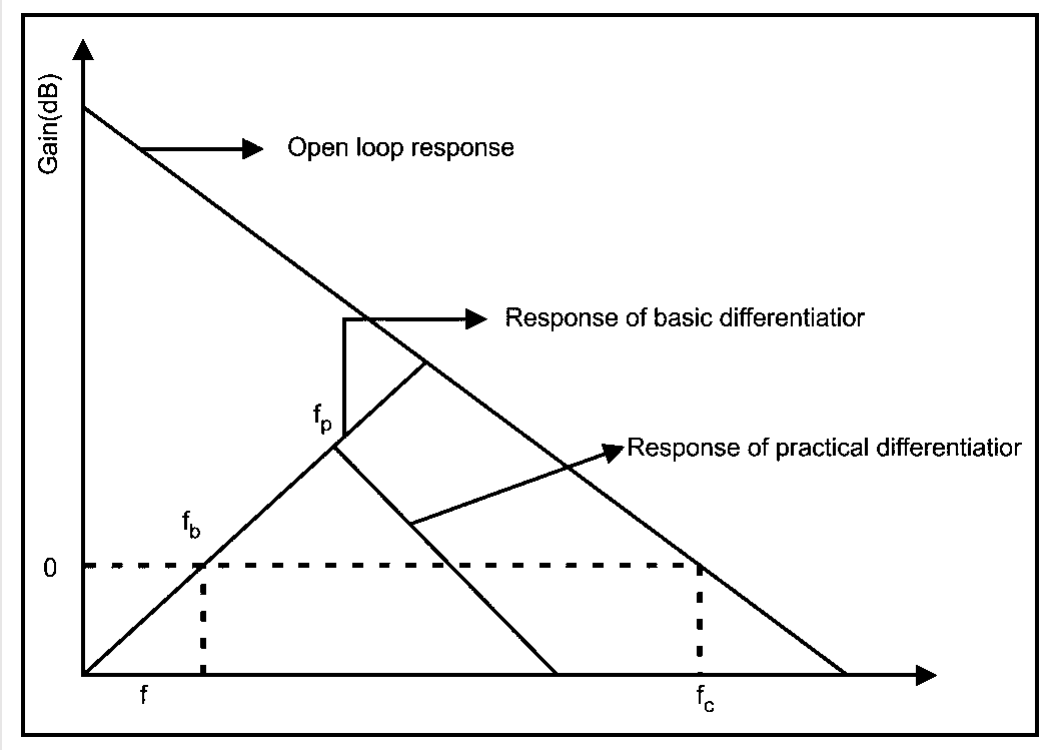

It is also clear that for the increase of frequency, the gain increases. Hence, the circuit is unstable.

at

$$f = f_b$$

$$f_b = \frac{1}{2\pi R_F C_1} \text{ at 0dB}$$

The gain increases between the frequencies f and fp. The change of gain is due to the combination of R_iC_i and R_fC_f. Therefore the gain limiting frequency f_p is

$$f = f_p$$

$$f_p = \frac{1}{2\pi R_1 C_1}$$

Practical

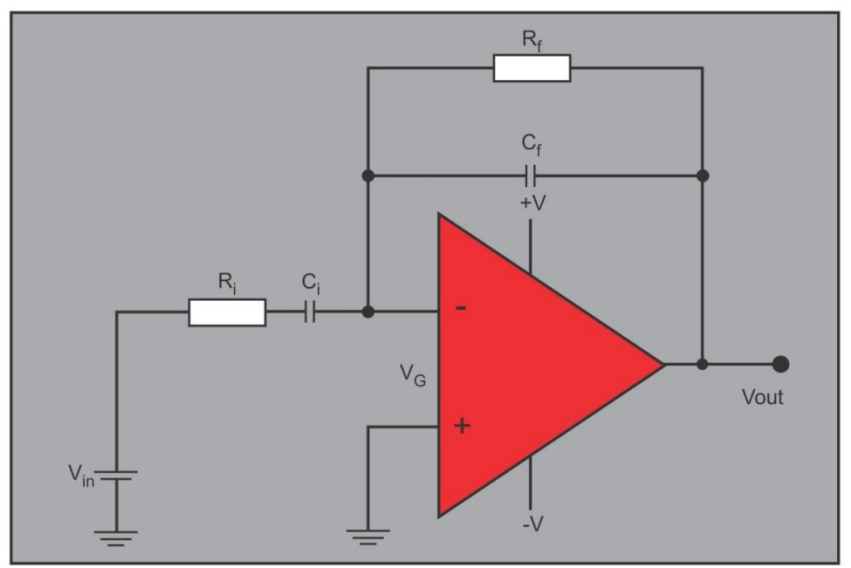

In practical differentiator, resistor Ri in the input path and capacitor Cf which is in parallel to the resistor
Rf in the feedback path are added as shown in the figure 3.14 to improve the stability as well as
remove the high frequency noise for decreasing input impedance with increasing frequency for ac
inputs

Integrator

Interchange the resistor and capacitor of the differentiator

Circuit with Capacitor

Perform the integration

Output is the integration of the Input signal

In a basic RC circuit, the capacitor is charged exponentially due to decreasing charging current.

But in the integrator circuit, the capacitor charging is constant due to the presence of an op-amp

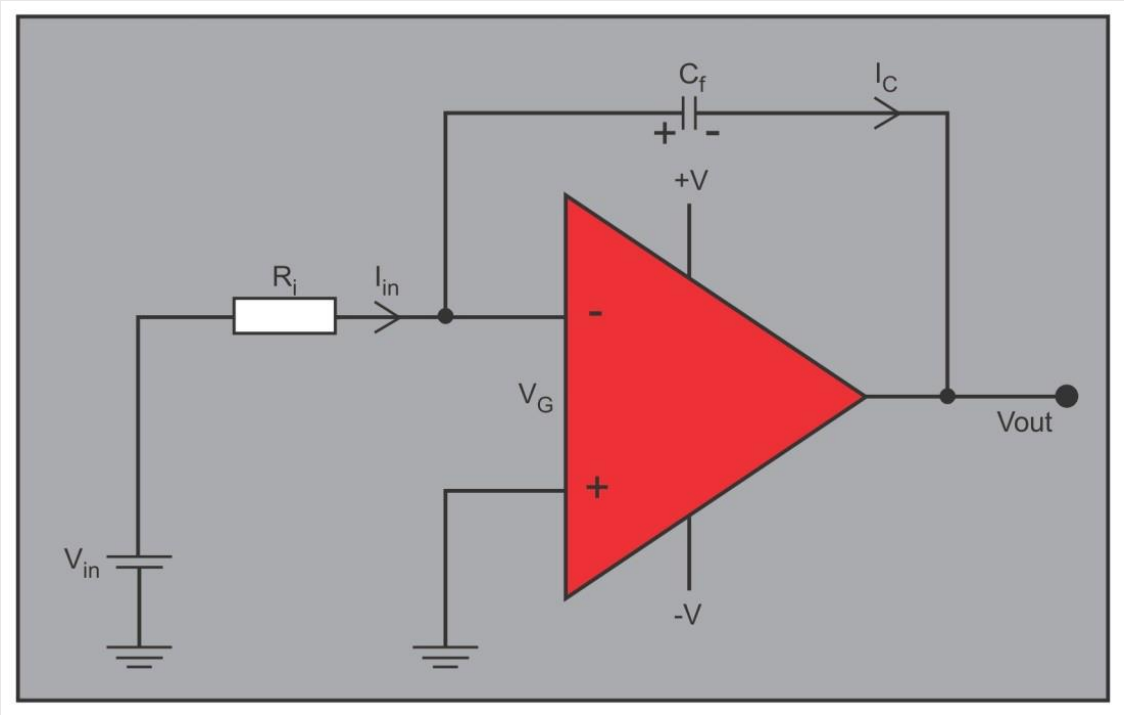

$$\frac{V_i}{R_i} = -C_F \frac{dV_{out}}{dt}$$

$$\frac{dV_{out}}{dt} = -\frac{1}{R_i C_F} V_i$$

$$dV_{out} = -\frac{1}{R_i C_F} V_i dt$$

$$\int_0^t dV_{out} = -\frac{1}{R_i C_F} \int_0^t V_i dt$$

$$V_{out} = -\frac{1}{R_i C_F} \int_0^t V_i dt + V_O(O)$$

shows that the output voltage V_0 is inversely proportional to time constant $Ri\ Cf$ and directly proportional to the negative integral of the input voltage Vin .

C is constant and is proportional to the output voltage V_0 at time t = 0s.

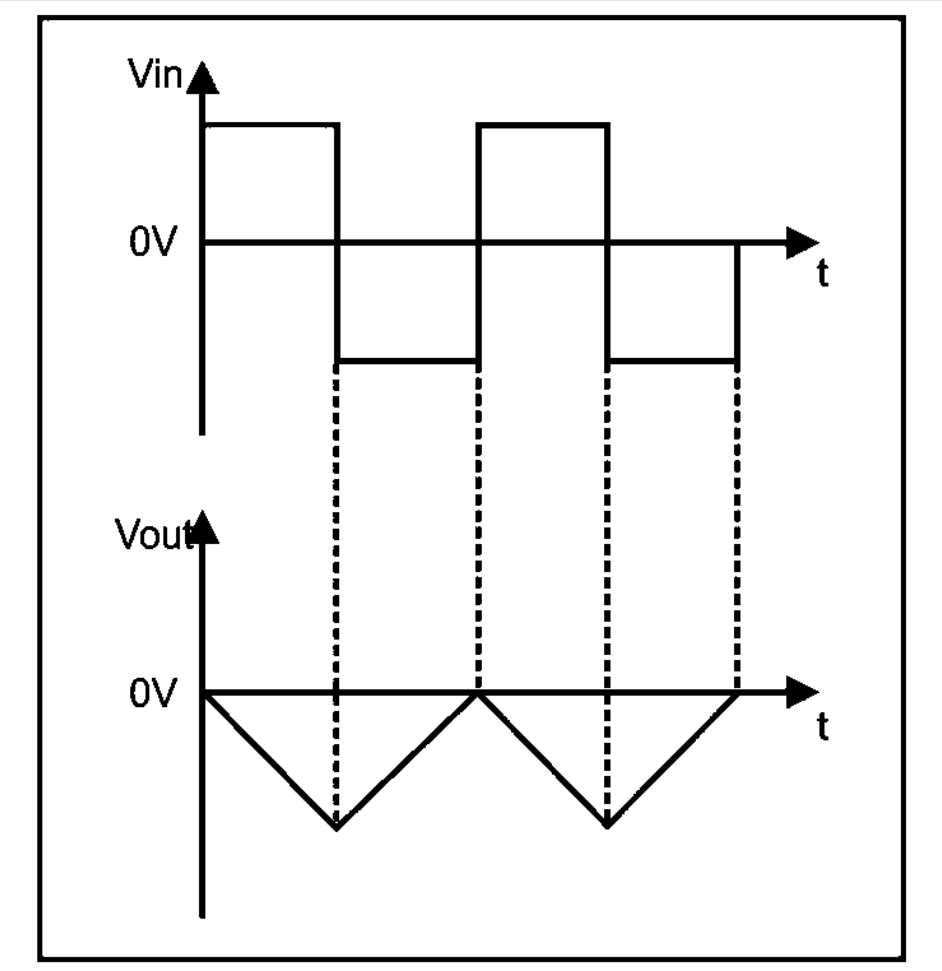

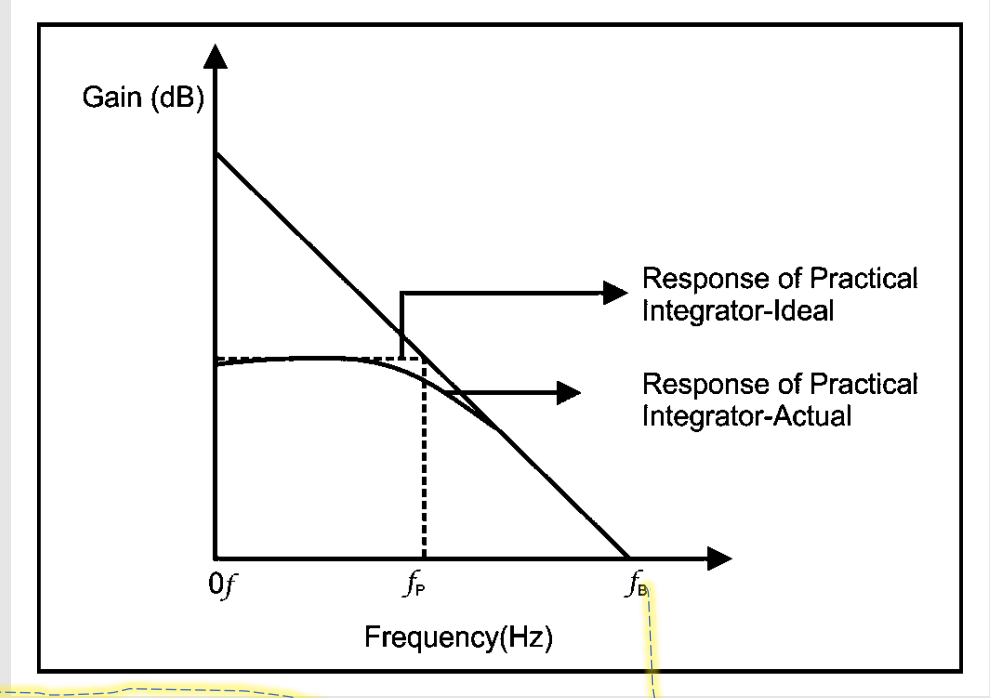

$$V_{out} = -\frac{1}{R_i C_F}\int_0^t V_i dt + V_O(O)$$

the gain of the integrator is almost saturated at low frequencies. But the gain decreases at high frequencie

the frequency response of basic integrator f_B is

$$f_B = \frac{1}{2\pi R i C_f} \text{ at gain of 0 db}$$

fp is also referred as gain limiting frequency and can be written as

$$f_P = \frac{1}{2\pi R_f C_f}$$

- Function generator is a device which produces sinusoidal, square, triangular waves etc to test the other electronic devices.
- Integrator is the **heart of the function generator** produces triangular wave. Along with the voltage comparator multivibrator, integrator produces square wave for the function generator. Along with the resistance diode network, integrator also produces sinusoidal waves. Integrator is also a part of PID controller.

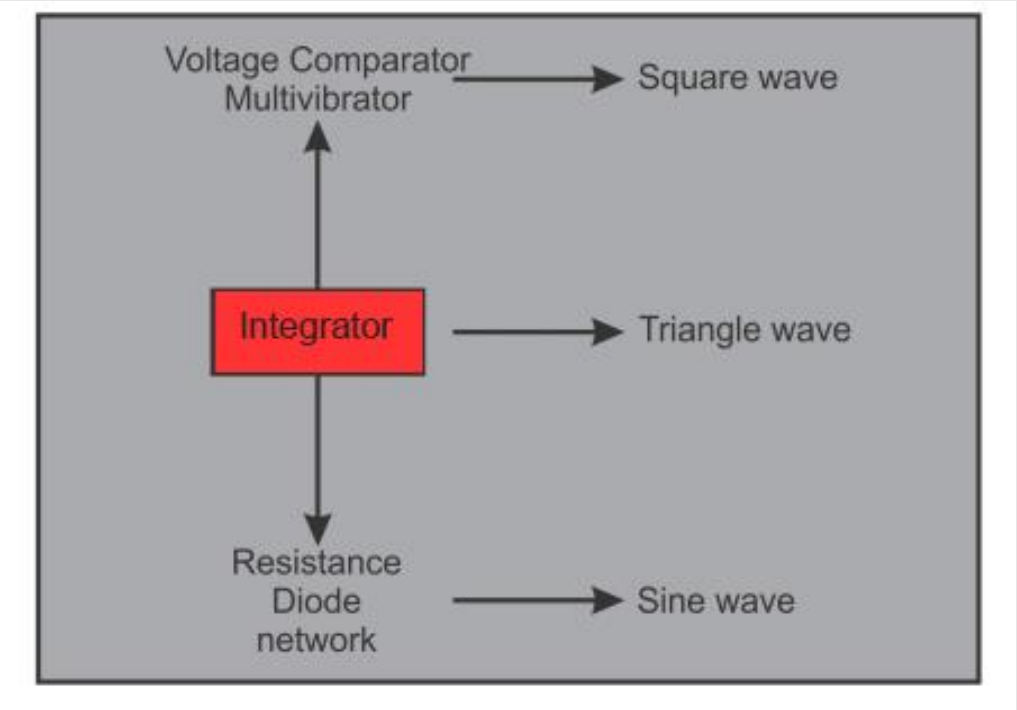

Practical

- In practical integrator circuit, the higher value of resistor R_f is connected in parallel to the capacitor C to achieve the following

i. Avoid the saturation of integrator by limiting the gain at low frequency
ii. The error voltage at the output
iii. Stabilize the gain for the variation of input signal frequency after certain range

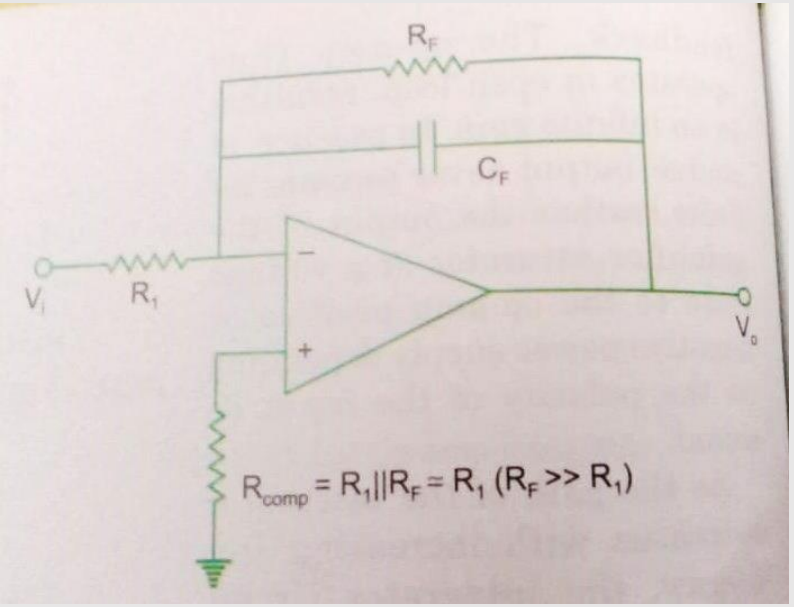

5.1 Precision rectifier: Precision diode

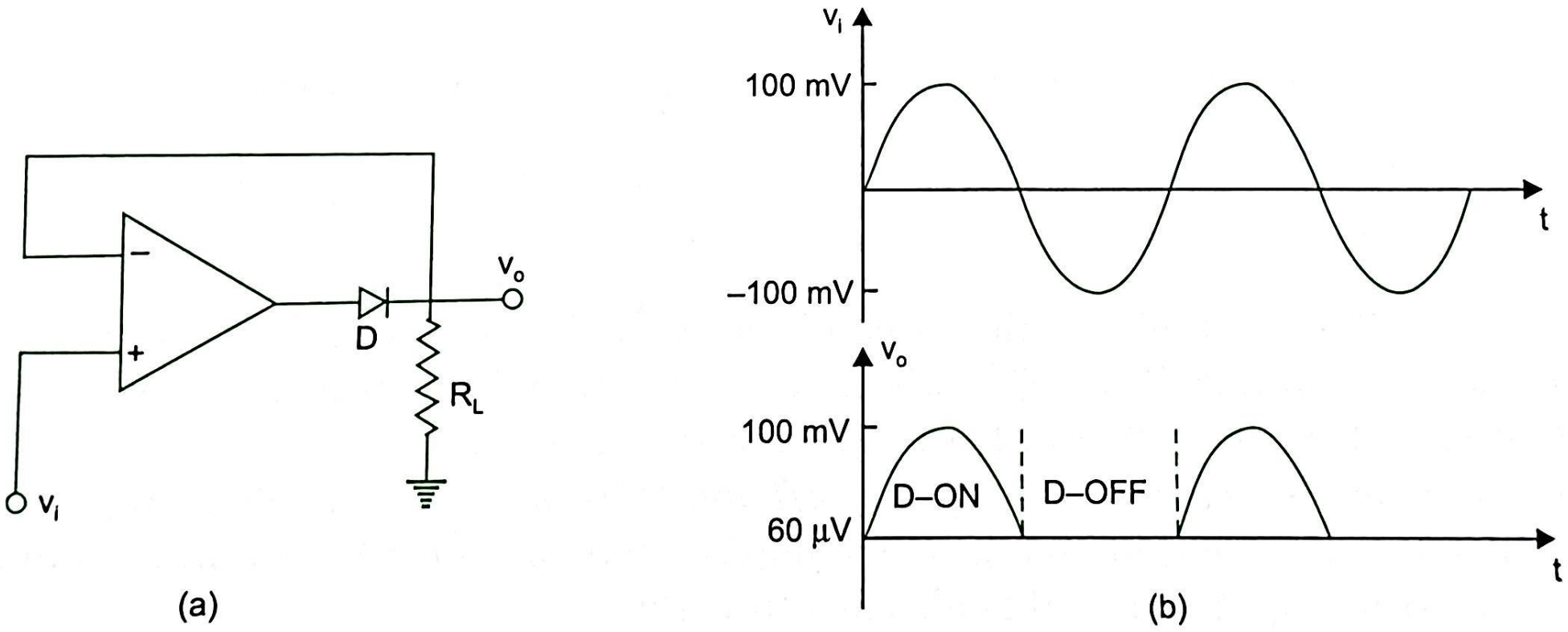

Fig. 4.20 (a) Precision diode, (b) Input and output waveforms

5.2 Precision rectifier: Half-wave rectifier

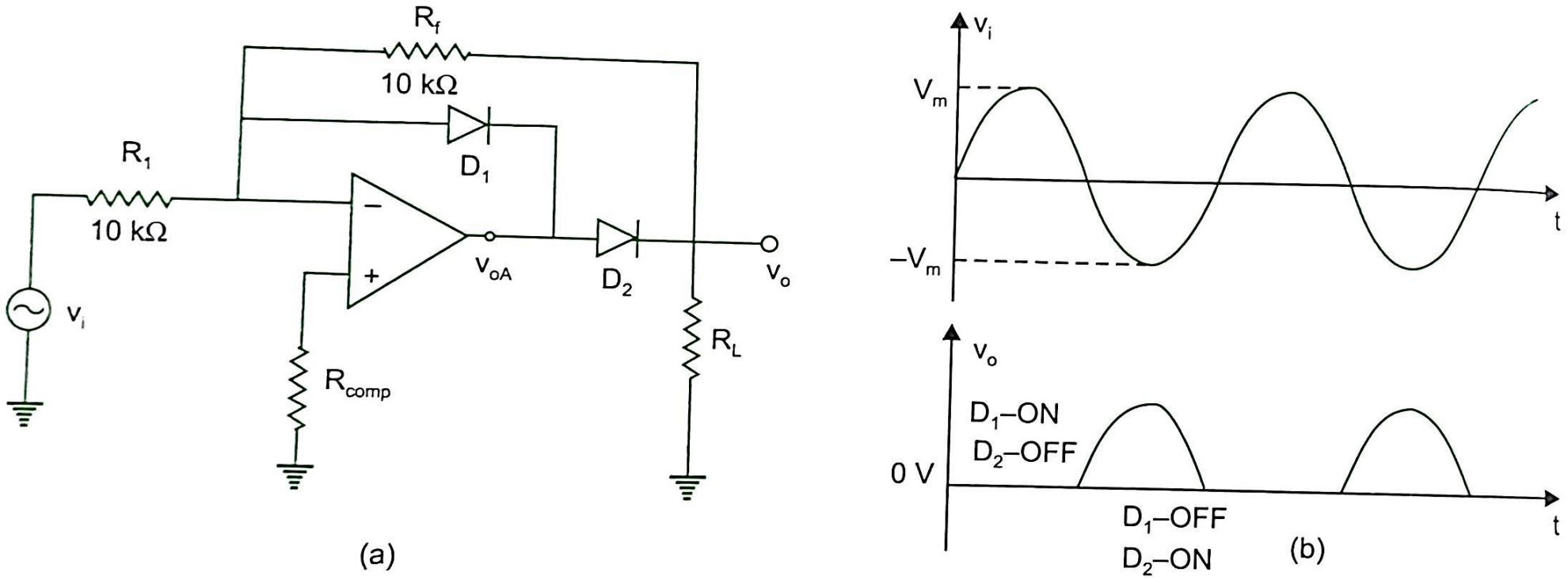

Fig. 4.21 (a) Ideal half-wave rectifier, (b) Input/output waveforms

5.3 Precision rectifier: Full-wave rectifier

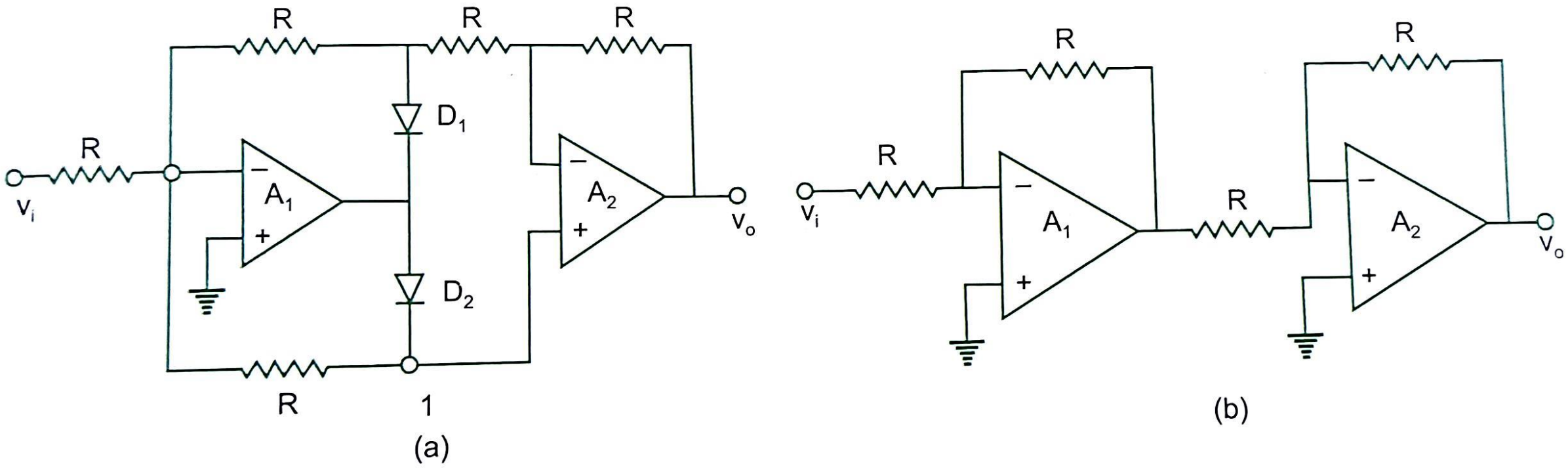

Fig. 4.22 (a) Precision full wave rectifier, (b) Equivalent circuit for $v_i > 0$; D_1 is on and D_2 is OFF; op-amp A_1 and A_2 operate as inverting amplifier

5.3 Precision rectifier: Full-wave rectifier

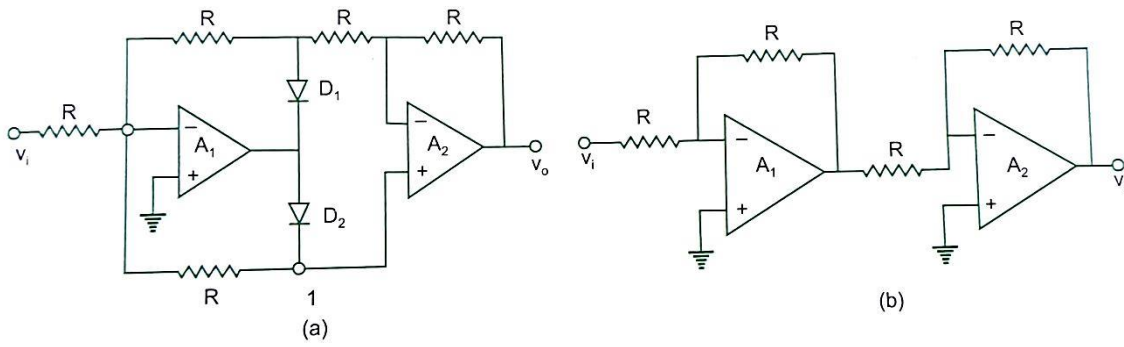

Fig. 4.22 (a) Precision full wave rectifier, (b) Equivalent circuit for $v_i > 0$; D_1 is on and D_2 is OFF; op-amp A_1 and A_2 operate as inverting amplifier

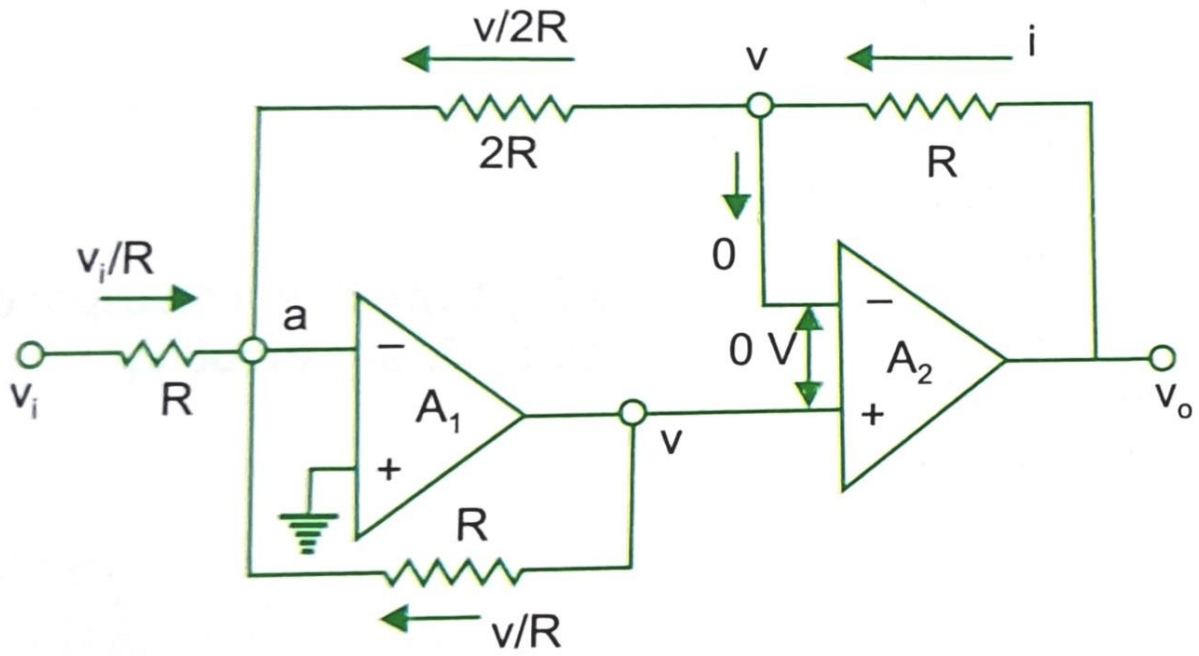

(c)

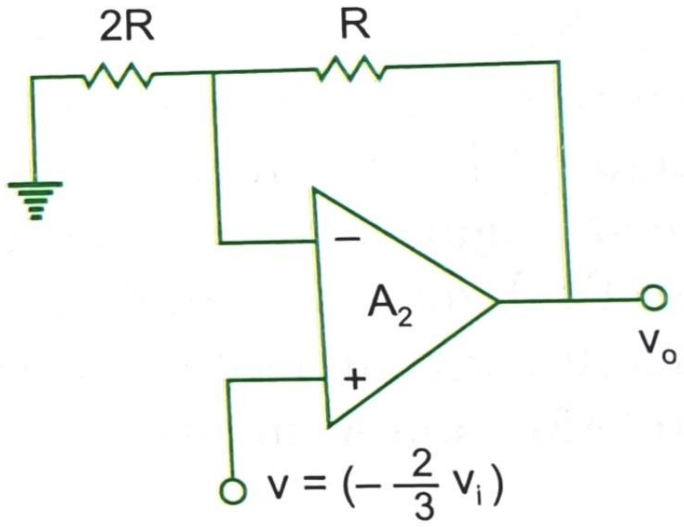

(d)

Fig. 4.22 (c) Equivalent circuit for $v_i < 0$, (d) Equivalent circuit of (c)

5.3 Precision rectifier: Full-wave rectifier

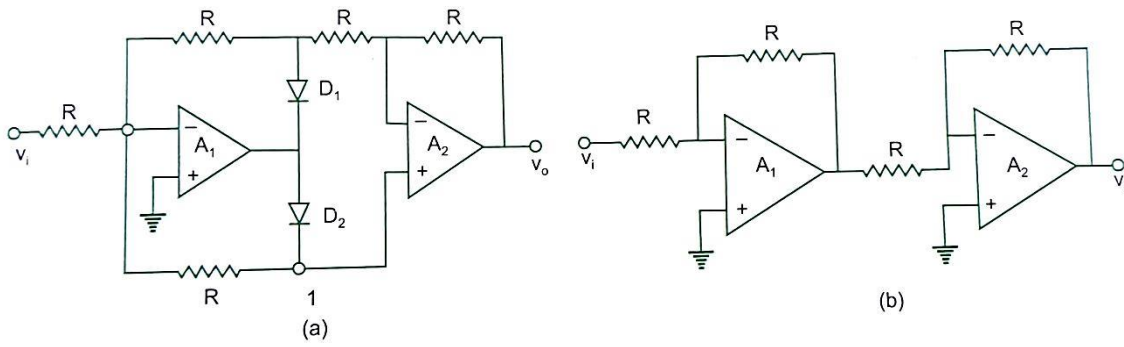

Fig. 4.22 (a) Precision full wave rectifier, (b) Equivalent circuit for $v_i > 0$; D_1 is on and D_2 is OFF; op-amp A_1 and A_2 operate as inverting amplifier

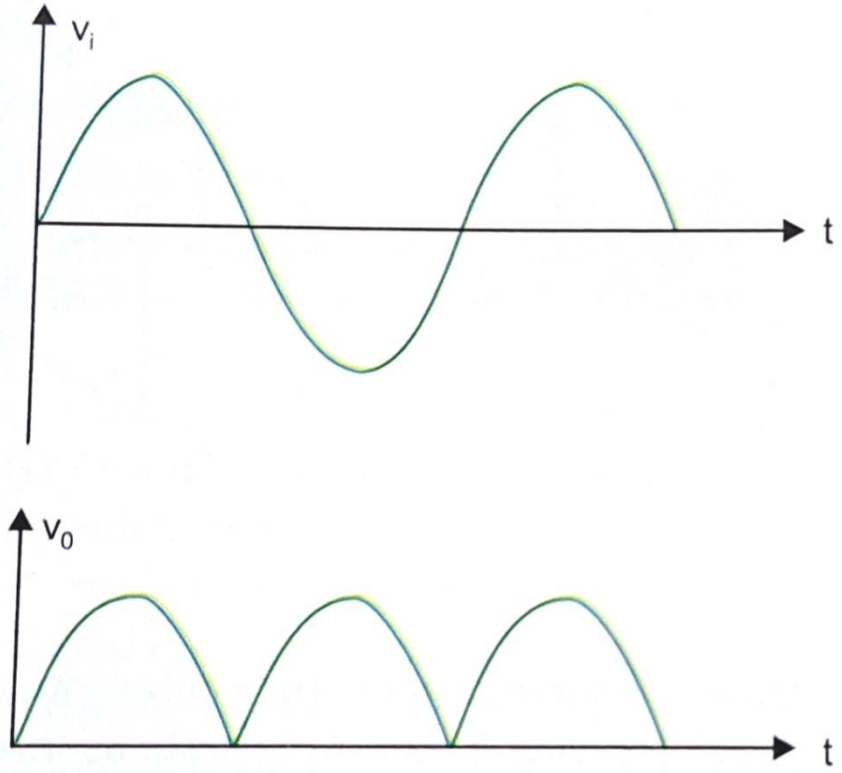

Fig. 4.22 (e) Input and output waveforms

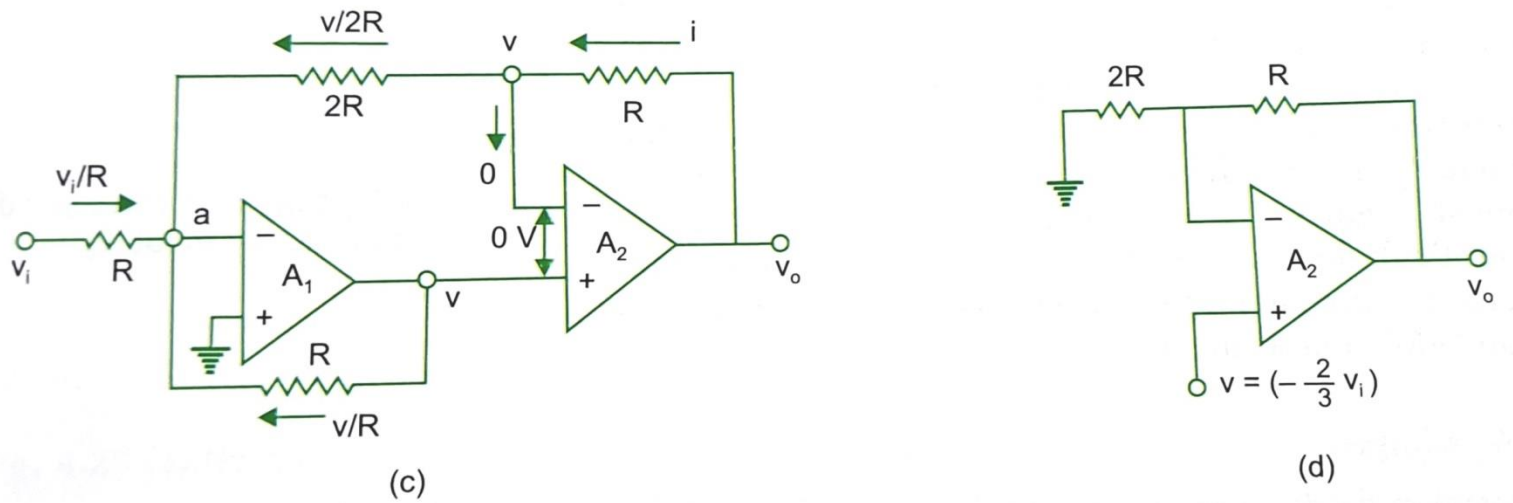

Fig. 4.22 (c) Equivalent circuit for $v_i < 0$, (d) Equivalent circuit of (c)

5.3 Precision rectifier: Full-wave rectifier

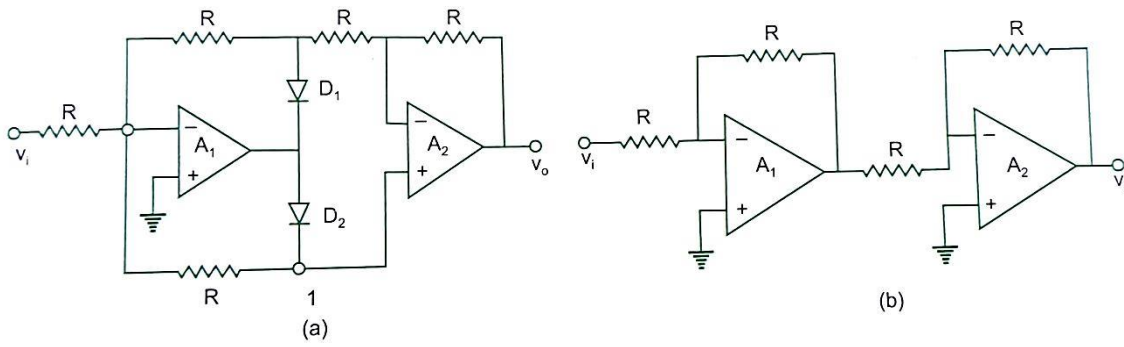

Fig. 4.22 (a) Precision full wave rectifier, (b) Equivalent circuit for $v_i > 0$; D_1 is on and D_2 is OFF; op-amp A_1 and A_2 operate as inverting amplifier

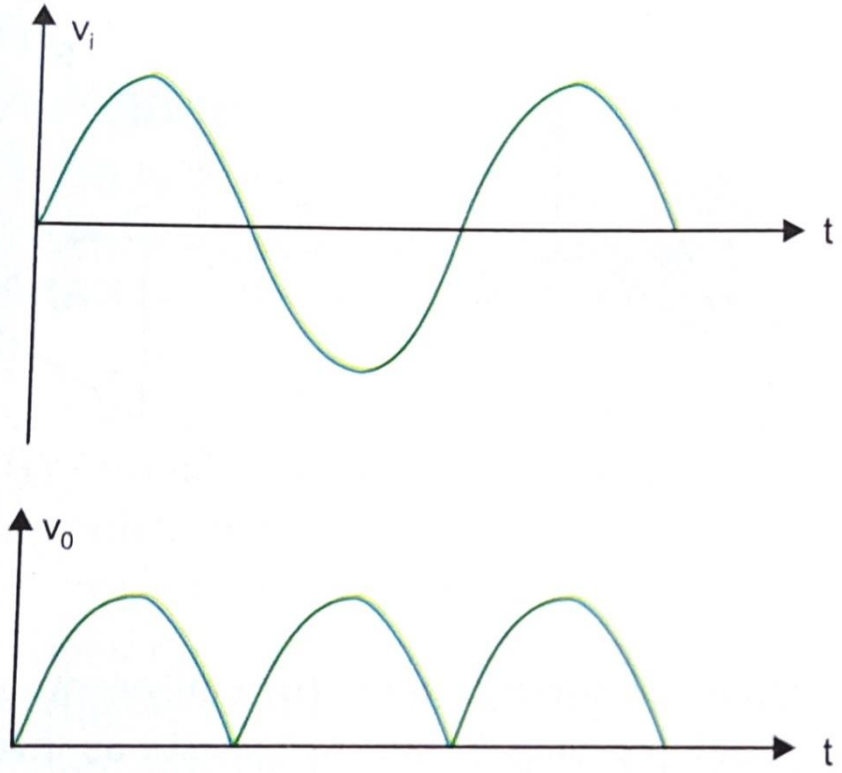

Fig. 4.22 (e) Input and output waveforms

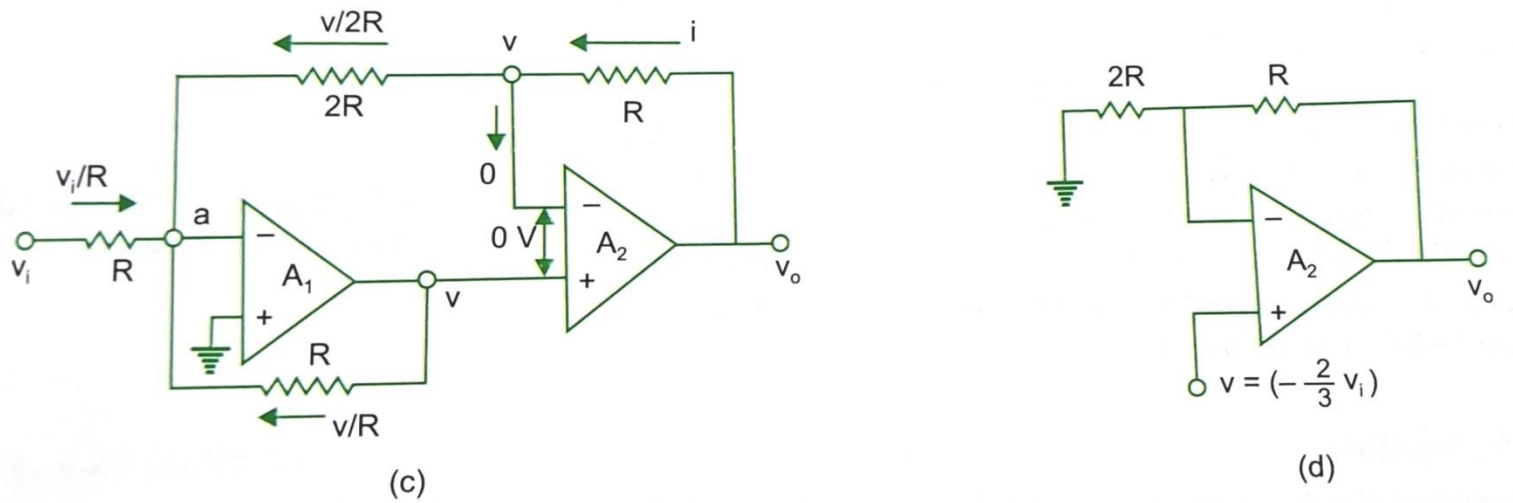

Fig. 4.22 (c) Equivalent circuit for $v_i < 0$, (d) Equivalent circuit of (c)