Module-3

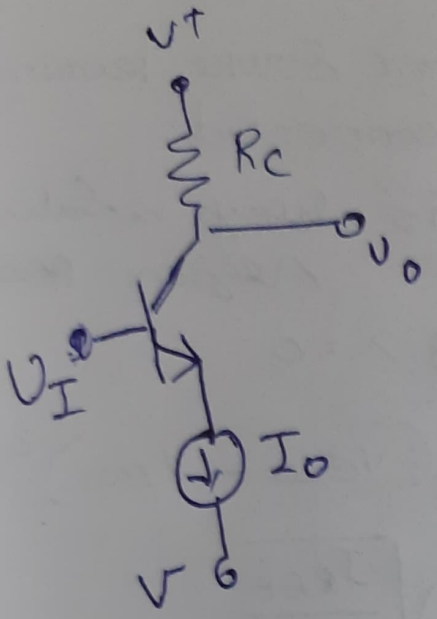

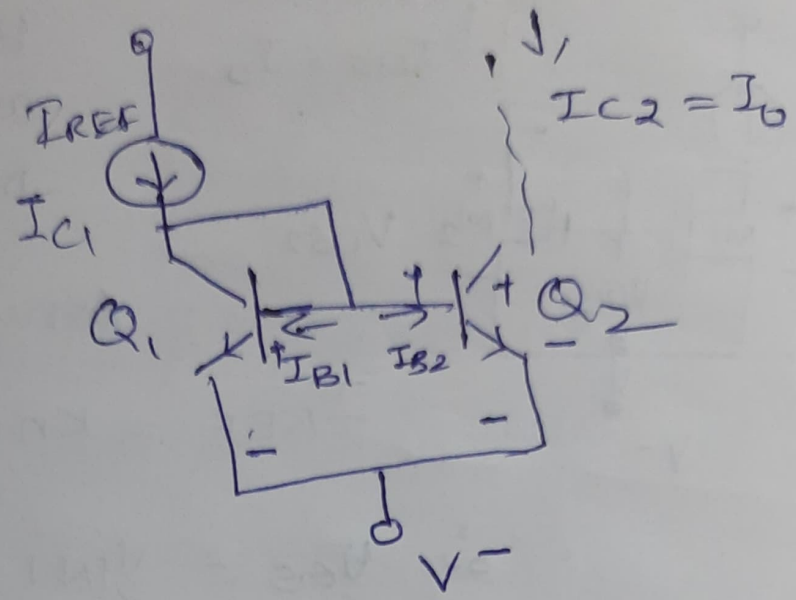

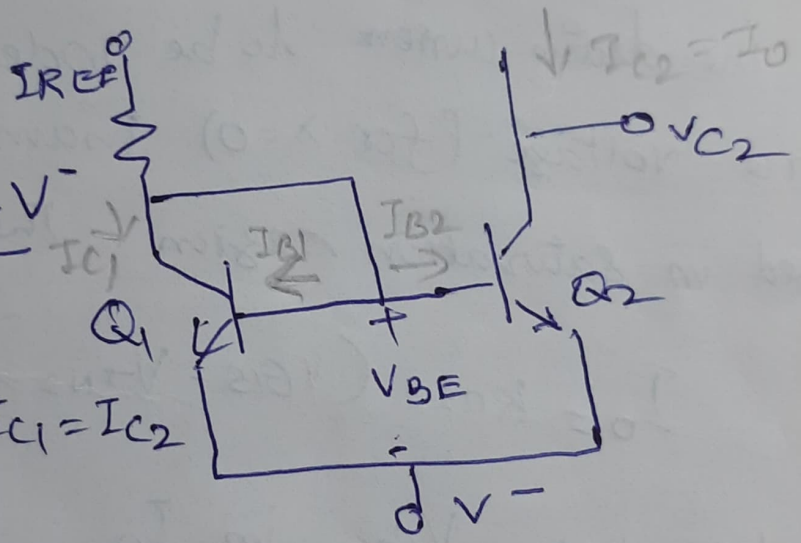

$$I_{REF} = \frac{V^+ - V_{BE} - V^-}{R_1}$$

$$I_{B1} = I_{B2} \quad I_{C1} = I_{C2}$$

$$I_{REF} = I_{C1} + I_{B1} + I_{B2}$$

$$= I_{C1} + 2I_{B2}$$ Replacing I_{C1} by I_{C2}

noting that $I_{B2} = I_{C2}/\beta$

$$I_{REF} = I_{C2} + 2\frac{I_{C2}}{\beta} = I_{C2}\left(1 + \frac{2}{\beta}\right)$$

$$I_{C2} = I_o = \frac{I_{REF}}{1 + \frac{2}{\beta}}$$

Basic two transistor MOSFET Current Source

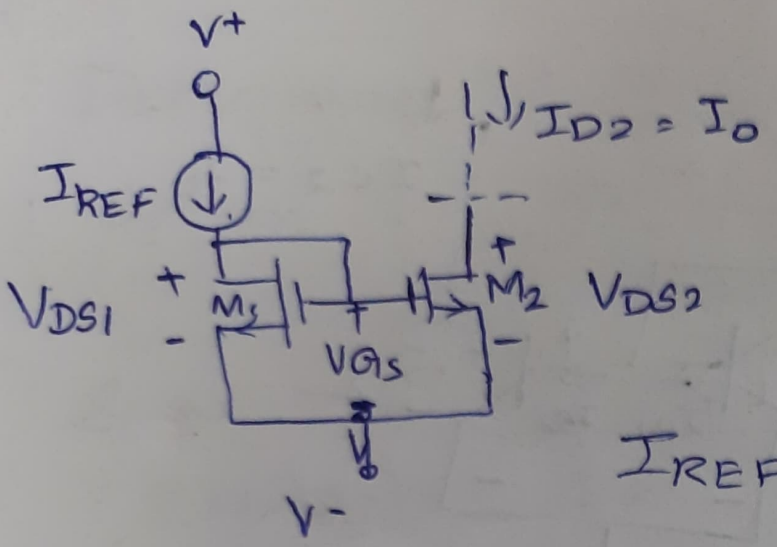

Drain & Source terminals are connected

M_1 is always in Saturation region

Assuming $\lambda = 0$

$$I_{REF} = K_{n1} (V_{GS} - V_{TN1})^2$$

$$\therefore V_{GS} = V_{TN1} + \sqrt{\frac{I_{REF}}{K_{n1}}}$$

For the drain current to be independent of drain-source voltage (for $\lambda = 0$) transistor M_2 should be biased in saturation region. The load current

$$I_O = K_{n2} (V_{GS} - V_{TN2})^2$$

Substituting V_{GS} in I_O

$$I_O = K_{n2} \left(\sqrt{\frac{I_{REF}}{K_{n1}}} + V_{TN1} - V_{TN2} \right)^2$$

If M_1 & M_2 are identical transistors

$$V_{TN1} = V_{TN2}$$

$$K_{n1} = K_{n2}$$

$$I_O = I_{REF}$$

$\frac{dI_O}{I_{REF}}$

$dI_O = (0+$

$$\frac{dI_O}{dV_{DS2}} = \lambda I$$

$$I_0 = \frac{(W/L)_2}{(W/L)_1} I_{ref}$$

Since there are no gate currents, the induced load current and reference current changes if W & length ratios

O/p resistance

The stability of the load current as a function of drain to source voltage is an important consideration

$$I_0 = \underbrace{K_{n2}(V_{GS} - V_{TN_2})^2}_{(W/L)_2}(1 + \lambda_2 V_{DS2})$$

$$I_{REF} = \underbrace{K_{n1}(V_{GS} - V_{TN1})^2}_{(W/L)_1}(1 + \lambda_1 V_{DS1})$$

V_{TN}, μ_n, C_{ox} & λ are identical : both devices & channel length parameter

$$\frac{I_0}{I_{REF}} = \frac{(W/L)_2}{(W/L)_1} \frac{(1 + \lambda V_{DS2})}{(1 + \lambda V_{DS1})}$$

$V_{DS1} = V_{GS1}$ (generally)

$d(1+\lambda V_{DS2})$

$\lambda V_{DS1} = \lambda V_{GS1} << 1$

$\lambda d V_{DS2})$

$(W/L)_2 = (W/L)_1$; $I_0/I_{REF} = (1 + V_{DS2})$

Change in bias current in V_{DS2}

$$1/R_0 = \left(\frac{d I_0}{d V_{DS2}}\right) = 1/r_0$$

$= 1/R_0$

$I_{REF} \approx I_0$, $r_0 = \frac{1}{\lambda I_0}$

O/p resistance $r_o = \frac{1}{\lambda I_o} = \frac{1}{\lambda I_o}$

r_o = O/p resistance of transistor

MOSFET current sources resume large O/p resistance for excellent stability

Reference current

Ref current in BJT is established by bias voltages and resistor.

Since MOSFET can be configured to act like resistor reference current in MOSFET current mirror is usually established by using additional transistors

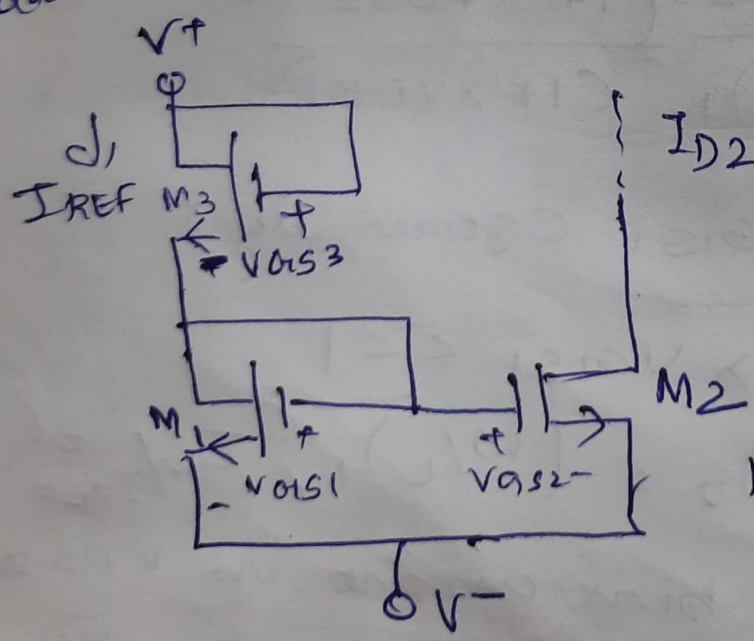

M_1 & M_3 in series

assuming $\lambda = 0$

$$K_{n1}(V_{GS1} - V_{TN1})^2 = K_{n3}(V_{GS3} - V_{TN3})^2$$

If we again assume that V_{TN}, μ_n, C_{ox} are

identical in all transistors

Final $$\boxed{V_{GS1} = \sqrt{\frac{(W/L)_3}{(W/L)_1}}\, V_{GS3} + \left(1 - \sqrt{\frac{(W/L)_3}{(W/L)_1}}\right) V_{TN}}$$

$$(V_{GS1} - V_{TN1})^2 = \frac{K_{n3}}{K_{n1}} (V_{GS3} - V_{TN3})^2$$

$$(V_{GS1} - V_{TN1}) = \sqrt{\frac{K_{n3}}{K_{n1}}} (V_{GS3} - V_{TN3})$$

$$V_{GS1} = \sqrt{\frac{K_{n3}}{K_{n1}}} (V_{GS3} - V_{TN3}) + V_{TN1}$$

$$= \sqrt{\frac{(W/L)_3}{(W/L)_1}}\, V_{GS3} - \sqrt{\frac{(W/L)_3}{(W/L)_1}}\, V_{TN3} + V_{TN1}$$

$$V_{GS1} = \sqrt{\frac{(W/L)_3}{(W/L)_1}}\, V_{GS3} + \left(1 - \sqrt{\frac{(W/L)_3}{(W/L)_1}}\right) V_{TN}$$

$$\because V_{TN3} = V_{TN1} = V_{TN}$$

From the ckt

$$V_{GS1} + V_{GS3} = V^+ - V^-$$

$$V_{GS3} = V^+ - V^- - V_{GS1}$$

$$V_{GS1} = \sqrt{\frac{(W/L)_3}{(W/L)_1}} (V^+ - V^- - V_{GS1}) + \left(1 - \sqrt{\frac{(W/L)_3}{(W/L)_1}}\right) V_{TN}$$

$$V_{GS1} + \sqrt{\frac{(W/L)_3}{(W/L)_1}}\, V_{GS1} = \sqrt{(W/L)_3 / (W/L)_1}\,(V^+ - V^-) + \left(1 - \sqrt{\frac{(W/L)_3}{(W/L)_1}}\right) V_{TN}$$

$$V_{GS2} = \frac{\sqrt{\left(\frac{(W/L)_3}{(W/L)_1}\right)}}{1 + \sqrt{\frac{(W/L)_3}{(W/L)_1}}}\,(V^+ - V^-) + \frac{\left(1 - \sqrt{\frac{(W/L)_3}{(W/L)_1}}\right) V_{TN}}{1 + \sqrt{\frac{(W/L)_3}{(W/L)_1}}}$$

$$= V_{GS2}$$

Finally the load current for $\lambda = 0$

$$I_O = \frac{k_n'}{2} \cdot \left(\frac{W}{L}\right)_2 (V_{GS2} - V_{TN})^2$$

Design a MOSFET current source ckt to meet a set of specs.

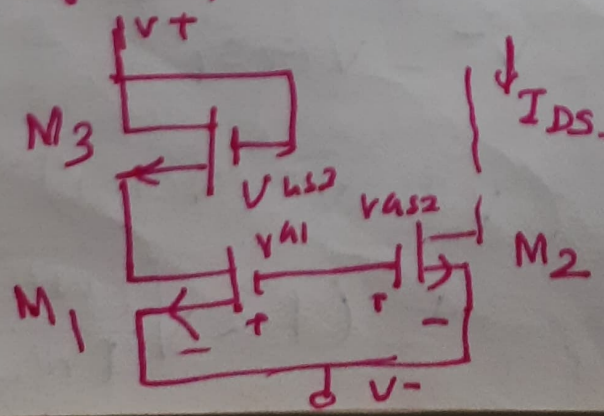

$V^+ = +5\,V$

$V^- = 0$

$k_n' = 40\,\mu A/V^2$

$V_{TN} = 1\,V$

$\lambda = 0$

Design a ckt with $I_{REF} = 0.25\,mA$, $I_O = 0.10\,mA$, $V_{DS2} = 0.55\,V$

$$(W/L)_2 = \frac{I_o}{\left(\frac{k_n'}{2}\right)(V_{GS2} - V_{TN})^2}$$

$$= \frac{0.10}{(0.02)(1.85-1)^2} = 6.92$$

The reference current is given by

$$I_{REF} = \frac{k_n'}{2}\left(\frac{W}{L}\right)_1 (V_{GS1} - V_{TN})^2$$

$$V_{GS_1} = V_{GS2}$$

$$(W/L)_1 = \frac{I_{REF}}{\left(\frac{k_n'}{2}\right)(V_{GS_2} - V_{TN})^2}$$

$$= \frac{0.25}{(0.02)(1.85-1)^2} = 17.3$$

$$V_{GS_3} = (V^+ - V^-) - V_{GS_1}$$

$$= 5 - 1.85 = 3.15V$$

$$I_{REF} = k_{n3}(V_{GS_3} - V_{TN})^2$$

$$\left(W/L\right)_3 = \frac{I_{REF}}{\left(\frac{K_n'}{2}\right)\left(V_{GS3} - V_{TN}\right)^2}$$

$$= \frac{0.25}{(0.02)(3.15-1)^2} = 270$$

Cascode current mirror

In MOSFET current source ckt o/p resistance is a measure of the stability with respect to change in o/p voltage

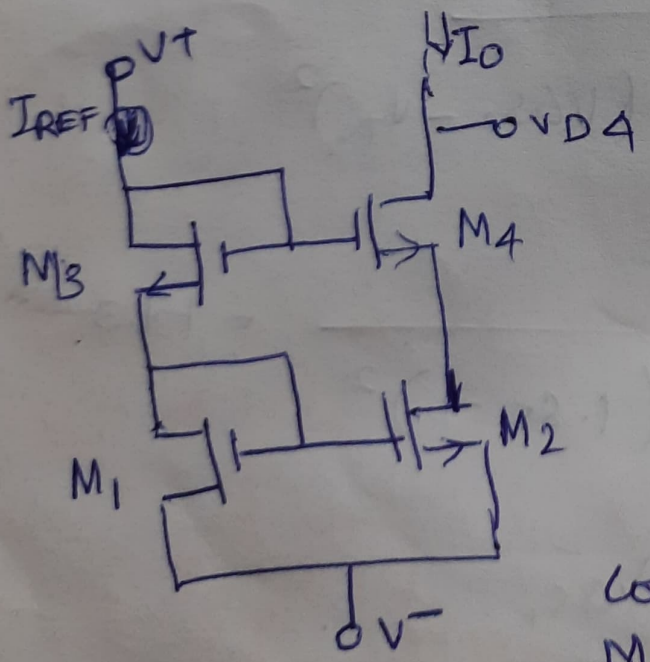

To determine the o/p resistance at the drain of M_4 we use small signal equivalent ckt, since I_{REF} is a constant the gate voltages to M_1 to M_3 & hence to M_2 & M_4 are constant

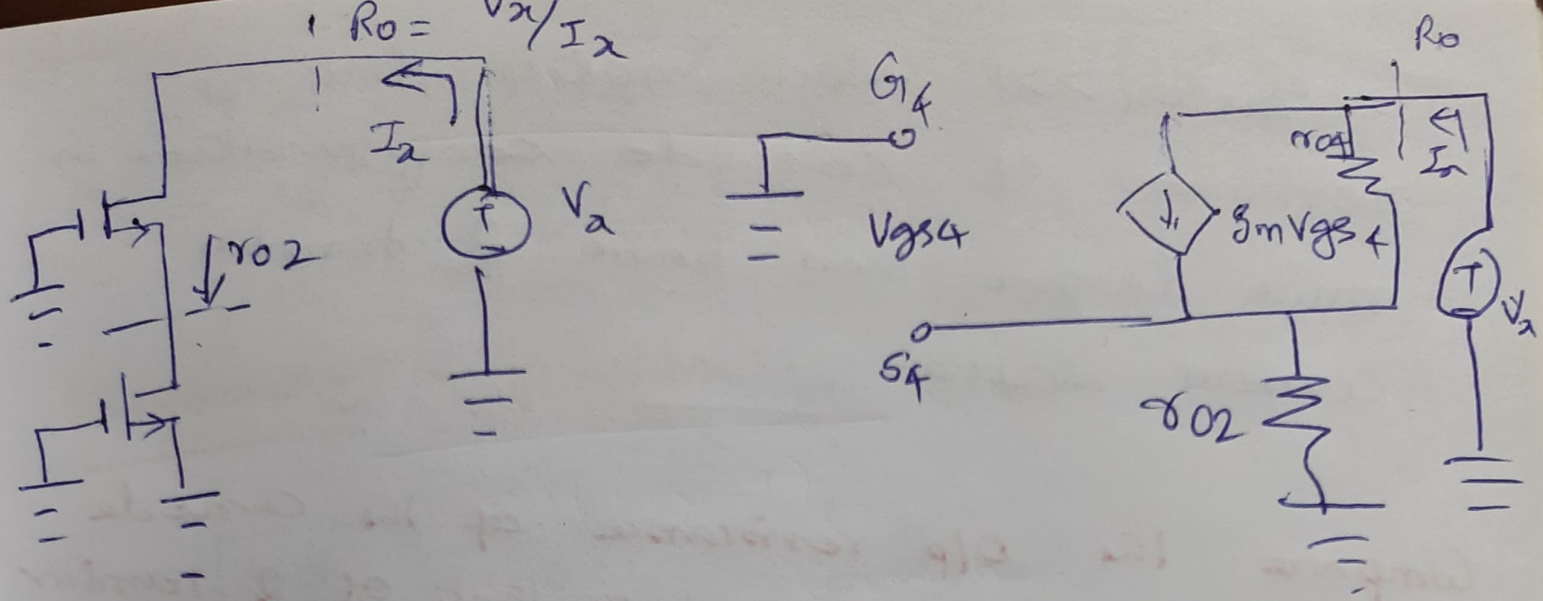

KCL

$$I_x = g_m V_{gs4} + \frac{V_x - (-V_{gs4})}{r_{o4}}$$

Also,

$V_{gs4} = V_{gs2}$

$V_{g2} = I_x R_o$

$$V_{gs_2} = V_{gs4} = -I_x r_{o2}$$

$$I_x = g_m V_{gs4} + \frac{V_x + V_{gs4}}{r_{o4}}$$

$$I_x = -g_m I_x r_{o2} + \frac{V_x - I_x r_{o2}}{r_{o4}}$$

$\frac{A+B}{2} = \frac{A}{2} + \frac{B}{2}$

$$I_x + g_m I_x r_{o2} = \frac{V_x}{r_{o4}} - \frac{I_x r_{o2}}{r_{o4}}$$

$$I_x + g_m I_x r_{o2} + \frac{I_x r_{o2}}{r_{o4}} = \frac{V_x}{r_{o4}}$$

$$R_o = \frac{V_x}{I_x} = r_{o4} + r_{o2}(1 + g_m r_{o4})$$

$g_m r_{o4} >> 1$ which implies that o/p resistance of cascode configuration is much larger than basic 2 transistor current source.

Compare the o/p resistance of the cascode MOSFET current source to that of 2-transistor current source

Consider 2 transistor current source in

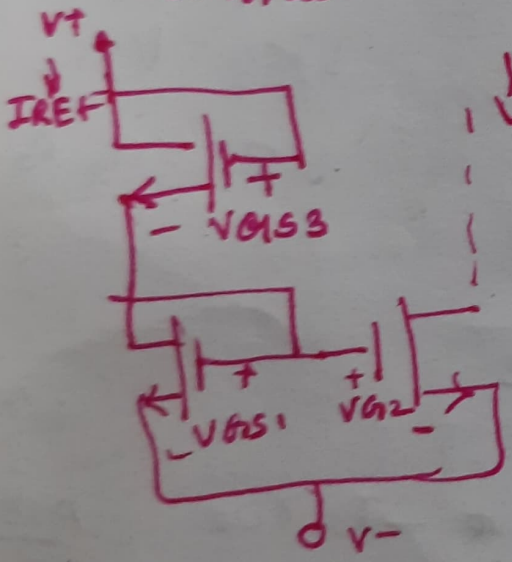

$I_{D2} = I_o$

Consider 2 transistor current source in Fig. and the cascode current source as above

$I_{REF} = I_o = 100\mu A$ in both circuits $\lambda = 0.01\ V^{-}$ for all transistors

$g_m = 0.5\ mA/V$

o/p resistance 2 transistor current source

$$r_o = \frac{1}{\lambda I_{REF}} = \frac{1}{(0.01)(0.10)} = 1\ M\Omega$$

For cascode ckt we have $r_{o2} = r_{o4} = 1\ M\Omega$

$$R_o = r_{o4} + r_{o2}(1 + g_m r_{o4})$$

$= 1 + (1)[1 + (0.5 \times 10^{-3})(10^{6})]$

$\boxed{R_o = 502\,M\Omega}$

Differential Amplifier:

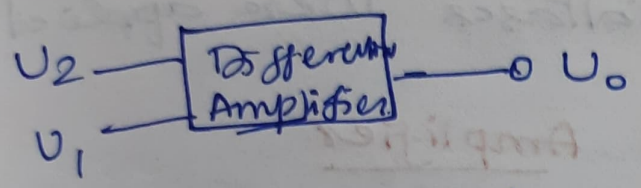

$V_o = A_{Vol}(V_1 - V_2)$

$A_{Vol} \rightarrow$ Open loop Voltage gain

If $V_1 = V_2$ the O/p voltage is zero.

If $V_1 \neq V_2$ the O/p voltage is non-zero.

we define differential mode I/p voltage

$V_d = V_1 - V_2$

Common mode i/p voltage

$$V_{Com} = \frac{V_1 + V_2}{2}$$

If $V_1 = V_2$ — V_d I/p signal is '0'

$V_{cm} = V_1 = V_2$

For example $V_1 = +10\mu V$

$V_2 = -10\mu V$

$V_d = 20\mu V$

$V_{cm} = 0$

However $v_1 = 110\mu V$

$v_2 = 90\mu V$

$V_d = 110 - 90 = 20\mu V$

$V_{cm} = \frac{110+90}{2} = 100\mu V$

If each pair of i/p voltages were applied

Basic BJT Differential Amplifier

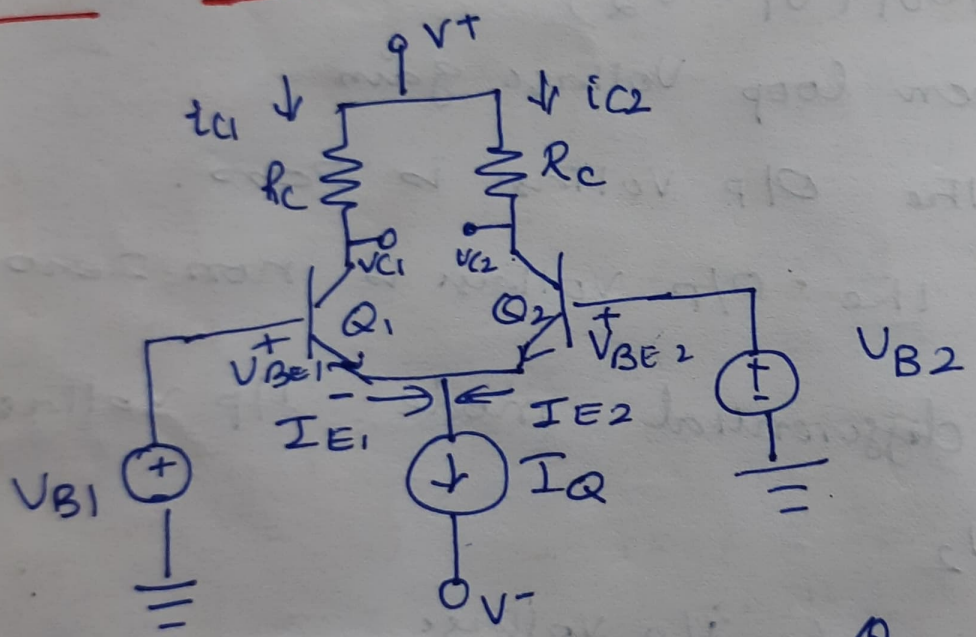

→ 2 identical transistors Q_1, Q_2 emitters connected biased by constant current source I_Q connected to V^-

→ Q_1 Q_2 connected to the supply through resistors R_C

→ Q_1 Q_2 remain in FW biased FW active region

→ 2 collector resistors are equal $R_{C1} = R_{C2}$

→ V_{B1} & V_{B2} are ideal sources, o/p resistance are small

→ +ve, −ve biased, C_c, voltage divider biasing not needed

→ If V_{B1}, V_{B2} are zero Q_1, Q_2 are biased in active region by I_Q

→ CE − −0.7 V − DC coupled differential amplifier

→ so difference in dc i/p voltages are amplified

→ 2 transistors − single stage amplifier

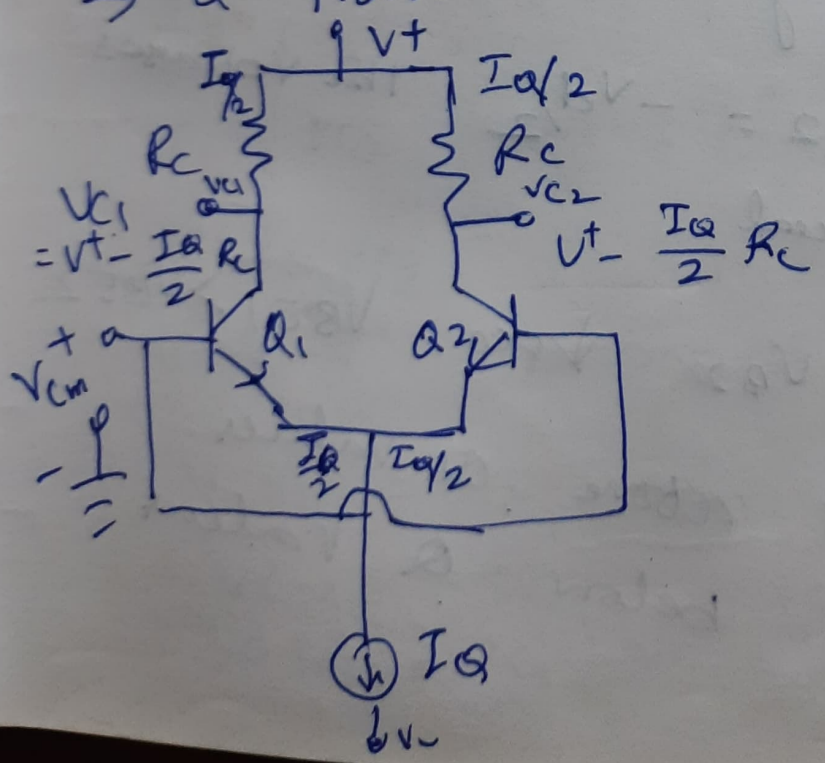

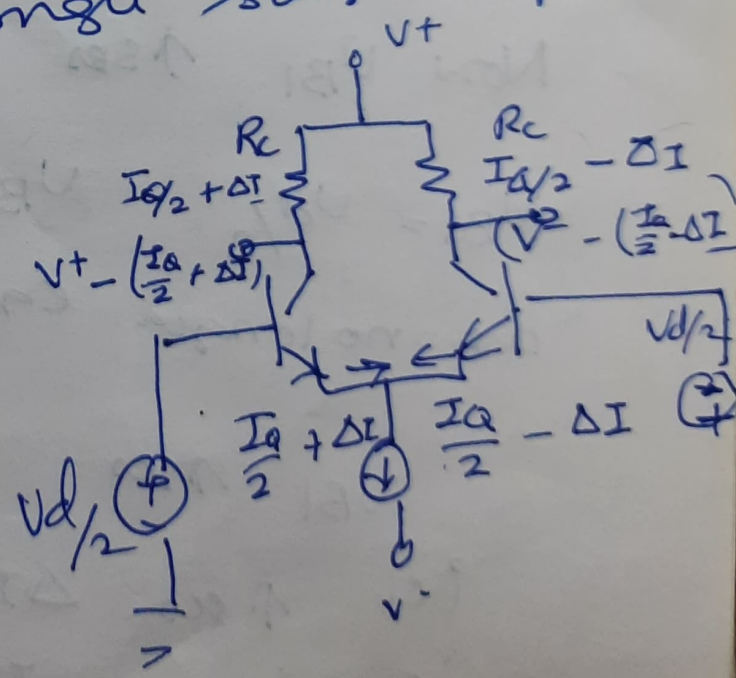

Voltage at common emitters $V_E = V_{Cm} - V_{BE(on)}$

Q_1 & Q_2 are matched or identical

$$i_{E_1} = i_{E_2} = \frac{I_Q}{2}$$

If base currents are negligible

$I_{C_1} \approx I_{E_1}$ $\quad$ $I_{C_2} \approx I_{E_2}$

$$V_{C_1} = V^+ - \frac{I_Q}{2} R_C = V_{C_2}$$

I_Q splits equally b/w Q & Q_2

Difference b/w ~~Q_1 & Q_2 are~~

V_{C_1} & $V_{C_2} = 0$

Now V_{B1} ↑ses by mv V_{B2} ↓ses by same amount

$V_{B1} = V_d/2$ $\quad$ $V_{B2} = -V_d/2$ the voltages are no longer equal

V_{B1} ↑ses V_{B2} ↓ses $V_{BE1} > V_{BE2}$

i_{C_1} ↑ses ΔI above Q values

i_{C_2} ↓ses ΔI below Q values

$$V_{C2} - V_{C1} = \left[V^+ - \left(\frac{I_{CQ}}{2} - \Delta I\right) R_C\right]$$

$$- \left[V^+ - \left(\frac{I_{CQ}}{2} + \Delta I\right) R_C\right]$$

$$= 2 \Delta I R_C$$

A voltage difference is b/w V_{C2} and V_2, when differential mode is applied

× Determine the 'q' collector current & collector emitter voltage in a difference amplifier. Consider diff. amp. $V^+ = 10V$ $V^- = -10V$ $I_Q = 1mA$

$R_C = 10k\Omega$ $\beta = \infty$ (neglect base currents)

$V_A = \infty$ $V_{BE}(on) = 0.7V$ Determine i_{C1} & V_{CE} for common mode voltage $V_{B1} = V_{B2} = V_{CM}$

$-5V$, $+5V$

$$i_{C1} = i_{C2} = \frac{I_Q}{2} = 0.5mA$$

$$V_{C1} = V_{C2} = V^+ - i_{C1} R_C = 10 - (0.5)(10) = 5V$$

$V_{CM} = 0$ $V_E = -0.7V$

$$V_{CE1} = V_{C1} - V_E = 5 - (-0.7) = 5.7V$$

$V_{CM} = -5V$

$$V_{CE1} = V_{C1} - V_E = 5 - (-5.7) = 10.7V$$

DC transfer characteristics

We can perform general analysis of differential pair configuration by

Basic FET Differential pair

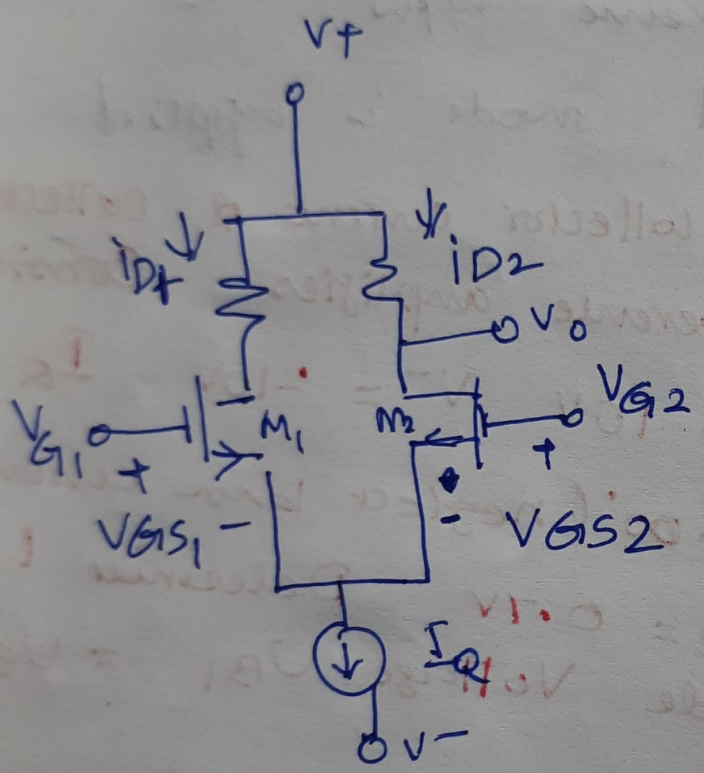

→ we assume basic FET M_1 M_2 biased with constant I_Q

If $V_{G1} = V_{G2} = 0$ M_1 M_2 can be biased with I_Q in saturation region

dc coupled diff amplifier

The dc transfer characteristics of MOSFET can be determined from CKT neglecting M_1 & M_2 assuming both are matched

$$i_{D1} = k_n (V_{GS1} - V_{TN})^2$$

$$i_{D2} = k_n (V_{GS2} - V_{TN})^2$$

Taking square root & subtracting

$$\sqrt{i_{D1}} - \sqrt{i_{D2}} = \sqrt{k_n} (V_{GS1} - V_{GS2})$$

$$= \sqrt{k_n} \, v_d$$

where $v_D = \underset{v_{G1}}{V_{GS1}} - \underset{v_{G2}}{V_{GS2}}$ in differential mode

If $V_D \geq 0$ then $V_{GS1} > V_{GS2}$

$$i_{D1} > i_{D2}$$

$$i_{D1} + i_{D2} = I_Q$$

$$i_{D2} = I_Q - i_{D1}$$

$$\sqrt{i_{D1}} - \sqrt{I_Q - i_{D1}} = \sqrt{k_n} \, v_d$$

Squaring on both sides

$$\left(\sqrt{i_{D1}} - \sqrt{I_Q - i_{D1}}\right)^2 = k_n v_d^2$$

$$\cancel{i_{D1}} - 2\sqrt{i_{D1}}\sqrt{I_Q - i_{D1}} + (I_Q - \cancel{i_{D1}}) = k_n V_d^2$$

$$2\sqrt{i_{D1}}\sqrt{I_Q - i_{D1}} = I_Q - k_n V_d^2$$

$$\sqrt{i_{D1}(I_Q - i_{D1})} = \frac{1}{2}(I_Q - k_n V_d^2)$$

Squaring on both sides,

$$i_{D1}(I_Q - i_{D1}) = \frac{1}{4}(I_Q - k_n V_d^2)^2$$

$$I_Q i_{D1} - i_{D1}^2 = \frac{1}{4}(I_Q - k_n V_d^2)^2$$

$$i_{D1}^2 - I_Q i_{D1} + \frac{1}{4}(I_Q - k_n V_d^2)^2 = 0$$

Applying quadratic $ax^2 + bx + c = 0$

$x = i_{D1}$

$a = 1,\ b = -I_Q,\ c = \frac{1}{4}(I_Q - k_n V_d^2)^2$

$$x = \frac{-b \pm \sqrt{b^2 - 4ac}}{2a}$$

$$= \frac{I_Q \pm \sqrt{(I_Q)^2 - 4(1/4)(I_Q - k_n - V_d^2)^2}}{2}$$

$$= \frac{I_Q \pm \sqrt{I_Q^2 - (I_Q - k_n V_d^2)^2}}{2}$$

$$= \frac{I_Q \pm \sqrt{I_Q^2 - I_Q^2\left(1 - \frac{k_n v_d^2}{I_Q}\right)^2}}{2}$$

$$= \frac{\frac{I_Q}{2} \pm \sqrt{I_Q^2 - I_Q^2\left(1 - k_n v_d^2\right)^2}}{2}$$

$$= \frac{I_Q \pm \sqrt{I_Q^2 - I_Q^2\left(1 - 2k_n v_d^2 + k_n^2 v_d^4\right)}}{2}$$

$i_{D1} > I_Q/2$ therefore $-ve$ is neglected

$$i_{D_1} = \frac{I_Q}{2} + \sqrt{\frac{k_n I_Q}{2}}\, v_d \sqrt{1 - \left(\frac{k_n}{2I_Q}\right) v_d^2}$$

using $i_{D1} + i_{D2} = Q$

$$i_{D2} = \frac{I_Q}{2} - \sqrt{\frac{k_n I_Q}{2}}\, v_d \sqrt{1 - \left(\frac{k_n}{2I_Q}\right) v_d^2}$$

Normalised drain currents

$$\frac{i_{D_1}}{I_Q} = 1/2 + \sqrt{\frac{k_n}{2I_Q}}\, v_d \sqrt{1 - \left(\frac{k_n}{2I_Q}\right) v_d^2}$$

$$\frac{i_{D_2}}{I_Q} = 1/2 + \sqrt{\frac{k_n}{2I_Q}}\, v_d \sqrt{1 - \left(\frac{k_n}{2I_Q}\right) v_d^2}$$

These equations describe dc characteristics

Graph plotted ~~by~~ as a function of a normalized differential i/p voltage

$$V_d' = \frac{V_d}{\cancel{2}\sqrt{\frac{2I_Q}{k_n}}}$$

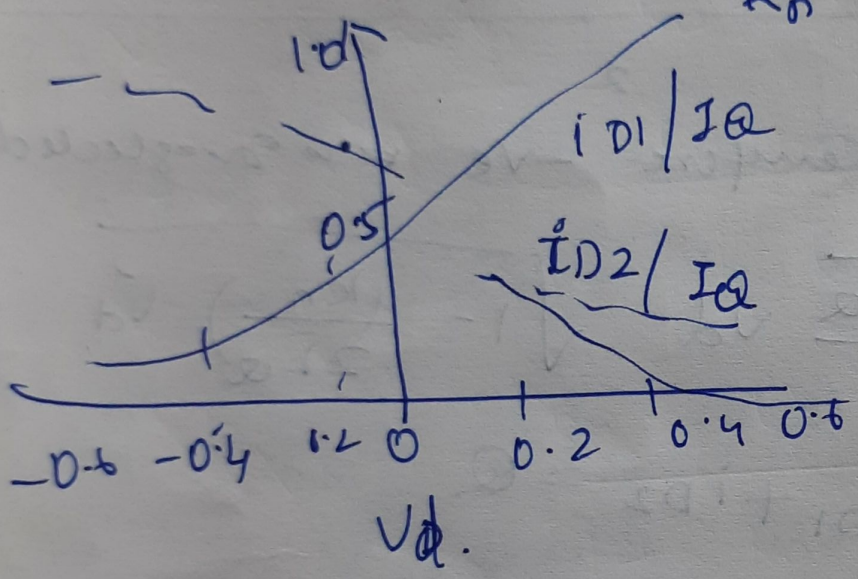

$$|V_d|_{max} = \sqrt{\frac{I_Q}{k_n}}$$

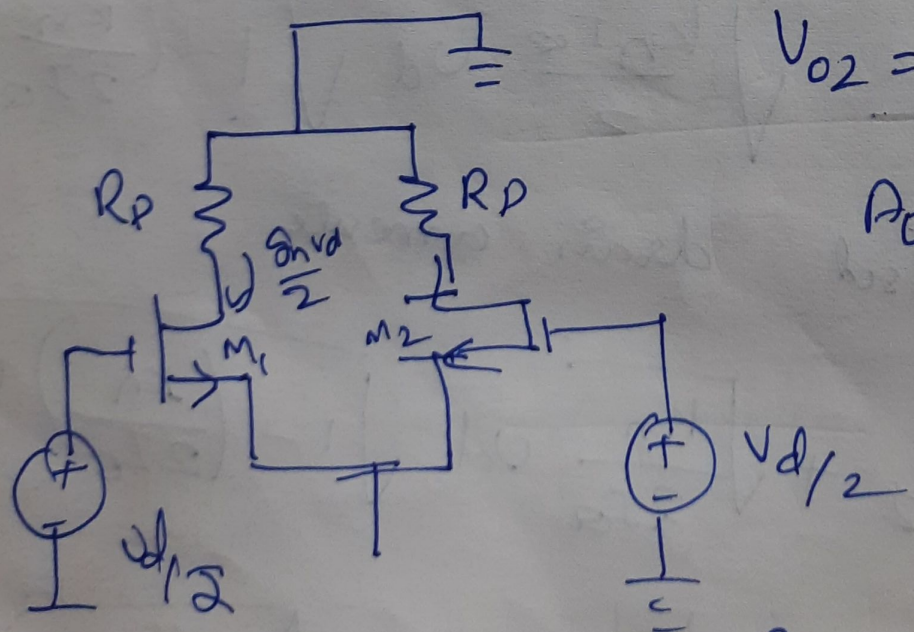

$$V_{o2} = V_o + \left(\frac{g_m V_d}{2}\right) R_D$$

$$A_o = \frac{V_o}{V_d} = \frac{g_m R_D}{2} =$$

$$g_m = \sqrt{\frac{k_n I_Q}{2}} R_D$$

$$g_m = \sqrt{2 k_n I_Q}$$

$$A_d = \frac{V_o}{V_d} = \frac{g_m R_D}{2} = \sqrt{\frac{k_n I_Q}{2}} R_D$$

Compare forward transconductance of MOSFET differential pair to that of bipolar differential pair

$K_n = 0.5\ mA/V^2 \qquad I_Q = 1\ mA$

$$g_m = 2\sqrt{\frac{K_n I_Q}{2}} = 2\sqrt{\frac{(0.5)(1)}{2}}$$

$$= 1.0\ mA/V$$

$$g_m = \frac{I_Q}{2V_T} = \frac{1}{2(0.026)} = 19.2\ mA/V$$

Small Signal equivalent circuit analysis

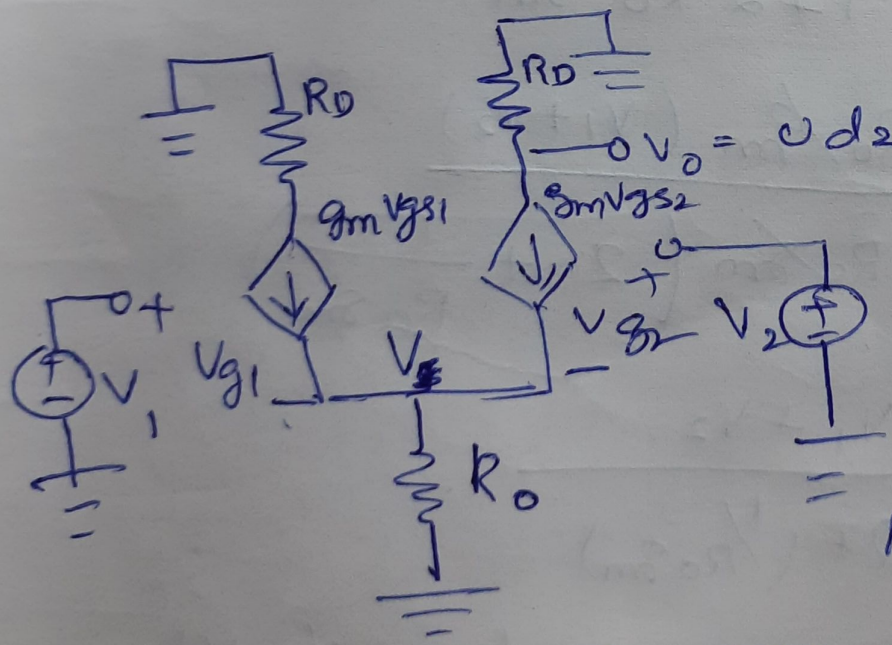

→ Assume transistors are matched with $\lambda = 0$

→ Replace I_Q by R_o

$g_{m1} = g_{m2} = g_m$

Applying KCL at node V_S

$$g_m v_{gs1} + g_m v_{gs2} = \frac{V_S}{R_o}$$

$$v_{gs1} = V_1 - V_S$$

$$v_{gs2} = V_2 - V_S$$

$$g_m(V_1 - V_s) + g_m(V_2 - V_s) = \frac{V_s}{R_o}$$

$$g_m V_1 - g_m V_s + g_m V_2 - g_m V_s = \frac{V_s}{R_o}$$

$$g_m(V_1 + V_2 - 2V_s) = \frac{V_s}{R_o}$$

$$V_s = R_o g_m (V_1 + V_2 - 2V_s)$$

$$V_s = R_o g_m V_1 + R_o g_m V_2 - 2 g_m R_o V_s$$

$$V_s + 2 g_m R_o V_s = R_o g_m V_1 + g_m R_o V_2$$

$$V_s(1 + 2 g_m R_o) = R_o g_m (V_1 + V_2)$$

$$V_s = \frac{R_o g_m (V_1 + V_2)}{1 + 2 R_o g_m}$$

$$= \frac{R_o g_m (V_1 + V_2)}{R_o g_m \left(2 + \frac{1}{R_o g_m}\right)}$$

$$V_s = \frac{V_1 + V_2}{2 + (1/R_o g_m)}$$

For a one sided o/p at drain of M2

$$V_o = V_{d2} = -g_m (V_{gs2}) R_D$$

$$V_o = -g_m (V_2 - V_s) R_D$$

Substituting V_s in V_o

$$V_o = -g_m \left(V_2 - \left(\frac{V_1 + V_2}{2 + \frac{1}{R_o g_m}} \right) \right) R_D$$

$$= -g_m R_D \left(\frac{(2 + 1/R_o g_m) V_2 - V_1 - V_2}{2 + 1/R_o g_m} \right)$$

$$V_o = -g_m R_D \left[\frac{V_2 \left(1 + \frac{1}{g_m R_o}\right) - V_1}{2 + \frac{1}{R_o g_m}} \right]$$

We know that,

$$V_d = V_1 - V_2 \quad (1)$$

$$V_{cm} = \frac{V_1 + V_2}{2} \quad (2)$$

Subtracting,

$$2V_{cm} = V_1 + V_2$$

$$- \quad V_d = V_1 - V_2$$

$$- \quad +$$

$$2V_{cm} - V_d = 2V_2$$

$$\boxed{V_2 = \frac{2V_{cm} - V_d}{2}}$$

Adding (1) & (2)

$$V_d = V_1 - V_2$$

$$2V_{cm} = V_1 + V_2$$

$$2V_{cm} + V_d = 2V_1$$

$$\boxed{V_1 = \frac{2V_{cm} + V_d}{2}}$$

$$V_o = -g_m R_D \left[\frac{\left(\frac{2V_{cm}-V_d}{2}\right)\left(1+\frac{1}{g_m R_o}\right) - \left(\frac{2V_{cm}+V_d}{2}\right)}{2+\frac{1}{g_m R_o}} \right]$$

$$= -g_m R_D \left[\frac{\frac{\cancel{2}V_{cm}}{\cancel{2}}\left[1+\frac{1}{g_m R_o}-1\right] - \frac{V_d}{2}\left[1+\frac{1}{g_m R_o}+1\right]}{2+\frac{1}{g_m R_o}} \right]$$

$$V_o = -g_m R_D \left[\frac{\frac{V_{cm}}{g_m R_o} - \frac{V_d}{2}\left(2+\frac{1}{g_m R_o}\right)}{2+\frac{1}{g_m R_o}} \right]$$

$$= -g_m R_D \left[-\frac{V_d}{2}\right] - \frac{\cancel{g_m} R_D \cdot \frac{1}{\cancel{g_m} R_o} \cdot V_{cm}}{2+\frac{1}{g_m} R_o}$$

$$V_o = \underbrace{g_m R_D \frac{V_d}{2}}_{A_d} - \underbrace{\frac{R_D g_m}{1+2 g_m R_o}}_{A_{cm}} V_{cm}$$

Also

$$V_o = A_d V_d + A_c V_{cm}$$

$$\therefore \quad A_d = \frac{g_m R_D}{2} \qquad A_{cm} = \frac{-g_m R_D}{1+2 g_m R_o}$$

We know that $g_m = 2\sqrt{k_n I_{DQ}}$

Here $I_{DQ} = \frac{I_Q}{2}$

$g_m = \sqrt{2k_n I_Q}$

Sub. g_m in A_d

$$A_d = \frac{\sqrt{2k_n I_Q}}{2} R_D$$

$$A_d = \sqrt{\frac{k_n I_Q}{2}} R_D$$

Sub g_m in A_{cm}

$$A_{cm} = \frac{-g_m R_D}{1 + 2g_m R_o}$$

$$= -\frac{\sqrt{2k_n I_Q} R_D}{1 + 2(\sqrt{2k_n I_Q}) R_o}$$

$$CMRR = \left|\frac{A_d}{A_{cm}}\right| = \left|\frac{\sqrt{k_n I_Q/2} \cdot R_D}{-\frac{\sqrt{2k_n I_Q} \cdot R_D}{1 + 2\sqrt{k_n I_Q} R_o}}\right|$$

$$CMRR = \frac{1}{2}\left[1 + 2\sqrt{2k_n I_Q} \cdot R_o\right]$$

This demonstrates that the CMRR for the MOSFET diff. amp is also a strong fn of o/p resistance of constant current source

Calculate the dc characteristics of a MOSFET diff amp

Determine the differential mode voltage gain, common mode voltage gain and CMRR for a MOSFET diff. amp.

$\lambda = 0.01\ V^{-1}$

$K_D = 16$

$K_n = 1\mu A/V^2$

$R_D = 16k\Omega$

$I_Q = 0.587\ mA$

$R_o = 170k\Omega$

$\frac{1}{\lambda I_Q}$

$$A_d = \sqrt{\frac{k_n I_Q}{2}}\ R_D = \sqrt{\frac{(1)(0.587)}{2}}\ (16)$$

$$8.67$$

$$A_{cm} = \frac{\sqrt{2k_n I_Q}\ \cdot R_D}{1+2\sqrt{2k_n I_Q}\ R_o}$$

$$= \frac{\sqrt{2(1)(0.587)}\ (16)}{1+2\sqrt{2(1)(0.587}\ (170)}$$

$$= -0.0469$$

$$CMRR = 20\log\left(\frac{8.67}{0.0469}\right) = 45.3\ dB$$

21BLC1660-28/09/22

MOSFET Differential amplifier with active Load

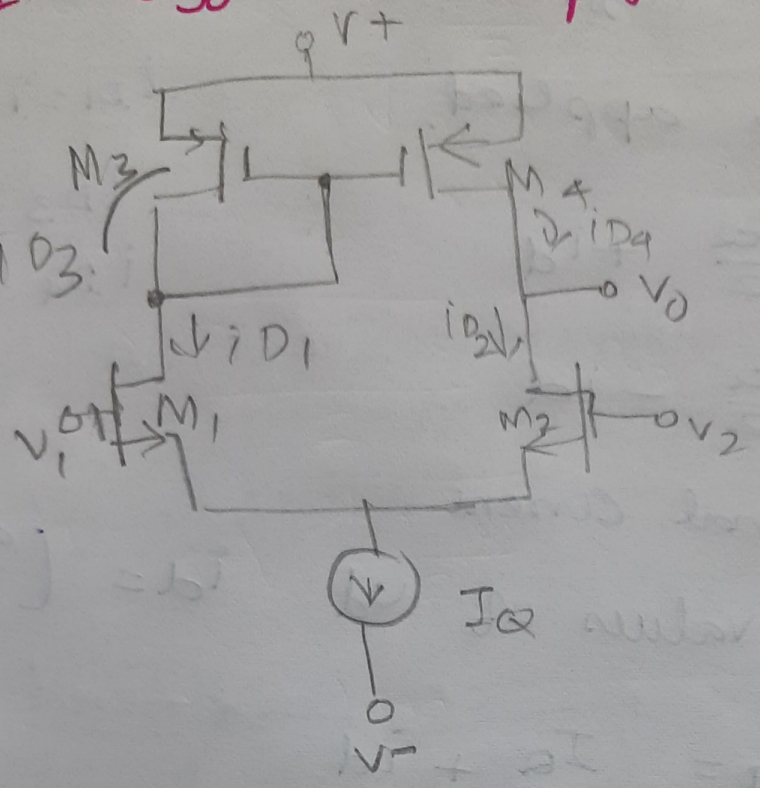

→ We can use active load in conjunction with a MOSFET differential pair

→ M_1, M_2 are n-channel devices and form the differential pair biased with I_Q. The load circuit consists of transistors M_3 and M_4 P-channel devices connected as current mirror configurations.

If $V_1 = V_2 = V_{Cm}$, I_Q evenly splits between M_1 & M_2 $i_{D1} = i_{D2} = I_Q/2$

There are no gate currents therefore

$i_{D3} = i_{D1}$ & $i_{D4} = i_{D2}$

If a small differential mode i/p voltage $v_d = v_1 - v_2$ is applied,

$i_{D1} = i_{D2} = I_Q/2$

$i_{D3} = i_{D1}$

$i_{D4} = i_{D2}$

$$i_{D1} = \frac{I_Q}{2} + i_d$$

$$i_{D2} = \frac{I_Q}{2} - i_d$$

i_d - signal current

For small values of v_d $\quad i_d = \left(\frac{g_m v_d}{2}\right)$

$$I_{D3} = i_{D4} = \frac{I_Q}{2} + i_d$$

$$i_{D4} = i_{D3} = \frac{I_Q}{2} + i_d$$

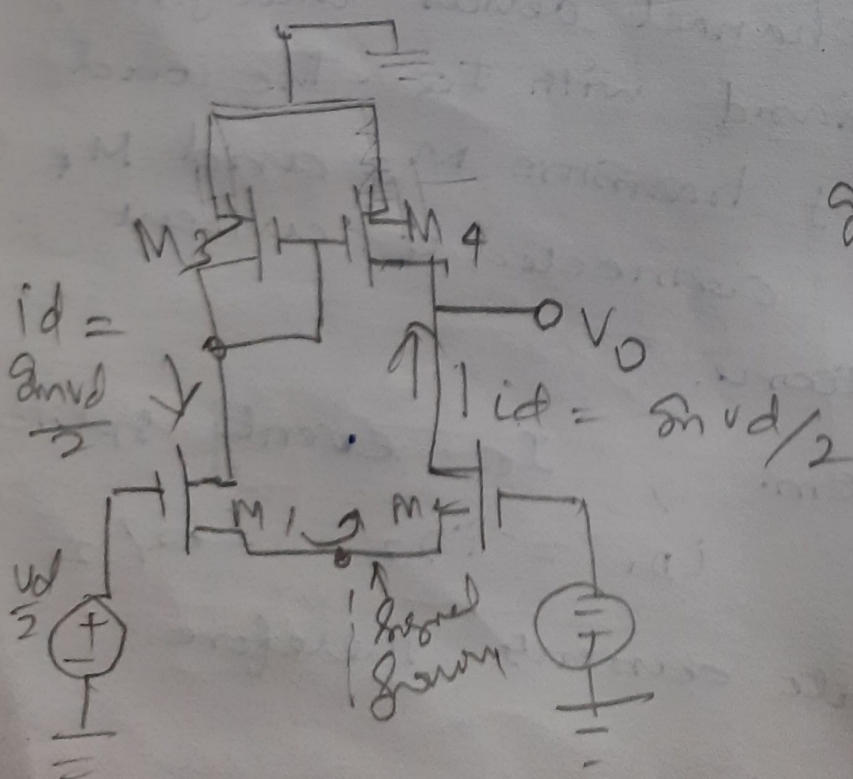

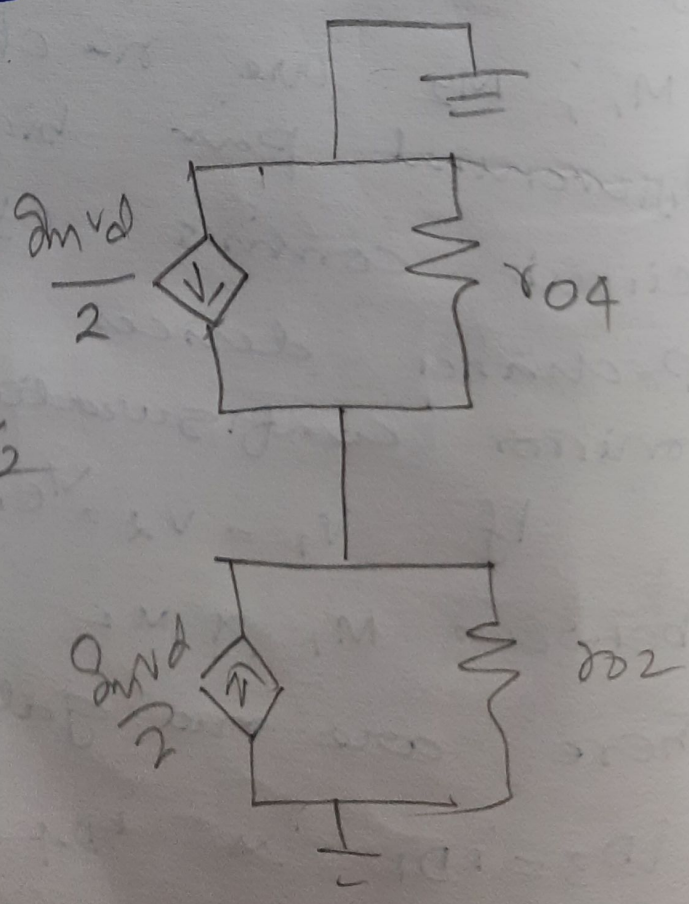

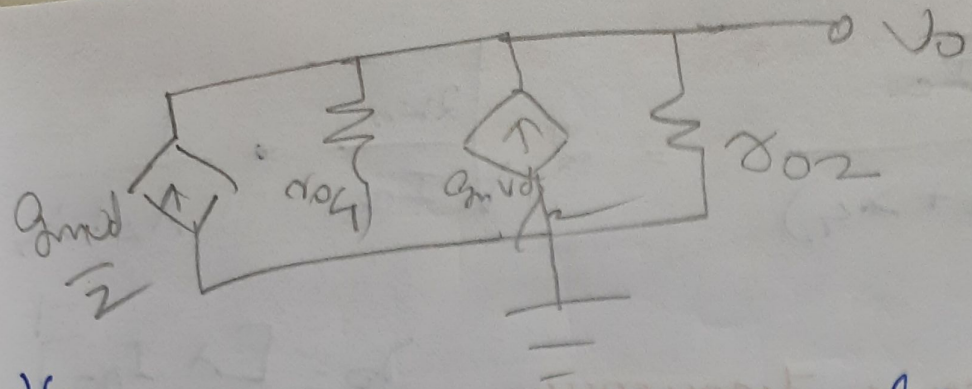

If o/p of M_2 M_2 connected to gate of another MOSFET which is equivalent to an infinite impedance → at low frequency o/p terminal is open ckt

The ckt can be arranged by combining the signal grounds at a common point

$$V_o = 2\left(\frac{g_m v_d}{2}\right)(r_{o3} \| r_{o4})$$

Small signal voltage gain,

$$A_d = \frac{V_o}{V_d} = g_m (r_{o3} \| r_{o4})$$

$$A_d = \frac{g_m}{1/r_{o2} + 1/r_{o4}} = \frac{g_m}{g_{o2} + g_{o4}}$$

$$g_m = 2\sqrt{k_n I_D} = \sqrt{2 k_n I_Q}$$

$$g_{o2} = \lambda_2 I_{DQ_2} = (\lambda_2 I_Q)/2$$

$$g_{o4} = \lambda_4 I_{DQ_4} = (\lambda_4 I_Q/2$$

$$A_d = \frac{2\sqrt{k_n I_{Q}}}{I_{Q}(\lambda_2+\lambda_4)} = 2\sqrt{\frac{2k_n}{I_{Q}}} \cdot \frac{1}{\lambda_2+\lambda_4}$$

$r_o = [\lambda I_{DQ}]^{-1}$

$g_o = \frac{1}{r_o}$

$g_o = \lambda I_{DQ}$

Differential amplifier frequency response.

MOSFET Diff - Amp with Cascode Active load.

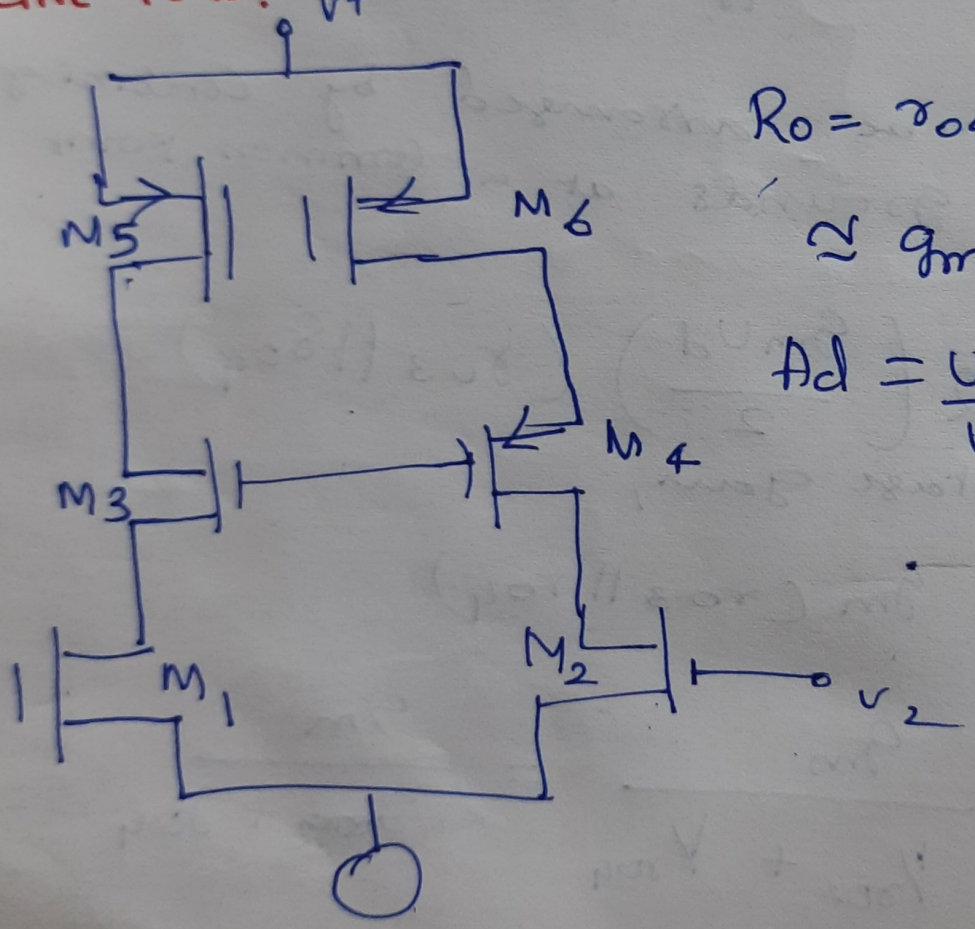

$R_o = r_{o4} + r_{o6}(1+g_m r_{o4})$

$\simeq g_m r_{o4} r_{o6}$

$A_d = \frac{V_o}{V_d} = g_m(r_{o2} \| R_o)$

Calculate the differential voltage gain of MOSFET diff. amp with cascode active load

$$g_m = 2\sqrt{K_n I_{DQ}} = 2\sqrt{\left(\frac{0.08}{2}\right)(10)(0.1)}$$

$$= 0.40 mA/V$$

O/P resistance

$$r_o = \frac{1}{\lambda I_{DQ}} = \frac{1}{(0.02)(0.1)} = 500k\Omega$$

O/P resistance of cascode active load

$$R_o = r_{o4} + r_{o6}(1 + g_m r_{o4})$$

$$= 0.5 + 0.5[1 + (0.4)(500)]$$

$$= 101 M\Omega$$

$$A_d = g_m (r_{o2} \| R_o)$$

$$= (0.40)(500 \| 101000)$$

$$= 200$$

Since $R_o >> r_{o4}$