1. Design a Chebyshev Low pass filter to meet the following specifications :

Acceptable Pass band ripple : 1db

Pass band edge frequency : 400π rad/sec

Minimum Stop band attenuation : 20db

Stop band edge frequency : 800π rad/sec

Sampling rate : 1000 samples/sec

Solution :

Given :

$K_p = -1dB$

$\Omega_p = 400\pi$ rad/sec

$K_s = -20dB$

$\Omega_s = 800\pi$ rad/sec

Sampling rate = 1000 samples/sec

$$\Omega_p' = 1, \quad \Omega_s' = \frac{\Omega_s}{\Omega_p} = \frac{800\pi}{400\pi} = 2$$

$$K_p = 20\log(1-\delta_p) = -1$$

$$\log(1-\delta_p) = -0.05$$

$$\delta_p = 0.108$$

$$K_s = 20\log\delta_s = -20$$

Scanned by CamScanner

$$\log \delta_s = -1$$

$$\delta_s = 0.1$$

$$\delta_p = 1 - \frac{1}{\sqrt{1+\epsilon^2}} = 0.108$$

$$0.892 = \frac{1}{\sqrt{1+\epsilon^2}}$$

$$\sqrt{1+\epsilon^2} = 0.121$$

$$\epsilon = 0.506$$

Discrimination factor, $d = \sqrt{\dfrac{(1-\delta_p)^{-2} - 1}{\delta_s^{-2} - 1}}$

$$d = \sqrt{\frac{(1-0.108)^{-2} - 1}{(0.1)^{-2} - 1}} = \sqrt{\frac{0.25681}{99}} = 0.0509$$

Selectivity factor, $K = \dfrac{\Omega_p'}{\Omega_s'} = \dfrac{1}{2} = 0.5$

$$N = \frac{\cosh^{-1}(1/d)}{\cosh^{-1}(1/K)} = \frac{\cosh^{-1}\left(\frac{1}{0.0509}\right)}{\cosh^{-1}\left(\frac{1}{0.5}\right)}$$

$$= \frac{\cosh^{-1}(19.646)}{\cosh^{-1}(2)} = \frac{\ln\left(19.646 + \sqrt{(19.646)^2 - 1}\right)}{\ln\left(2 + \sqrt{(2)^2 - 1}\right)}$$

$$= \frac{3.6703}{1.3169} = 2.7897$$

Scanned by CamScanner

$N \simeq 3$

$$a = \frac{1}{2}\left(\frac{1+\sqrt{1+\epsilon^2}}{\epsilon}\right)^{1/N} - \frac{1}{2}\left(\frac{1+\sqrt{1+\epsilon^2}}{\epsilon}\right)^{-1/N}$$

$$= \frac{1}{2}\left(\frac{1+\sqrt{1+(0.506)^2}}{0.506}\right)^{1/3} - \frac{1}{2}\left(\frac{1+\sqrt{1+(0.506)^2}}{0.506}\right)^{-1/3}$$

$$a = 0.806 - 0.310 = 0.496$$

$$b = \frac{1}{2}\left(\frac{1+\sqrt{1+\epsilon^2}}{\epsilon}\right)^{1/N} + \frac{1}{2}\left(\frac{1+\sqrt{1+\epsilon^2}}{\epsilon}\right)^{-1/N}$$

$$= \frac{1}{2}\left(\frac{1+\sqrt{1+(0.506)^2}}{0.506}\right)^{1/3} + \frac{1}{2}\left(\frac{1+\sqrt{1+(0.506)^2}}{0.506}\right)^{-1/3}$$

$$b = 0.806 + 0.310 = 1.116$$

$$S_K = \sigma_K + j\Omega_K$$

$$\sigma_K = -a\sin\left[(2K-1)\frac{\pi}{2N}\right]$$

$$\Omega_K = b\cos\left[(2K-1)\frac{\pi}{2N}\right]$$

K	σ_K	Ω_K	S_K
1	-0.248	0.966	$-0.248 + j0.966$
2	-0.496	0	-0.496
3	-0.248	-0.966	$-0.248 - j0.966$

Scanned by CamScanner

$$H_3(s) = \frac{K_N}{(s-s_1)(s-s_2)(s-s_3)}$$

$$H_3(s) = \frac{K_N}{(s+0.248-j0.966)(s+0.496)(s+0.248+j0.966)}$$

$$= \frac{K_N}{s^3+0.98s^2+1.23s+0.49}$$

$K_N = b_0$ $[\because N=3$ is odd$]$

$$H_3(s) = \frac{0.49}{s^3+0.98s^2+1.23s+0.49}$$

$$H_a(s) = H_3(s)\Big|_{s \to \frac{s}{\Omega_c}}$$

$$\Omega_c = \frac{\Omega_p}{\left(10^{-k_p/10}-1\right)^{1/2N}} = \frac{400\pi}{\left(10^{1/10}-1\right)^{1/6}} = \frac{400\pi}{0.798} = 1573.93 \text{ rad/sec}$$

$$H_a(s) = \frac{0.49}{\left(\frac{s}{1573.93}\right)^3 + 0.98\left(\frac{s}{1573.93}\right)^2 + 1.23\left(\frac{s}{1573.93}\right) + 0.49}$$

$$H(z) = H_a(s)\Big|_{s \to \frac{2}{T}\left(\frac{z-1}{z+1}\right)}$$

$$T = \frac{1}{\text{Sampling rate}} = \frac{1}{1000}$$

$$H(z) = \frac{0.49}{\left(\frac{2000\left(\frac{z-1}{z+1}\right)}{1573.93}\right)^3 + 0.98\left(\frac{2000\left(\frac{z-1}{z+1}\right)}{1573.93}\right)^2 + 1.23\left(\frac{2000\left(\frac{z-1}{z+1}\right)}{1573.93}\right) + 0.49}$$

Scanned by CamScanner

2. Design a Chebyshev Low pass filter to meet the following frequency domain specifications :

Acceptable Pass band ripple : 2db

Pass band edge frequency : 40 rad/sec

Minimum Stop band attenuation : $\geq$ 20db

Stop band edge frequency : 52 rad/sec

Solution :

Given: $K_p = -2\,dB$

$\Omega_p = 40$ rad/sec

$K_s = -20\,dB$

$\Omega_s = 52$ rad/sec

$$K_p = 20 \log \left[\frac{1}{\sqrt{1+\epsilon^2}} \right] = -2$$

$$\log \left[\frac{1}{\sqrt{1+\epsilon^2}} \right] = \frac{-1}{10}$$

$$\frac{1}{\sqrt{1+\epsilon^2}} = 0.7943$$

$$\sqrt{1+\epsilon^2} = 1.25897$$

$$1+\epsilon^2 = 1.5850$$

$$\epsilon^2 = 0.585$$

$$\epsilon = 0.76478$$

$$K_s = 20 \log \delta_s = -20$$

$$\delta_s = 0.1$$

Scanned by CamScanner

$$\delta_p = 1 - \frac{1}{\sqrt{1+\epsilon^2}} = 1 - \frac{1}{1.25897}$$

$$\delta_p = 0.20567$$

$$d = \sqrt{\frac{(1-\delta_p)^{-2} - 1}{\delta_s^{-2} - 1}}$$

$$d = \sqrt{\frac{(1-0.20567)^{-2} - 1}{(0.1)^{-2} - 1}}$$

$$d = \sqrt{\frac{(0.79433)^{-2} - 1}{(0.1)^{-2} - 1}} = \sqrt{\frac{1.585-1}{100-1}} = \sqrt{\frac{0.585}{99}}$$

$$d = \sqrt{59.090 \times 10^{-4}}$$

$$d = 0.077$$

$$k = \text{selectivity factor} = \frac{\Omega_p}{\Omega_s} = \frac{40}{52} = 0.769$$

$$N = \frac{\cosh^{-1}\left(\frac{1}{d}\right)}{\cosh^{-1}\left(\frac{1}{k}\right)}$$

$$= \frac{\cosh^{-1}\left(\frac{1}{0.077}\right)}{\cosh^{-1}\left(\frac{1}{0.769}\right)} = \frac{3.25}{0.7569} = 4.29$$

$$N \simeq 5$$

From chebyshev filter design table

$$H_s(s) = \frac{K_N}{(s-s_1)(s-s_2)(s-s_3)(s-s_4)(s-s_5)}$$

Scanned by CamScanner

$$a = \frac{1}{2}\left(\frac{1+\sqrt{1+\epsilon^2}}{\epsilon}\right)^{1/N} - \frac{1}{2}\left(\frac{1+\sqrt{1+\epsilon^2}}{\epsilon}\right)^{-1/N}$$

$$= \frac{1}{2}\left(\frac{1+1.2589}{0.7647}\right)^{1/5} - \frac{1}{2}\left(\frac{1+1.2589}{0.7647}\right)^{-1/5}$$

$$a = 0.2183$$

$$b = \frac{1}{2}\left(\frac{1+\sqrt{1+\epsilon^2}}{\epsilon}\right)^{1/N} + \frac{1}{2}\left(\frac{1+\sqrt{1+\epsilon^2}}{\epsilon}\right)^{-1/N}$$

$$b = 1.0235$$

$$\sigma_k = -a\sin\left[(2k-1)\frac{\pi}{2N}\right] \qquad k=1,2,\ldots,2N$$

$$= -0.2183\sin\left[(2k-1)\frac{\pi}{10}\right]$$

$$\Omega_k = b\cos\left[(2k-1)\frac{\pi}{2N}\right]$$

$$= 1.0235\cos\left[(2k-1)\frac{\pi}{10}\right]$$

k	σ_k	Ω_k
1	-0.0675	0.9734
2	-0.1766	0.6016
3	-0.2183	0
4	-0.1766	-0.6016
5	-0.0675	-0.9734

Scanned by CamScanner

$$H_5(s) = \frac{K_N}{(s-s_1)(s-s_2)(s-s_3)(s-s_4)(s-s_5)}$$

$$= \frac{K_N}{(s+0.0675-j0.9734)(s+0.1766-j0.6016)(s+0.2183)(s+0.1766+j0.6016)(s+0.0675+j0.9734)}$$

$\because$ N is odd, $K_N = b_0 = 0.0817225$

$$H_5(s) = \frac{0.0817225}{s^5+0.7064606s^4+1.4995433s^3+0.6934770s^2+0.45934915+0.0817225}$$

$$H_a(s) = H_5(s)\Big|_{s \to \frac{s}{40}}$$

$$H_a(s) = \frac{8368384}{s^5+28.258424s^4+2399.26928s^3+44382.528s^2+1175933.696s+8368384}$$

Scanned by CamScanner

3. Design a Analog Butterworth filter to meet the following specifications:

Pass band attenuation : 2db

Pass band edge frequency : 20 rad/sec

Stop band attenuation : 10db

Stop band edge frequency : 30 rad/sec

Solution:

Given: $K_P = -2dB$

$K_S = -10dB$

$\Omega_P = 20$ rad/sec

$\Omega_S = 30$ rad/sec

Finding order of filter

$$N = \frac{\log\left[(10^{-K_P/10} - 1)/(10^{-K_S/10} - 1)\right]}{2\log\left(\frac{\Omega_P'}{\Omega_S'}\right)}$$

$$N = \frac{\log\left[(10^{0.2} - 1)/9\right]}{2\log\left(\frac{2}{3}\right)}$$

$\because \Omega_P' = 2, \quad \Omega_S' = \frac{\Omega_S}{\Omega_P}$

Scanned by CamScanner

$$= \frac{\log[0.585/9]}{2(-0.174)}$$

$$= \frac{-1.187}{-0.348}$$

$$N \simeq 4$$

$$H_4(s) = \frac{1}{(s-s_0)(s-s_1)(s-s_2)(s-s_3)}$$

$$H_4(s) = \frac{1}{(s^2+0.7656s+1)(s^2+1.847765+1)}$$

Replace $s \to \frac{s}{\Omega_c}$

$$\Omega_c = \frac{\Omega_p}{(10^{-k_p/10}-1)^{1/2N}}$$

$$= \frac{20}{(10^{2/10}-1)^{1/8}}$$

$$= \frac{20}{0.935}$$

$$= 21.390$$

$$H_a(s) = H_4(s)\Big|_{\frac{s}{\Omega_c}=s}$$

$$= \frac{1}{\left(\left(\frac{s}{21.39}\right)^2+0.7656\left(\frac{s}{21.39}\right)+1\right)\left(\left(\frac{s}{21.39}\right)^2+1.84776\left(\frac{s}{21.39}\right)+1\right)}$$

Scanned by CamScanner

$$H_a(s) = \frac{209306.25}{(s^2+16.36s+457.5)(s^2+39.52s+457.5)}$$

4. A low pass butterworth filter has a gain of -3db at the edge of its passband, at 1khz, and a stopband attenuation of 30db at 12khz. Find H(z), the difference equation, if the sampling rate is 25 khz.

<u>solution</u>:

Given: $K_p = -3dB$

$K_s = -30dB$

$f_p = 3KHz$

$f_s = 12 kHz$

$F_s = 25kHz$

$$\omega_p = \frac{2\pi 1000 \text{ rad}}{25 \times 1000} = \frac{6.28}{25} \text{ rad} = 0.2512 \text{ rad}$$

$$\omega_s = \frac{2\pi \times 12 \times 1000}{25 \times 1000} = \frac{75.36}{25} = 3.0144 \text{ rad}$$

Apply pre warping effect,

$$\Omega_1 = \frac{2}{T} \tan\left(\frac{\omega_p}{2}\right) = 2(25)(1000) \tan\left(\frac{0.2512}{2}\right)$$

Scanned by CamScanner

$= 50000 \tan(0.1256)$

$= 50000 \times 2.192 \times 10^{-3}$

$\Omega_1 = 109.6$ rad/sec

$\Omega_2 = \frac{2}{T} \tan\left(\frac{\omega_s}{2}\right)$

$= 2(25000) \tan\left(\frac{3.0144}{2}\right)$

$\Omega_2 = 1305$ rad/sec

$$N = \frac{\log\left[\left(10^{-k_p/10} - 1\right) / \left(10^{-k_s/10} - 1\right)\right]}{2 \log\left(\frac{\Omega_p'}{\Omega_s'}\right)}$$

$\Omega_p' = 1 \qquad \Omega_s' = \frac{\Omega_s}{\Omega_p}$

$$= \frac{\log\left[\left(10^{3/10} - 1\right) / \left(10^{30/10} - 1\right)\right]}{2 \log\left(\frac{109.6}{1305}\right)}$$

$$= \frac{+3.0012}{2.1516}$$

$N \simeq 2$

Scanned by CamScanner

$$H_2(s) = \frac{1}{s^2+\sqrt{2}s+1}$$

$$s \rightarrow \frac{s}{\Omega_c}$$

$$\Omega_c = \frac{\Omega_p}{\left[10^{-K_p/10}-1\right]^{1/2N}}$$

$$= \frac{109.6}{\left[10^{3/10}-1\right]^{1/4}} = \frac{109.6}{(0.99526)^{1/4}} = \frac{109.6}{0.9988}$$

$$\Omega_c = 109.73 \text{ rad/sec}$$

$$H_a(s) = H_2(s)\Big|_{s \rightarrow \frac{s}{109.73}}$$

$$= \frac{1}{\left(\frac{s}{109.73}\right)^2+\sqrt{2}\left(\frac{s}{109.73}\right)+1}$$

$$= \frac{12040.67}{s^2+155.18s+12040.67}$$

Now for digital filter

Replace s by $\frac{2}{T}\left[\frac{z-1}{z+1}\right]$

$$s \rightarrow \frac{2}{T}\left[\frac{z-1}{z+1}\right]$$

Scanned by CamScanner

$$= \frac{12040.67}{(2\times 25000)^2\left(\frac{z-1}{z+1}\right)^2 + 155.18\times 2\times 25000\left(\frac{z-1}{z+1}\right) + 12040.67}$$

$$= \frac{12040.67(z+1)^2}{25\times 10^8(z^2-2z+1) + 7759000(z^2-1) + 12040.67(z^2+2z+1)}$$

$$= \frac{12040.67z^2 + 24081.34z + 12040.67}{z^2(2.50\times 7\times 10^9) - z(4.99\times 10^9) + 2.49\times 10^3}$$

$$= \frac{z^2\left[12040.67z^{-2} + 24081.34z^{-1} + 12040.67\right]}{z^2\left[2.49\times 10^9 z^{-2} - 4.99\times 10^9 z^{-1} + 2.5077\times 10^3\right]}$$

$$H(z) = \frac{Y(z)}{X(z)} = \frac{12040.67z^{-2} + 24081.34z^{-1} + 12040.67}{2.49\times 10^9 z^{-2} - 4.99\times 10^9 z^{-1} + 2.5077\times 10^9}$$

$$Y(z)\left[2.49\times 10^9 z^{-2} - 4.99\times 10^9 z^{-1} + 2.5077\times 10^9\right] =$$
$$X(z)\left[12040.67z^{-2} + 24081.34z^{-1} + 12040.67\right]$$

Required difference equation :

$$2.49\times 10^9 y(n-2) - 4.99\times 10^9 y(n-1) + 2.5077\times 10^9 y(n)$$
$$= 12040.67x(n-2) + 24081.34x(n-1) + 12040.67x(n)$$

Scanned by CamScanner

5. Obtain the Direct form - I, Direct form - II and cascade realizations for a digital IIR filter described by the system function

$$H(z) = \frac{8z^3 - 4z^2 + 11z - 2}{\left(z - \frac{1}{4}\right)\left(z^2 - z + \frac{1}{2}\right)}$$

Solution :

$$H(z) = \frac{8z^3 - 4z^2 + 11z - 2}{\left(z - \frac{1}{4}\right)\left(z^2 - z + \frac{1}{2}\right)}$$

$$= \frac{8z^3 - 4z^2 + 11z - 2}{z^3 - \frac{5}{4}z^2 + \frac{3}{4}z - \frac{1}{8}}$$

$$H(z) = \frac{Y(z)}{X(z)} = \frac{8 - 4z^{-1} + 11z^{-2} - 2z^{-3}}{1 - \frac{5}{4}z^{-1} + \frac{3}{4}z^{-2} - \frac{1}{8}z^{-3}}$$

$$Y(z) - \frac{5}{4}z^{-1}Y(z) + \frac{3}{4}z^{-2}Y(z) - \frac{1}{8}z^{-3}Y(z) = 8X(z) - 4z^{-1}X(z) + 11z^{-2}X(z) - 2z^{-3}X(z)$$

$$y(n) - \frac{5}{4}y(n-1) + \frac{3}{4}y(n-2) - \frac{1}{8}y(n-3) = 8x(n) - 4x(n-1) + 11x(n-2) - 2x(n-3)$$

Scanned by CamScanner

$$y(n) = 8x(n) - 4x(n-1) + 11x(n-2) - 2x(n-3) + \frac{5}{4}y(n-1) - \frac{3}{4}y(n-2) + \frac{1}{8}y(n-3)$$

Direct form - I

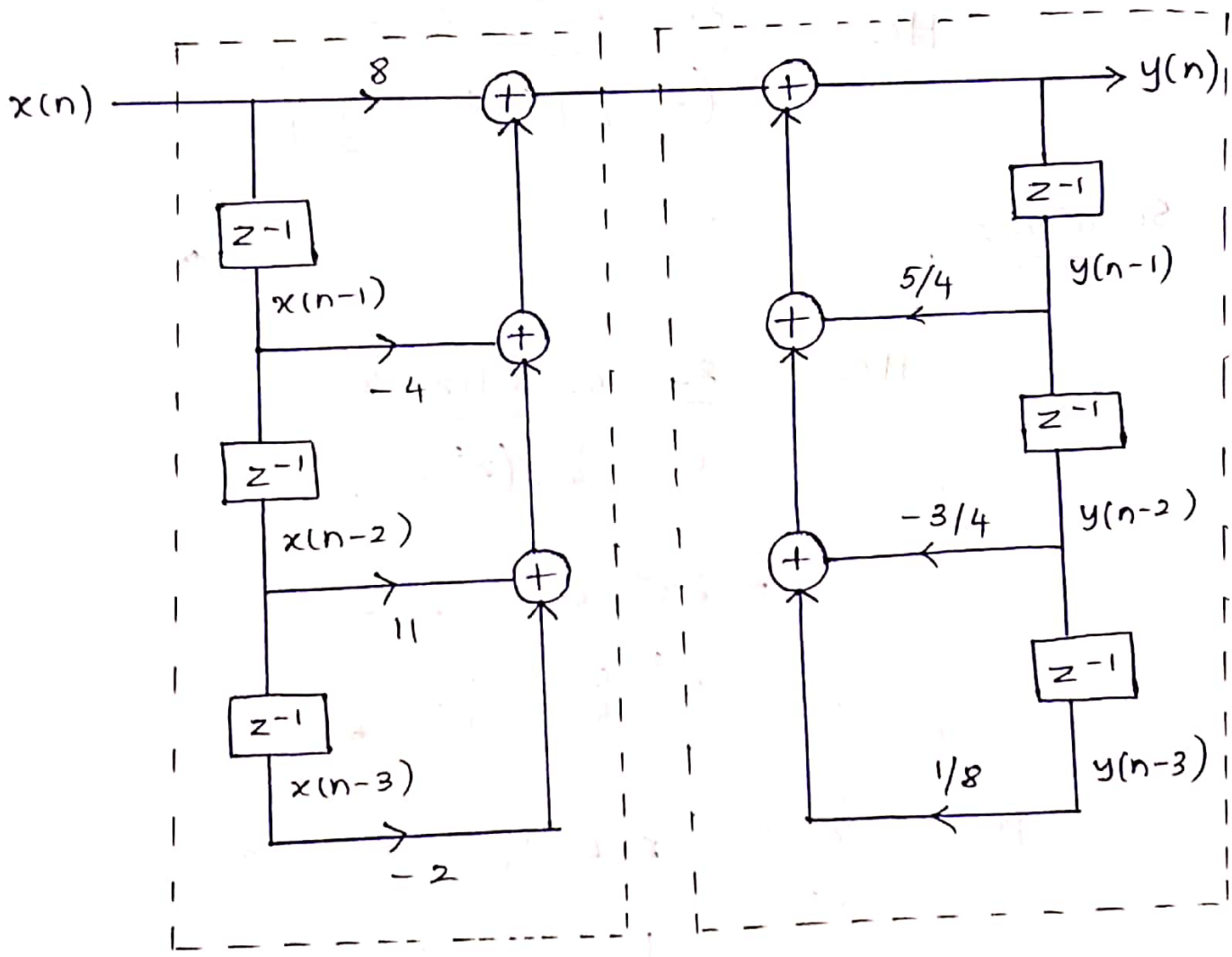

All zeros system

All poles system

Direct form - II

$$\frac{Y(z)}{X(z)} = \frac{Y(z)}{V(z)} \cdot \frac{V(z)}{X(z)}$$

$$H(z) = \frac{8 - 4z^{-1} + 11z^{-2} - 2z^{-3}}{1 - \frac{5}{4}z^{-1} + \frac{3}{4}z^{-2} - \frac{1}{8}z^{-3}}$$

Scanned by CamScanner

$$\frac{V(z)}{X(z)} = \frac{1}{1-\frac{5}{4}z^{-1}+\frac{3}{4}z^{-2}-\frac{1}{8}z^{-3}} \quad \text{— (1)}$$

$$\frac{Y(z)}{V(z)} = 8-4z^{-1}+11z^{-2}-2z^{-3} \quad \text{— (2)}$$

$$V(z)-\frac{5}{4}z^{-1}V(z)+\frac{3}{4}z^{-2}V(z)-\frac{1}{8}z^{-3}V(z) = X(z)$$

$$V(n)-\frac{5}{4}V(n-1)+\frac{3}{4}V(n-2)-\frac{1}{8}V(n-3) = x(n)$$

$$V(n) = x(n)+\frac{5}{4}V(n-1)-\frac{3}{4}V(n-2)+\frac{1}{8}V(n-3) \quad \text{— (3)}$$

$$Y(z) = 8V(z)-4z^{-1}V(z)+11z^{-2}V(z)-2z^{-3}V(z)$$

$$y(n) = 8V(n)-4V(n-1)+11V(n-2)-2V(n-3) \quad \text{— (4)}$$

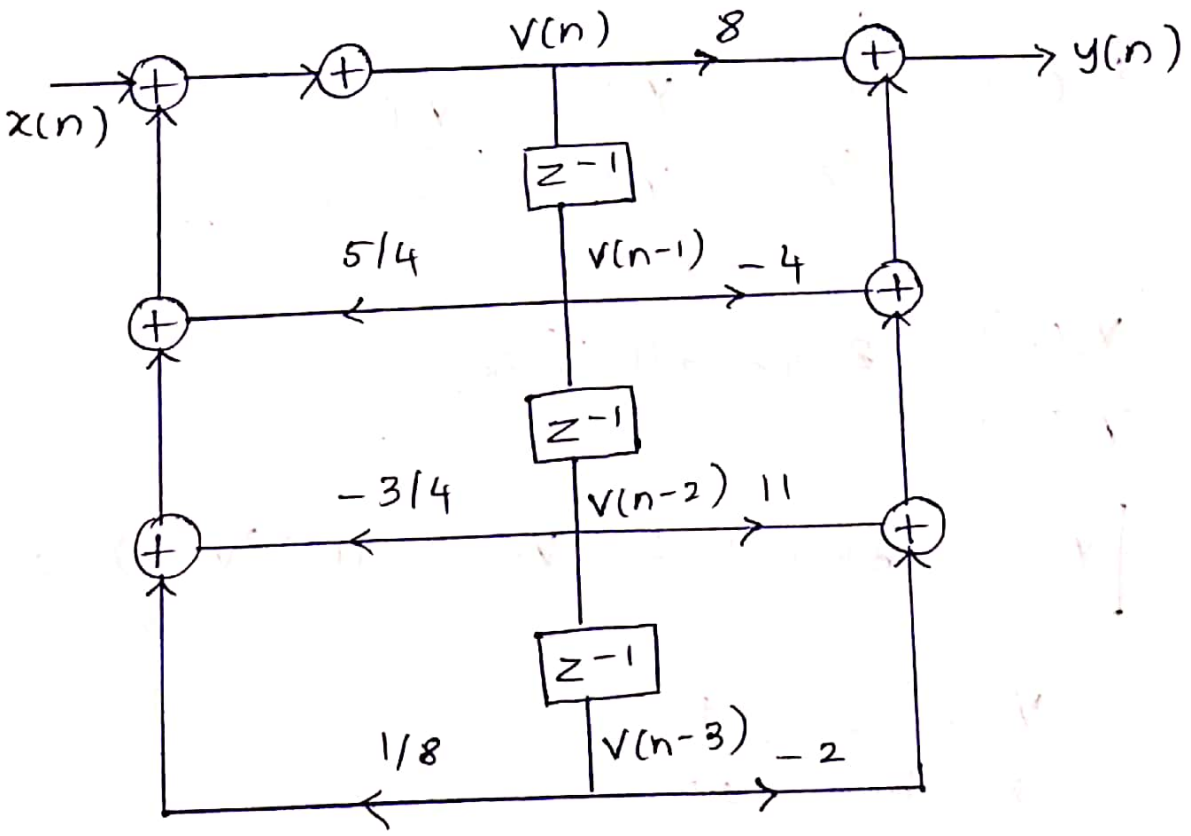

Scanned by CamScanner

Cascade

$$H(z) = \frac{Y(z)}{X(z)} = \frac{8 - 4z^{-1} + 11z^{-2} - 2z^{-3}}{1 - \frac{5}{4}z^{-1} + \frac{3}{4}z^{-2} - \frac{1}{8}z^{-3}}$$

$$H(z) = \frac{8 - 4z^{-1} + 11z^{-2} - 2z^{-3}}{\left(1 - z^{-1} + \frac{z^{-2}}{2}\right)\left(1 - \frac{z^{-1}}{4}\right)}$$

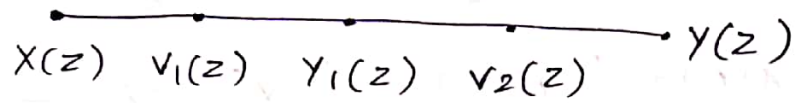

$$H_1(z) = \frac{8 - 4z^{-1} + 11z^{-2} - 2z^{-3}}{\left(1 - \frac{z^{-1}}{4}\right)}, \quad H_2(z) = \frac{1}{1 - z^{-1} + \frac{z^{-2}}{2}}$$

$$H_1(z) = \frac{Y_1(z)}{X(z)} = \frac{Y_1(z)}{V_1(z)} \cdot \frac{V_1(z)}{X(z)}$$

$$\frac{Y_1(z)}{V_1(z)} = 8 - 4z^{-1} + 11z^{-2} - 2z^{-3}$$

$$\boxed{Y_1(z) = 8V_1(z) - 4z^{-1}V_1(z) + 11z^{-2}V_1(z) - 2z^{-3}V_1(z)} \quad (1)$$

$$\frac{V_1(z)}{X(z)} = \frac{1}{1 - \frac{z^{-1}}{4}}$$

$$\boxed{V_1(z) = X(z) + \frac{z^{-1}}{4}V_1(z)} \quad (2)$$

Scanned by CamScanner

$$H_2(z) = \frac{Y(z)}{Y_1(z)} = \frac{Y(z)}{V_2(z)} \cdot \frac{V_2(z)}{Y_1(z)}$$

$$\frac{V_2(z)}{Y_1(z)} = \frac{1}{1 - \frac{z^{-1}}{4}}$$

$$V_2(z) = Y_1(z) + \frac{z^{-1}}{4} V_2(z) \quad \text{— (3)}$$

$$\frac{Y(z)}{V_2(z)} = 1$$

$$Y(z) = V_2(z) \quad \text{— (4)}$$

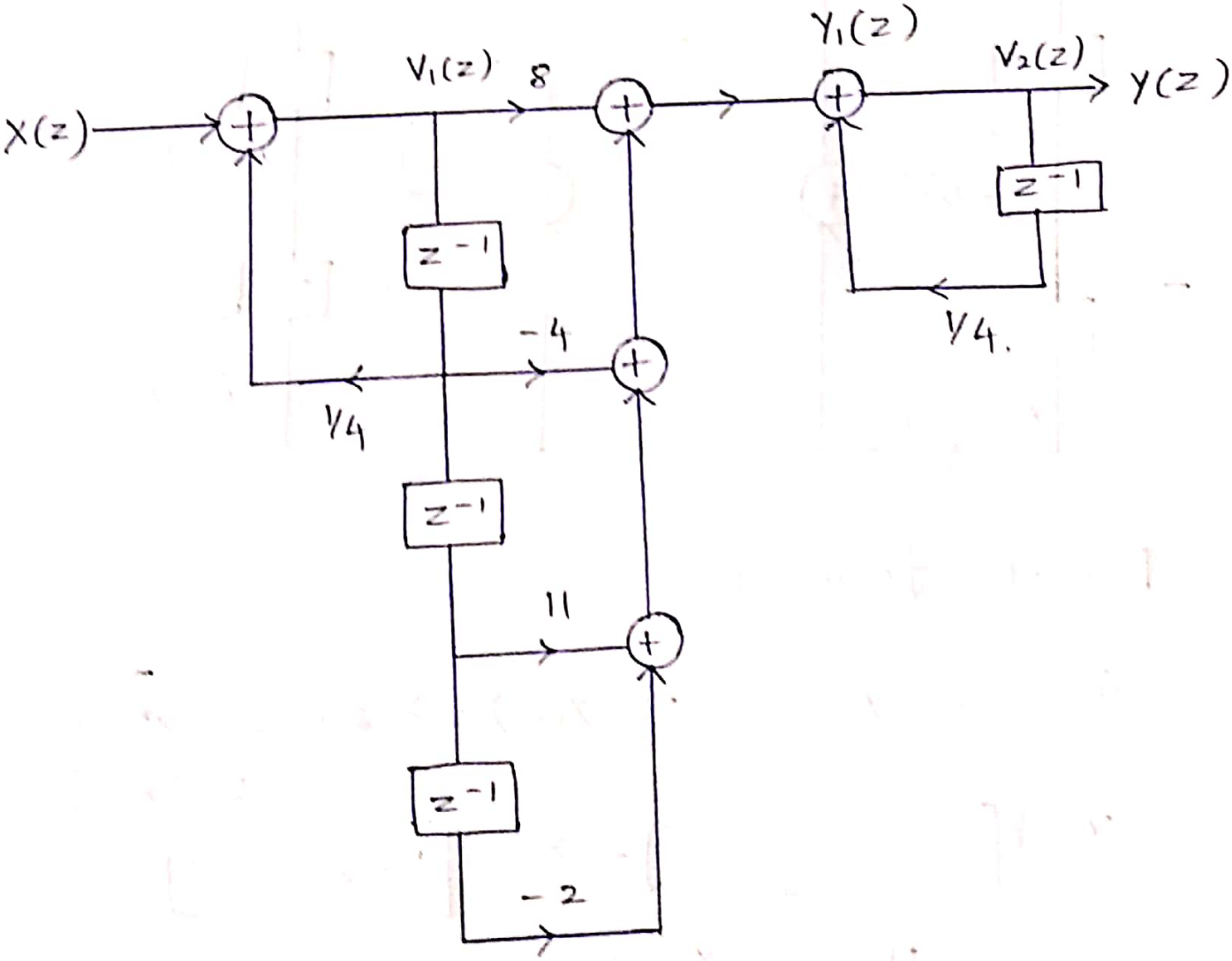

Scanned by CamScanner

6. Obtain the Direct form-I, Direct form-II, cascade, and parallel for the following system

$$y(n) = y(n-1) - \frac{1}{2} y(n-2) + x(n) - x(n-1) + x(n-2)$$

Solution:

$$y(n) = y(n-1) - \frac{1}{2} y(n-2) + x(n) - x(n-1) + x(n-2)$$

Direct form - I

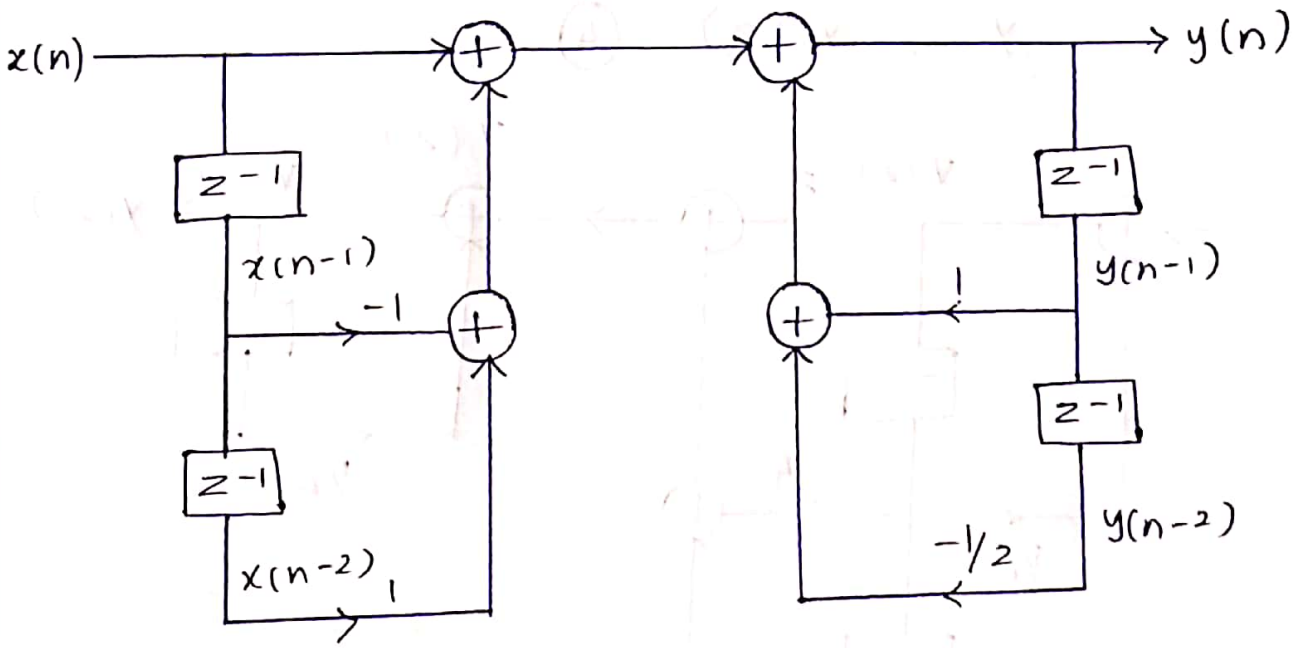

Direct form - II

$$Y(z) = z^{-1} Y(z) - \frac{1}{2} z^{-2} Y(z) + X(z) - z^{-1} X(z) + z^{-2} X(z)$$

$$Y(z)\left[1 - z^{-1} + \frac{1}{2} z^{-2}\right] = X(z)\left[1 - z^{-1} - z^{-2}\right]$$

$$H(z) = \frac{Y(z)}{X(z)} = \frac{1 - z^{-1} - z^{-2}}{1 - z^{-1} + \frac{1}{2} z^{-2}}$$

Scanned by CamScanner

$$\frac{Y(z)}{X(z)} = \frac{Y(z)}{V(z)} \cdot \frac{V(z)}{X(z)}$$

$$\frac{V(z)}{X(z)} = \frac{1}{1 - z^{-1} + \frac{1}{2} z^{-2}} \quad \text{— (1)}$$

$$\frac{Y(z)}{V(z)} = 1 - z^{-1} - z^{-2} \quad \text{— (2)}$$

$$V(z) - z^{-1} V(z) + \frac{1}{2} z^{-2} V(z) = X(z)$$

$$v(n) - v(n-1) + \frac{1}{2} v(n-2) = x(n)$$

$$v(n) = x(n) + v(n-1) - \frac{1}{2} v(n-2) \quad \text{— (3)}$$

$$Y(z) = V(z) - z^{-1} V(z) - z^{-2} V(z)$$

$$y(n) = v(n) - v(n-1) - v(n-2) \quad \text{— (4)}$$

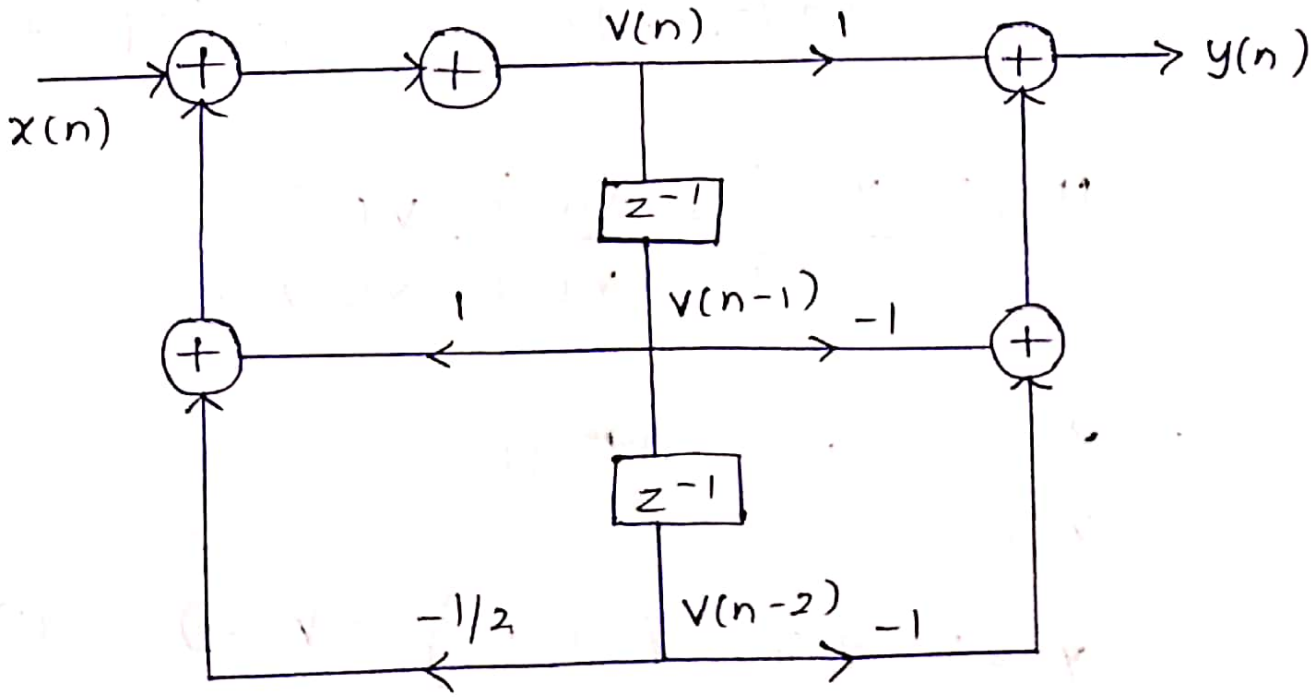

Scanned by CamScanner

Cascade

$$H(z) = \frac{1 - z^{-1} - z^{-2}}{1 - z^{-1} + \frac{1}{2} z^{-2}}$$

$$H(z) = H_1(z) \cdot H_2(z)$$

$$H(z) = \frac{\left(1 + \left(\frac{-1+\sqrt{5}}{2}\right) z^{-1}\right)\left(1 + \left(\frac{-1-\sqrt{5}}{2}\right) z^{-1}\right)}{\left(1 + \left(\frac{-1+j}{2}\right) z^{-1}\right)\left(1 + \left(\frac{-1-j}{2}\right) z^{-1}\right)}$$

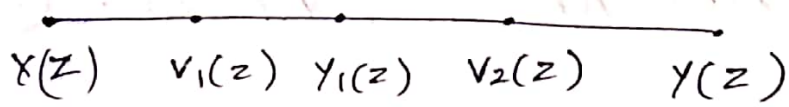

$$H_1(z) = \frac{\left(1 + \left(\frac{-1+\sqrt{5}}{2}\right) z^{-1}\right)}{\left(1 + \left(\frac{-1+j}{2}\right) z^{-1}\right)}, \quad H_2(z) = \frac{\left(1 + \left(\frac{-1-\sqrt{5}}{2}\right) z^{-1}\right)}{\left(1 + \left(\frac{-1-j}{2}\right) z^{-1}\right)}$$

$$H_1(z) = \frac{Y_1(z)}{X(z)} = \frac{Y_1(z)}{V_1(z)} \cdot \frac{V_1(z)}{X(z)}$$

$$\frac{Y_1(z)}{V_1(z)} = 1 + \left(\frac{-1+\sqrt{5}}{2}\right) z^{-1}$$

$$Y_1(z) = V_1(z) + \left(\frac{-1+\sqrt{5}}{2}\right) z^{-1} V_1(z) \quad \text{— (1)}$$

Scanned by CamScanner

$$\frac{V_1(z)}{X(z)} = \frac{1}{1+\left(\frac{-1+j}{2}\right)z^{-1}}$$

$$V_1(z) = X(z) - \left(\frac{-1+j}{2}\right)z^{-1}V_1(z) \quad \text{— (2)}$$

$$H_2(z) = \frac{Y(z)}{Y_1(z)} = \frac{Y(z)}{V_2(z)} \cdot \frac{V_2(z)}{Y_1(z)}$$

$$\frac{V_2(z)}{Y_1(z)} = \frac{1}{1+\left(\frac{-1-j}{2}\right)z^{-1}}$$

$$V_2(z) = Y_1(z) + \left(\frac{1+j}{2}\right)z^{-1}V_2(z) \quad \text{— (3)}$$

$$\frac{Y(z)}{V_2(z)} = 1+\left(\frac{-1-\sqrt{5}}{2}\right)z^{-1}$$

$$Y(z) = V_2(z) - \left(\frac{1+\sqrt{5}}{2}\right)z^{-1}V_2(z) \quad \text{— (4)}$$

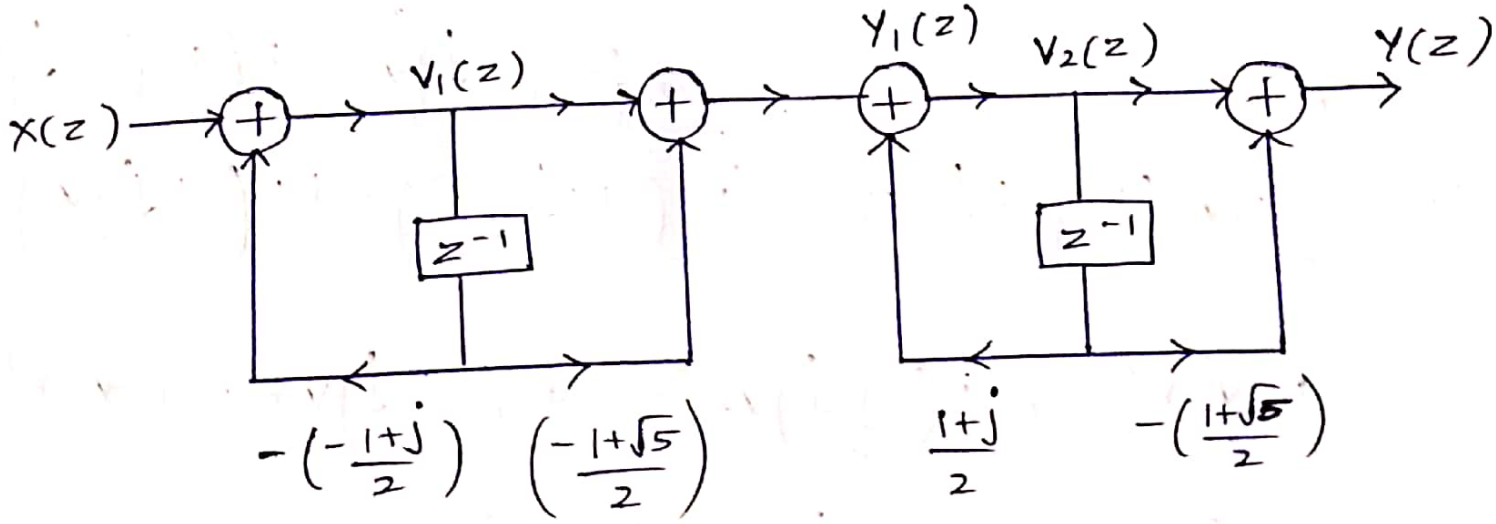

Scanned by CamScanner

Parallel

$$H(z) = \frac{1 - z^{-1} - z^{-2}}{1 - z^{-1} + \frac{1}{2} z^{-2}}$$

$$= \frac{\left(1 + \left(-\frac{1+\sqrt{5}}{2}\right) z^{-1}\right)\left(1 + \left(\frac{-1-\sqrt{5}}{2}\right) z^{-1}\right)}{\left(1 + \left(-\frac{1+j}{2}\right) z^{-1}\right)\left(1 + \left(\frac{-1-j}{2}\right) z^{-1}\right)}$$

$$= \frac{A}{1 + \left(\frac{-1+j}{2}\right) z^{-1}} + \frac{B}{1 + \left(\frac{-1-j}{2}\right) z^{-1}}$$

Let $z^{-1} = v$

$$\frac{1 - v - v^2}{\left(1 + \left(\frac{-1+j}{2}\right) v\right)\left(1 + \left(\frac{-1-j}{2}\right) v\right)} = \frac{A}{1 + \left(\frac{-1+j}{2}\right) v} + \frac{B}{1 + \left(\frac{-1-j}{2}\right) v}$$

$$\frac{1 - v - v^2}{\left(1 + \left(\frac{-1+j}{2}\right) v\right)\left(1 + \left(\frac{-1-j}{2}\right) v\right)} = \frac{A\left(1 + \left(\frac{-1-j}{2}\right) v\right) + B\left(1 + \left(\frac{-1+j}{2}\right) v\right)}{\left(1 + \left(\frac{-1+j}{2}\right) v\right)\left(1 + \left(\frac{-1-j}{2}\right) v\right)}$$

$$1 - v - v^2 = A + \left(\frac{-1-j}{2}\right) v A + B + \left(\frac{-1+j}{2}\right) v B = 1 - v - v^2$$

$$A + B = 1 \quad , \quad \left(\frac{-1-j}{2}\right) A + \left(\frac{-1+j}{2}\right) B = -1$$

$$B = 1 - A$$

Scanned by CamScanner

$$\left(\frac{-1-j}{2}\right)A + \left(\frac{-1+j}{2}\right)(1-A) = -1$$

$$\left[-\frac{1}{2} - \frac{j}{2} + \frac{1}{2} - \frac{j}{2}\right]A = -1 + \frac{1}{2} - \frac{j}{2}$$

$$\left[-\frac{2j}{2}\right]A = -\frac{1}{2} - \frac{j}{2}$$

$$jA = \frac{1+j}{2}$$

$$A = \frac{1+j}{2j} = \frac{j}{2j^2} + \frac{1}{2} = -\frac{j}{2} + \frac{1}{2}.$$

$$A = \frac{1-j}{2}$$

$$A + B = 1$$

$$B = 1 - A = 1 - \left(\frac{1-j}{2}\right) = \frac{2-1+j}{2} = \frac{1+j}{2}$$

$$B = \frac{1+j}{2}$$

$$H(z) = \frac{\left(\frac{1-j}{2}\right)}{1+\left(\frac{-1+j}{2}\right)z^{-1}} + \frac{\left(\frac{1+j}{2}\right)}{1+\left(\frac{-1-j}{2}\right)z^{-1}}$$

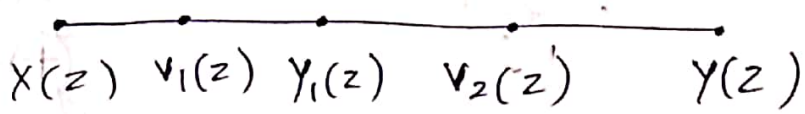

$$H_1(z) = \frac{Y_1(z)}{X(z)} = \frac{Y_1(z)}{V_1(z)} \cdot \frac{V_1(z)}{X(z)}$$

$$\frac{V_1(z)}{X(z)} = \frac{1}{1+\left(-\frac{1+j}{2}\right)z^{-1}}$$

Scanned by CamScanner

$$V_1(z) = X(z) + \left(\frac{1-j}{2}\right) z^{-1} V_1(z) \quad \text{— (1)}$$

$$\frac{Y_1(z)}{V_1(z)} = \frac{1-j}{2}$$

$$Y_1(z) = \left(\frac{1-j}{2}\right) V_1(z) \quad \text{— (2)}$$

$$H_2(z) = \frac{Y_2(z)}{X(z)} = \frac{Y_2(z)}{V_2(z)} \cdot \frac{V_2(z)}{X(z)}$$

$$\frac{V_2(z)}{X(z)} = \frac{1}{1 + \left(-\frac{1-j}{2}\right) z^{-1}}$$

$$V_2(z) = X(z) + \left(\frac{1+j}{2}\right) z^{-1} V_2(z) \quad \text{— (3)}$$

$$\frac{Y_2(z)}{V_2(z)} = \frac{1+j}{2}$$

$$Y_2(z) = \left(\frac{1+j}{2}\right) V_2(z) \quad \text{— (4)}$$

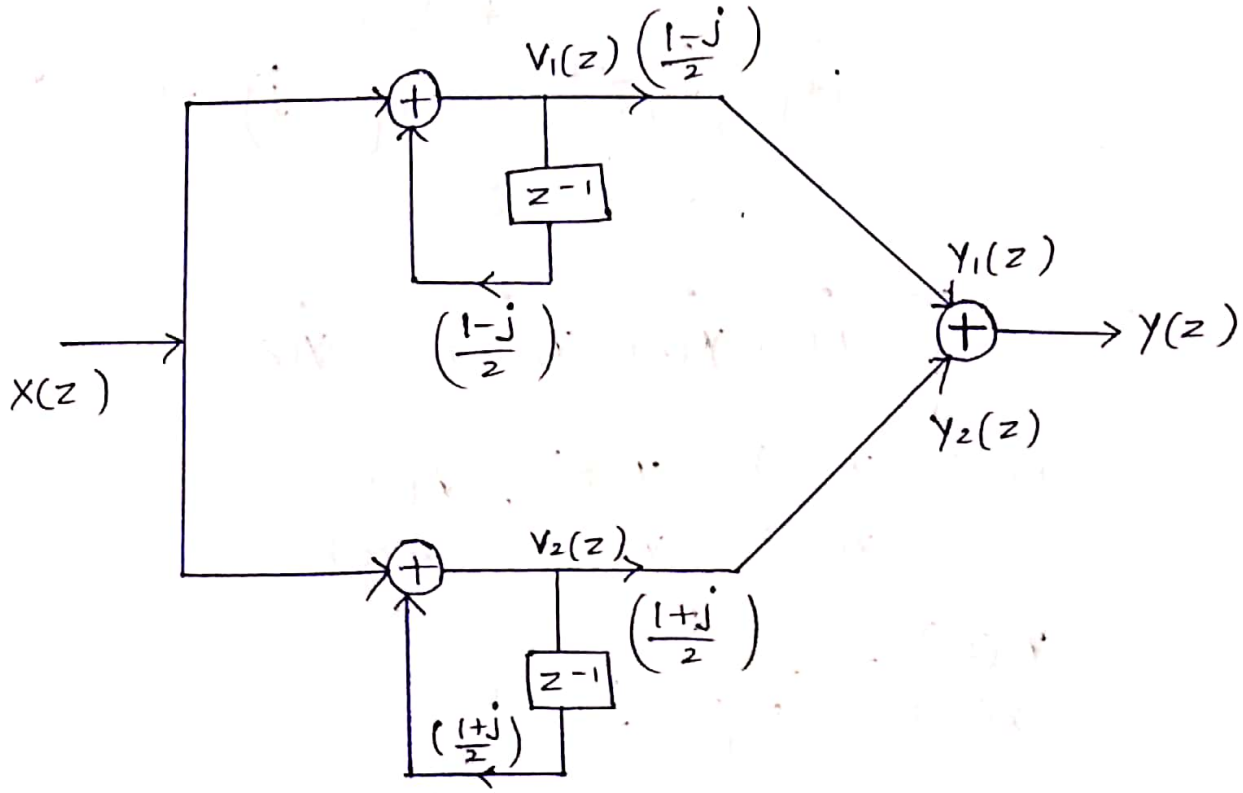

Scanned by CamScanner

7. For the constraints

$$0.8 \le |H(\omega)| \le 1 \qquad 0 \le \omega \le 0.25\pi$$
$$|H(\omega)| \le 0.1 \qquad 0.5\pi \le \omega \le \pi$$

Design a digital butterworth filter using T=1sec and the bilinear transformation.

Solution :

Given :

$$0.8 \le |H(\omega)| \le 1 \qquad 0 \le \omega \le 0.25\pi$$
$$|H(\omega)| \le 0.1 \qquad 0.5\pi \le \omega \le \pi$$

$$0.8 \le |H(\omega)| \le 1$$
$$1-\delta_p \le |H(\omega)| \le 1$$
$$|H(\omega)| \le 0.1$$
$$|H(\omega)| \le \delta_s$$

$$0 \le \omega \le 0.25\pi$$
$$0 \le \omega_p \le 0.25\pi$$
$$0.5\pi \le \omega \le \pi$$
$$0.5\pi \le \omega_s \le \pi$$

$K_p = 20\log(1-\delta_p)$ at $\omega_p = 0.25\pi$ rad

$= 20\log(0.8) = 20(-0.09691)$

$K_p = -1.938$ dB

$K_s = 20\log(\delta_s)$ at $\omega_s = 0.5\pi$ rad

Scanned by CamScanner

$= 20\log(0.1)$

$k_s = -20\,dB$

$$\Omega_p = \frac{2}{T}\tan\left(\frac{\omega_p}{2}\right)$$

$T = 1$

$$\Omega_p = 2\tan\left(\frac{0.25\pi}{2}\right) = 0.828 \text{ rad/sec}$$

$$\Omega_s = \frac{2}{T}\tan\left(\frac{\omega_s}{2}\right)$$

$T = 1$

$$\Omega_s = 2\tan\left(\frac{0.5\pi}{2}\right) = 2 \text{ rad/sec}$$

$$\Omega_p' = 1, \quad \Omega_s' = \frac{\Omega_s}{\Omega_p} = \frac{2}{0.828} = 2.415$$

$$N = \frac{\log\left[\left(10^{-k_p/10} - 1\right) \Big/ \left(10^{-k_s/10} - 1\right)\right]}{2\log\left(\frac{\Omega_p'}{\Omega_s'}\right)}$$

$$= \frac{\log\left[\left(10^{\frac{1.938}{10}} - 1\right) \Big/ \left(10^{2} - 1\right)\right]}{2\log\left(\frac{1}{2.415}\right)} = \frac{-2.2456}{-0.7658}$$

$= 2.93$

$N \simeq 3$

$$H_3(s) = \frac{1}{(s+1)(s^2+s+1)}$$

$$H_a(s) = H_3(s)\Big|_{s \to \frac{s}{\Omega_c}}$$

Scanned by CamScanner

$$\Omega_c = \frac{\Omega_p}{\left(10^{-K_p/10} - 1\right)^{1/2N}}$$

$$= \frac{0.828}{\left(10^{1.938/10} - 1\right)^{1/6}} = \frac{0.828}{0.9085}$$

$$\Omega_c = 0.9114 \text{ rad/sec}$$

$$H_a(s) = \frac{1}{\left(\frac{s}{0.9114} + 1\right)\left(\left(\frac{s}{0.9114}\right)^2 + \frac{s}{0.9114} + 1\right)}$$

$$H(z) = H_a(s)\Big|_{s \to \frac{2}{T}\left(\frac{z-1}{z+1}\right)}$$

$$T = 1$$

$$H(z) = \frac{1}{\left(\frac{2\left(\frac{z-1}{z+1}\right)}{0.9114} + 1\right)\left(\left(\frac{2\left(\frac{z-1}{z+1}\right)}{0.9114}\right)^2 + \frac{2\left(\frac{z-1}{z+1}\right)}{0.9114} + 1\right)}$$

---

8. For the constraints

$$0.8 \le |H(\omega)| \le 1 \qquad 0 \le \omega \le 0.5\pi$$

$$|H(\omega)| \le 0.1 \qquad 0.6\pi \le \omega \le \pi$$

Design a digital chebyshev filter using $T = 1$ sec and the bilinear transformation.

Scanned by CamScanner

Solution:

Given:

$0.8 \le |H(\omega)| \le 1 \qquad 0 \le \omega \le 0.5\pi$

$|H(\omega)| \le 0.1 \qquad 0.6\pi \le \omega \le \pi$

$0.8 \le |H(\omega)| \le 1$

$1-\delta_p \le |H(\omega)| \le 1$

$|H(\omega)| \le 0.1$

$|H(\omega)| \le \delta_s$

$0 \le \omega \le 0.5\pi$

$0 \le \omega_p \le 0.5\pi$

$0.6\pi \le \omega \le \pi$

$0.6\pi \le \omega_s \le \pi$

$K_p = 20\log(1-\delta_p)$ at $\omega_p = 0.5\pi$ rad

$= 20\log(0.8) = 20(-0.09691)$

$K_p = -1.938\,dB$

$1-\delta_p = 0.8$

$\delta_p = 0.2$

$K_s = 20\log(\delta_s) = 20\log(0.1)$ at $\omega_s = 0.6\pi$ rad

$K_s = -20\,dB$

$\delta_s = 0.1$

$\Omega_p = \frac{2}{T}\tan\left(\frac{\omega_p}{2}\right)$

$T = 1$

Scanned by CamScanner

$$= 2\tan\left(\frac{0.5\pi}{2}\right)$$

$$\Omega_p = 2 \text{ rad/sec}$$

$$\Omega_s = \frac{2}{T}\tan\left(\frac{\omega_s}{2}\right)$$

$$T = 1$$

$$= 2\tan\left(\frac{0.6\pi}{2}\right)$$

$$\Omega_s = 2.752 \text{ rad/sec}$$

$$\Omega_p' = 1 \quad , \quad \Omega_s' = \frac{\Omega_s}{\Omega_p} = \frac{2.752}{2} = 1.376$$

Discrimination factor, $d = \sqrt{\dfrac{(1-\delta_p)^{-2}-1}{\delta_s^{-2}-1}}$

$$d = \sqrt{\frac{(0.8)^{-2}-1}{(0.1)^{-2}-1}} = \sqrt{\frac{0.5625}{99}}$$

$$d = 0.0753$$

Selectivity factor, $K = \dfrac{\Omega_p'}{\Omega_s'} = \dfrac{1}{1.376}$

$$K = 0.7267$$

$$N = \frac{\cosh^{-1}(1/d)}{\cosh^{-1}(1/K)} = \frac{\cosh^{-1}(1/0.0753)}{\cosh^{-1}(1/0.7267)}$$

$$= \frac{\cosh^{-1}(13.28)}{\cosh^{-1}(1.376)} = \frac{\ln\left(13.28+\sqrt{(13.28)^2-1}\right)}{\ln\left(1.376+\sqrt{(1.376)^2-1}\right)}$$

Scanned by CamScanner

$$= \frac{3.2779}{0.84208} = 3.89$$

$N \simeq 4$

$$K_p = 20\log\left[\frac{1}{\sqrt{1+\epsilon^2}}\right] = -1.938$$

$$\log\left[\frac{1}{\sqrt{1+\epsilon^2}}\right] = -0.0969$$

$$\frac{1}{\sqrt{1+\epsilon^2}} = 0.8$$

$$\sqrt{1+\epsilon^2} = 1.25$$

$$\epsilon = 0.75$$

$$a = \frac{1}{2}\left(\frac{1+\sqrt{1+\epsilon^2}}{\epsilon}\right)^{1/N} - \frac{1}{2}\left(\frac{1+\sqrt{1+\epsilon^2}}{\epsilon}\right)^{-1/N}$$

$$= \frac{1}{2}\left(\frac{1+\sqrt{1+(0.75)^2}}{0.75}\right)^{1/4} - \frac{1}{2}\left(\frac{1+\sqrt{1+(0.75)^2}}{0.75}\right)^{-1/4}$$

$$= 0.6580 - 0.3799$$

$$a = 0.278$$

$$b = \frac{1}{2}\left(\frac{1+\sqrt{1+\epsilon^2}}{\epsilon}\right)^{1/N} + \frac{1}{2}\left(\frac{1+\sqrt{1+\epsilon^2}}{\epsilon}\right)^{-1/N}$$

$$= \frac{1}{2}\left(\frac{1+\sqrt{1+(0.75)^2}}{0.75}\right)^{1/4} + \frac{1}{2}\left(\frac{1+\sqrt{1+(0.75)^2}}{0.75}\right)^{-1/4}$$

Scanned by CamScanner

$= 0.6580 + 0.3799$

$b = 1.038$

$S_k = \sigma_k + j\Omega_k$

$\sigma_k = -a\sin\left[(2k-1)\frac{\pi}{2N}\right]$

$\Omega_k = b\cos\left[(2k-1)\frac{\pi}{2N}\right]$

k	σ_k	Ω_k	S_k
1	-0.106	0.959	$-0.106 + j0.959$
2	-0.256	0.397	$-0.256 + j0.397$
3	-0.256	-0.397	$-0.256 - j0.397$
4	-0.106	-0.959	$-0.106 - j0.959$

$$H_4(s) = \frac{K_N}{(s-s_1)(s-s_2)(s-s_3)(s-s_4)}$$

$$= \frac{K_N}{(s+0.106-j0.959)(s+0.256-j0.397)(s+0.256+j0.397)(s+0.106+j0.959)}$$

$$= \frac{K_N}{s^4+0.716s^3+1.256s^2+0.516s+0.2057}$$

Scanned by CamScanner

$$K_N = \frac{b_0}{\sqrt{1+\epsilon^2}} \quad (\because N=4 \text{ is even})$$

$$K_N = \frac{0.2057}{\sqrt{1+(0.75)^2}} = \frac{0.2057}{1.25} = 0.1645$$

$$H_4(s) = \frac{0.1645}{s^4+0.716s^3+1.256s^2+0.516s+0.2057}$$

$$\Omega_c = \frac{\Omega_p}{\left(10^{-K_p/10}-1\right)^{1/2N}} = \frac{2}{\left(10^{1.938/10}-1\right)^{1/8}}$$

$$\Omega_c = \frac{2}{0.9305} = 2.149 \text{ rad/sec}$$

$$H_a(s) = H_4(s)\Big|_{s \to \frac{s}{2.149}}$$

$$H_a(s) = \frac{0.1645}{\left(\frac{s}{2.149}\right)^4+0.716\left(\frac{s}{2.149}\right)^3+1.256\left(\frac{s}{2.149}\right)^2+0.516\left(\frac{s}{2.149}\right)+0.2057}$$

$$H(z) = H_a(s)\Big|_{s \to \frac{2}{T}\left(\frac{z-1}{z+1}\right)}$$

$T=1$

$$H(z) = \frac{0.1645}{\left(\frac{2\left(\frac{z-1}{z+1}\right)}{2.149}\right)^4+0.716\left(\frac{2\left(\frac{z-1}{z+1}\right)}{2.149}\right)^3+1.256\left(\frac{2\left(\frac{z-1}{z+1}\right)}{2.149}\right)^2+0.516\left(\frac{2\left(\frac{z-1}{z+1}\right)}{2.149}\right)+0.2057}$$

Scanned by CamScanner

10. Design a Butterworth filter that has a 3 db cutoff frequency of 1.5 KHz and an attenuation of 40 db at 3 KHz.

Solution :

$$K_p = -3\,dB$$

$$\Omega_p = 2\times\pi\times 1.5\,KHz = 2\times\pi\times 1.5\times 10^3$$

$$\Omega_p = 9.42\times 10^3\ rad/sec$$

$$K_s = -40\,dB$$

$$\Omega_s = 2\times\pi\times 3\,KHz = 2\times\pi\times 3\times 10^3$$

$$\Omega_s = 18.84\times 10^3\ rad/sec$$

$$\Omega_p' = 1,\quad \Omega_s' = \frac{\Omega_s}{\Omega_p} = \frac{18.84\times 10^3}{9.42\times 10^3} = 2$$

$$N = \frac{\log\left[\left(10^{-K_p/10}-1\right)/\left(10^{-K_s/10}-1\right)\right]}{2\log\left(\frac{\Omega_p'}{\Omega_s'}\right)}$$

$$= \frac{\log\left[\left(10^{3/10}-1\right)/\left(10^{40/10}-1\right)\right]}{2\log\left(\frac{1}{2}\right)}$$

$$= \frac{\log\left[\left(10^{0.3}-1\right)/\left(10^{4}-1\right)\right]}{2\log(0.5)} = \frac{-4.002}{-0.602}$$

Scanned by CamScanner

$= 6.6478$

$N \simeq 7$

$$H_7(s) = \frac{1}{(s+1)(s^2+0.445s+1)(s^2+1.247s+1)(s^2+1.8019s+1)}$$

$$H_a(s) = H_7(s)\Big|_{s \to \frac{s}{\Omega_c}}$$

$$\Omega_c = \frac{\Omega_p}{\left(10^{-K_p/10}-1\right)^{1/2N}} = \frac{9.42\times10^3}{\left(10^{3/10}-1\right)^{1/14}} = \frac{9.42\times10^3}{\left(10^{0.3}-1\right)^{1/14}}$$

$$\Omega_c = \frac{9.42\times10^3}{0.9996} = 9.423\times10^3 \text{ rad/sec}$$

$$H_a(s) = \frac{1}{\left(\frac{s}{9.423\times10^3}+1\right)\left(\left(\frac{s}{9.423\times10^3}\right)^2+0.445\left(\frac{s}{9.423\times10^3}\right)+1\right)\left(\left(\frac{s}{9.423\times10^3}\right)^2+1.247\left(\frac{s}{9.423\times10^3}\right)+1\right)\left(\left(\frac{s}{9.423\times10^3}\right)^2+1.8019\left(\frac{s}{9.423\times10^3}\right)+1\right)}$$

Scanned by CamScanner

11. Use the bilinear transformation to design a discrete time Chebyshev high pass filter with an equiripple passband with

$$0 \le |H(\omega)| \le 0.1 \qquad 0 \le |\omega| \le 0.1\pi$$

$$0.9 \le |H(\omega)| \le 1 \qquad 0.3\pi \le |\omega| \le \pi$$

Solution :

Given :

$$0 \le |H(\omega)| \le 0.1 \qquad 0 \le |\omega| \le 0.1\pi$$

$$0.9 \le |H(\omega)| \le 1 \qquad 0.3\pi \le |\omega| \le \pi$$

$$0 \le |H(\omega)| \le 0.1$$

$$0 \le |H(\omega)| \le \delta_s$$

$$0.9 \le |H(\omega)| \le 1$$

$$1 - \delta_p \le |H(\omega)| \le 1$$

$$0 \le |\omega| \le 0.1\pi$$

$$0 \le |\omega| \le \omega_s$$

$$0.3\pi \le |\omega| \le \pi$$

$$\omega_p \le |\omega| \le \pi$$

$$1 - \delta_p = 0.9$$

$$\delta_p = 0.1 \qquad \omega_p = 0.3\pi \text{ rad}$$

$$\delta_s = 0.1 \qquad \omega_s = 0.1\pi \text{ rad}$$

Scanned by CamScanner

$$\Omega_p = \frac{2}{T}\tan\left(\frac{\omega_p}{2}\right)$$

$T = 1$

$$\Omega_p = 2\tan\left(\frac{0.3\pi}{2}\right) = 1.019 \text{ rad/sec}$$

$$\Omega_s = \frac{2}{T}\tan\left(\frac{\omega_s}{2}\right)$$

$T = 1$

$$\Omega_s = 2\tan\left(\frac{0.1\pi}{2}\right) = 0.316 \text{ rad/sec}$$

$$\Omega_p' = 1 \quad , \quad \Omega_s' = \frac{\Omega_p}{\Omega_s} = \frac{1.019}{0.316} = 3.22$$

$$K_p = 20\log(1-\delta_p) = 20\log(0.9) = -0.915\,dB$$

$$K_s = 20\log(\delta_s) = 20\log(0.1) = -20\,dB$$

$$K_p = 20\log\left(\frac{1}{\sqrt{1+\epsilon^2}}\right) = -0.915$$

$$\frac{1}{\sqrt{1+\epsilon^2}} = 10^{-0.0457}$$

$$\frac{1}{\sqrt{1+\epsilon^2}} = 0.9001$$

$$\sqrt{1+\epsilon^2} = 1.1109$$

$$\epsilon = 0.48$$

Discrimination factor, $d = \sqrt{\dfrac{(1-\delta_p)^{-2}-1}{\delta_s^{-2}-1}}$

Scanned by CamScanner

$$d = \sqrt{\frac{1-(0.1)^{-2}-1}{(0.1)^{-2}-1}} = \sqrt{\frac{0.2345}{99}} = 0.0486$$

Selectivity factor, $K = \frac{\Omega_p'}{\Omega_s'} = \frac{1}{3.22} = 0.3105$

$$N = \frac{\cosh^{-1}(1/d)}{\cosh^{-1}(1/K)} = \frac{\cosh^{-1}\left(\frac{1}{0.0486}\right)}{\cosh^{-1}\left(\frac{1}{0.3105}\right)}$$

$$= \frac{\cosh^{-1}(20.576)}{\cosh^{-1}(3.221)} = \frac{\ln\left(20.576+\sqrt{(20.576)^2-1}\right)}{\ln\left(3.221+\sqrt{(3.221)^2-1}\right)}$$

$$= \frac{3.7166}{1.8378} = 2.0223$$

$N \simeq 3$

$$a = \frac{1}{2}\left[\frac{1+\sqrt{1+\epsilon^2}}{\epsilon}\right]^{1/N} - \frac{1}{2}\left[\frac{1+\sqrt{1+\epsilon^2}}{\epsilon}\right]^{-1/N}$$

$$= \frac{1}{2}\left[\frac{1+\sqrt{1+(0.48)^2}}{0.48}\right]^{1/3} - \frac{1}{2}\left[\frac{1+\sqrt{1+(0.48)^2}}{0.48}\right]^{-1/3}$$

$$a = 0.8189 - 0.3052 = 0.5137$$

$$b = \frac{1}{2}\left[\frac{1+\sqrt{1+\epsilon^2}}{\epsilon}\right]^{1/N} + \frac{1}{2}\left[\frac{1+\sqrt{1+\epsilon^2}}{\epsilon}\right]^{-1/N}$$

Scanned by CamScanner

$$= \frac{1}{2}\left[\frac{1+\sqrt{1+(0.48)^2}}{0.48}\right]^{1/3} + \frac{1}{2}\left[\frac{1+\sqrt{(0.48)^2+1}}{0.48}\right]^{-1/3}$$

$$b = 0.8189 + 0.3052 = 1.124$$

$$S_k = \sigma_k + j\Omega_k$$

$$\sigma_k = -a\sin\left[(2k-1)\frac{\pi}{2N}\right]$$

$$\Omega_k = b\cos\left[(2k-1)\frac{\pi}{2N}\right]$$

K	σ_k	Ω_k	S_k
1	-0.2568	0.973	$-0.2568+j0.9763$
2	-0.5137	0	-0.5137
3	-0.2568	-0.973	$-0.2568-j0.973$

$$H_3(s) = \frac{K_N}{(s+0.2568-j0.9763)(s+0.5137)(s+0.2568+j0.973)}$$

$$= \frac{K_N}{s^3+0.9s^2+1.25+0.5}$$

$K_N = b_0$ [$\because N=3$ is odd]

Scanned by CamScanner

$$K_N = 0.5$$

$$H_3(s) = \frac{0.5}{s^3 + 0.9s^2 + 1.2s + 0.5}$$

$$H_a(s) = H_3(s)\Big|_{s \to \frac{\Omega_c}{s}}$$

$$\Omega_c = \frac{\Omega_p}{\left(10^{-K_p/10} - 1\right)^{1/2N}} = \frac{1.019}{\left(10^{0.915/10} - 1\right)^{1/6}}$$

$$\Omega_c = \frac{1.019}{\left(10^{0.0915} - 1\right)^{1/6}} = \frac{1.019}{0.7852} = 1.297 \text{ rad/sec}$$

$$H_a(s) = \frac{0.5}{\left(\frac{1.297}{s}\right)^3 + 0.9\left(\frac{1.297}{s}\right)^2 + 1.2\left(\frac{1.297}{s}\right) + 0.5}$$

$$H(z) = H_a(s)\Big|_{s \to \frac{2}{T}\left(\frac{z-1}{z+1}\right)}$$

$$T = 1$$

$$H(z) = \frac{0.5}{\left(\frac{1.297}{2\left(\frac{z-1}{z+1}\right)}\right)^3 + 0.9\left(\frac{1.297}{2\left(\frac{z-1}{z+1}\right)}\right)^2 + 1.2\left(\frac{1.297}{2\left(\frac{z-1}{z+1}\right)}\right) + 0.5}$$

Scanned by CamScanner