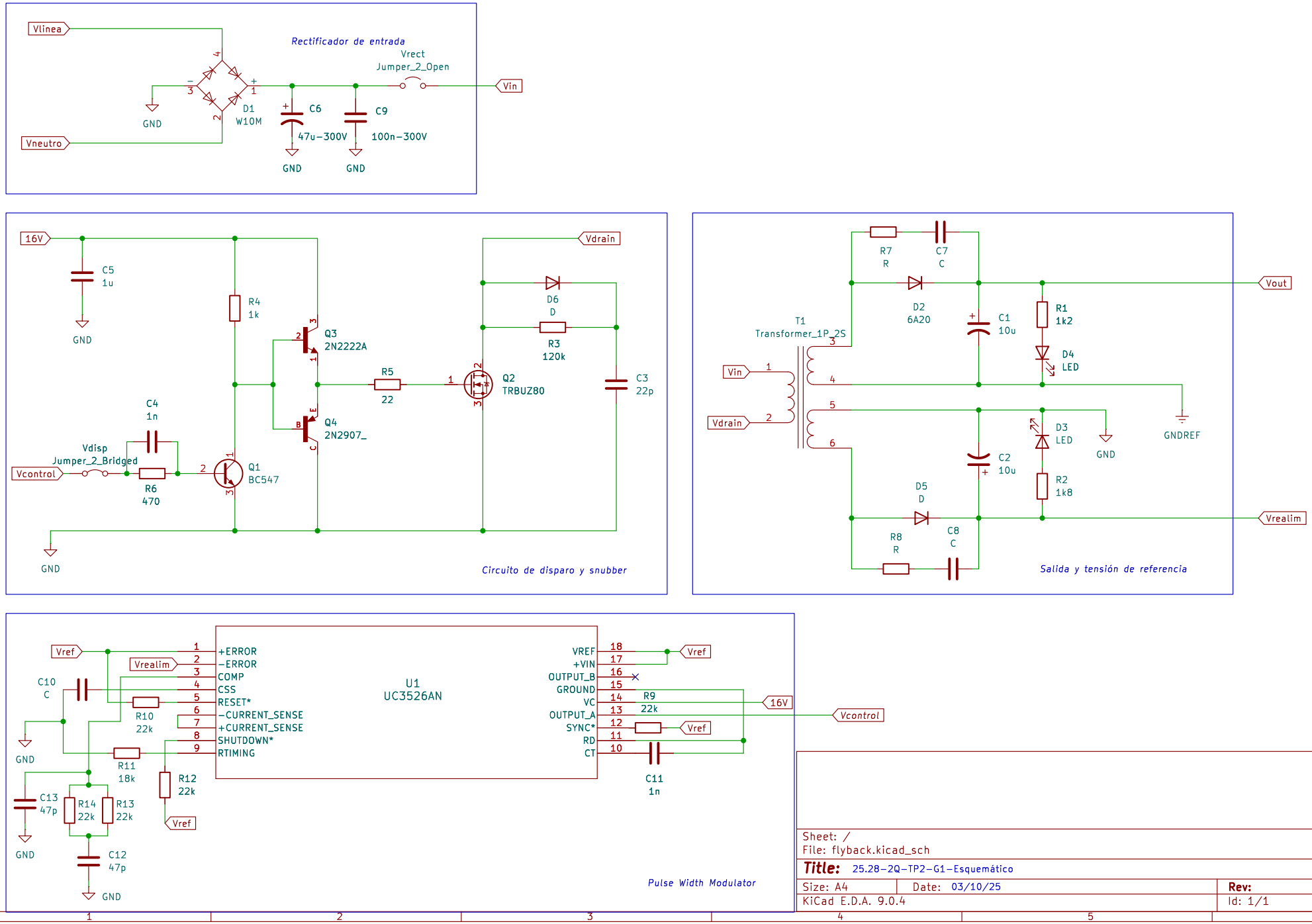

Sheet: /
File: flyback.kicad_sch

Title: 25.28-2Q-TP2-G1-Esquemático

Size: A4	Date: 03/10/25	Rev:
KiCad E.D.A. 9.0.4		Id: 1/1