Original Article

Institution of MECHANICAL ENGINEERS

Journal of AUTOMOBILE ENGINEERING

Proc IMechE Part D:
J Automobile Engineering
2014, Vol. 228(10) 1200–1216
© IMechE 2014
Reprints and permissions:
sagepub.co.uk/journalsPermissions.nav
DOI: 10.1177/0954407013516102
pid.sagepub.com
SAGE

Robust lap-time simulation

Julian Timings and David Cole

Abstract

Lap-time simulation is an important computational tool for many motor racing teams, but the assumption of ideal operating conditions and a 'perfect' racing driver is usually made. The aim of this paper is to extend lap-time simulation to include robustness to disturbances on the vehicle and robustness to mistakes by the driver. A previously developed receding-horizon model predictive control with a convex optimisation method for lap-time simulation is extended with a tube-based technique for robust model predictive control. A linear quadratic regulator compensatory controller maintains the vehicle close to the nominal vehicle path and speed trajectories in the presence of disturbances to the vehicle. An ensemble of disturbed trajectories defines a tube of trajectories, which is then used to modify the nominal vehicle path so that the track boundary constraints are satisfied in the presence of the disturbances. The lap time versus r.m.s. steering velocity curves for two different vehicle models demonstrate the expected trade-off: a decrease in the activity of the compensatory steering control increases the tube width, which leads to a longer lap time. The technique has application to designing and setting up cars to perform well in the presence of disturbances.

Keywords

Robust, lap time, simulation, convex, optimisation, model predictive control, racing

Date received: 24 March 2013; accepted: 13 November 2013

Introduction

Lap-time simulation is an important computational tool for many motor racing teams. A suitable tool allows many variations in the vehicle design and set-up to be explored quickly and at low cost, reducing the time required in the driving simulator or on the track. Several approaches to the computation exist, ranging from quasi-static methods[1] to non-linear optimisation techniques.[2]

Traditional lap-time simulation assumes the 'perfect' racing driver: a driver that has perfect knowledge of the vehicle dynamics and the track layout, and a driver that does not make mistakes. In reality, the vehicle is subjected to random disturbances, and the driver will be less than perfect, through sensorimotor noise and cognitive limitations. Thus the optimum vehicle path and the minimum lap time calculated by traditional simulation tools may not be realised in practice. A related shortcoming of traditional lap-time simulation is that the 'driveabililty' of the vehicle is not taken into account. The vehicle parameter values that deliver a fast lap time may result in a vehicle that is very sensitive to disturbances and thus difficult to drive. Some criteria in addition to the lap time are therefore needed to assess the vehicle and its performance when driven in the presence of disturbances and within the limitations of a human driver.

The aim of this paper is to extend lap-time simulation to include robustness to disturbances. The starting point is a lap-time simulation algorithm recently developed by the present authors.[3] The algorithm uses receding-horizon model predictive control (MPC) and formulates the minimisation problem as a convex function. This approach calculates the optimum path and speed of the vehicle and the corresponding control actions, takes account of the dynamic behaviour of the vehicle, is not too computationally demanding and reliably produces a solution without requiring special attention to initial conditions.

The second section provides a brief overview of the robust predictive control strategies and addresses their suitability in the context of robust lap-time simulation. Tube-based MPC is identified as a suitable approach, and its application is outlined in the third section. The

University of Cambridge, Cambridge, UK

Corresponding author:
David Cole, Department of Engineering, University of Cambridge, Trumpington Street, Cambridge CB2 1PZ, UK.
Email: djc13@cam.ac.uk

fourth section describes the vehicle model and the results of the existing lap-time minimisation calculation. A model of a driver's closed-loop control of disturbances is presented in the fifth section, and the generation of simulated random disturbances is described in the sixth section. The results of the robust lap-time simulation are presented and discussed in the seventh section. The conclusions are stated in the final section of the paper.

Review of robust predictive control

In general, robust control is concerned with the control of systems that are uncertain in some form. Uncertainty is generally grouped into three different types, which potentially could all be present in a single system.

1. The system may have random external disturbances which affect the evolution of the states.
2. There might be uncertainty in the feedback information.
3. The parameters of the system being controlled may be uncertain.

Broadly speaking, the robust control literature that is concerned with optimal control of constrained systems having external disturbances or uncertain feedback falls into two categories of approach: open-loop minimum–maximum MPC in which a single sequence of control actions is used to minimise the worst-case cost, or feedback minimum–maximum MPC where the worst-case cost is minimised over a sequence of control laws. As highlighted by numerous researchers,[4,5] the open-loop approaches suffer from being overly conservative as well as having infeasibility issues. Feedback MPC approaches address these issues at the expense of computational demand. The feedback methods that have made advancements in terms of a reduced computational burden, such as those by Goulart et al.,[6] are generally still restricted to a certain class of simplified systems. Despite being made over a decade ago, the concluding remarks by Mayne et al.[7] appear still to ring true: 'feedback model predictive controllers must still be regarded as conceptual rather than practical'.

In order to proceed, Rawlings and Mayne[8] proposed that optimality must be sacrificed for simplicity. A promising method in this regard appears to be tube-based predictive control.[9–11] The approach achieves online optimisation of robust MPC with a level of computational complexity of the same order as that of nominal MPC. The method replaces the ideal control policy with a policy that consists of an open-loop control sequence and a simple local feedback controller. The tube contains an ensemble of trajectories, each trajectory corresponding to a particular realisation of the uncertainty. The centre of the tube is determined using conventional MPC with tightened constraints on the deterministic system, and the size of the tube is restricted using local feedback to steer the uncertain trajectories towards the central path. In light of the relatively low computational requirement necessary to implement tube-based model predictive control, this method was selected for applying robust control techniques to lap-time simulation.

Application of tube-based MPC to the driving task

It is possible to think about the objective of generating optimum controls for the minimum lap time as consisting of two tasks. The primary task is determination of a trajectory that corresponds to the optimum for the deterministic system. Conceptually, the driver may build up knowledge of these controls from experience after completing numerous laps of a circuit; then it is a case of recalling these 'open-loop' controls from memory when required. The secondary task would then be the closed-loop control required to counteract uncertainty in order to realise the predetermined trajectory as closely as possible. This structure fits particularly well with the ideas and method associated with tube-based predictive control, namely that the controls generated by the perfect driver model are equivalent to nominal trajectory generation and that the closed-loop control corresponds to a disturbance-rejecting ancillary controller.

The proposed robust driver model therefore takes the structure illustrated in Figure 1. The illustration shows that, for a given disturbance realisation $\boldsymbol{w}$, compensatory control $\Delta\boldsymbol{u}_{dev}$ is determined by the ancillary closed-loop controller and applied to a time-varying small perturbation vehicle model (state matrix $\mathbf{A}$ and input matrix $\mathbf{B}$) generated about the nominal state trajectory $\boldsymbol{x}$. This generates the deviation $\boldsymbol{x}_{dev}$ of the states about the nominal state trajectory, giving a particular disturbed vehicle response $\tilde{\boldsymbol{x}}$. Repeating the closed-loop control for each disturbance realisation generates a bundle of state deviation trajectories which, once combined with the nominal state trajectory, yields a tube of state trajectories encapsulating the response to every disturbance realisation. Translating this state trajectory tube into an equivalent tube of vehicle coordinate positions, provided that the number of disturbance realisations is sufficiently high, allows an 'outer-bounding' tube to be identified corresponding to the maximum probable spread of vehicle paths (Figure 2(b)).

These initial response tubes would clearly violate the track boundary constraints imposed on the system, because the initial nominal trajectory (Figure 2(a)) leaves no margin for error with regard to the boundaries. It is therefore necessary to iterate this process by contracting the boundary constraints on the nominal system, according to the extent to which the original constraints were violated, which in the first instance is simply the 'width' of the tube (Figure 2(c)). Repeating the nominal trajectory calculation and determining the

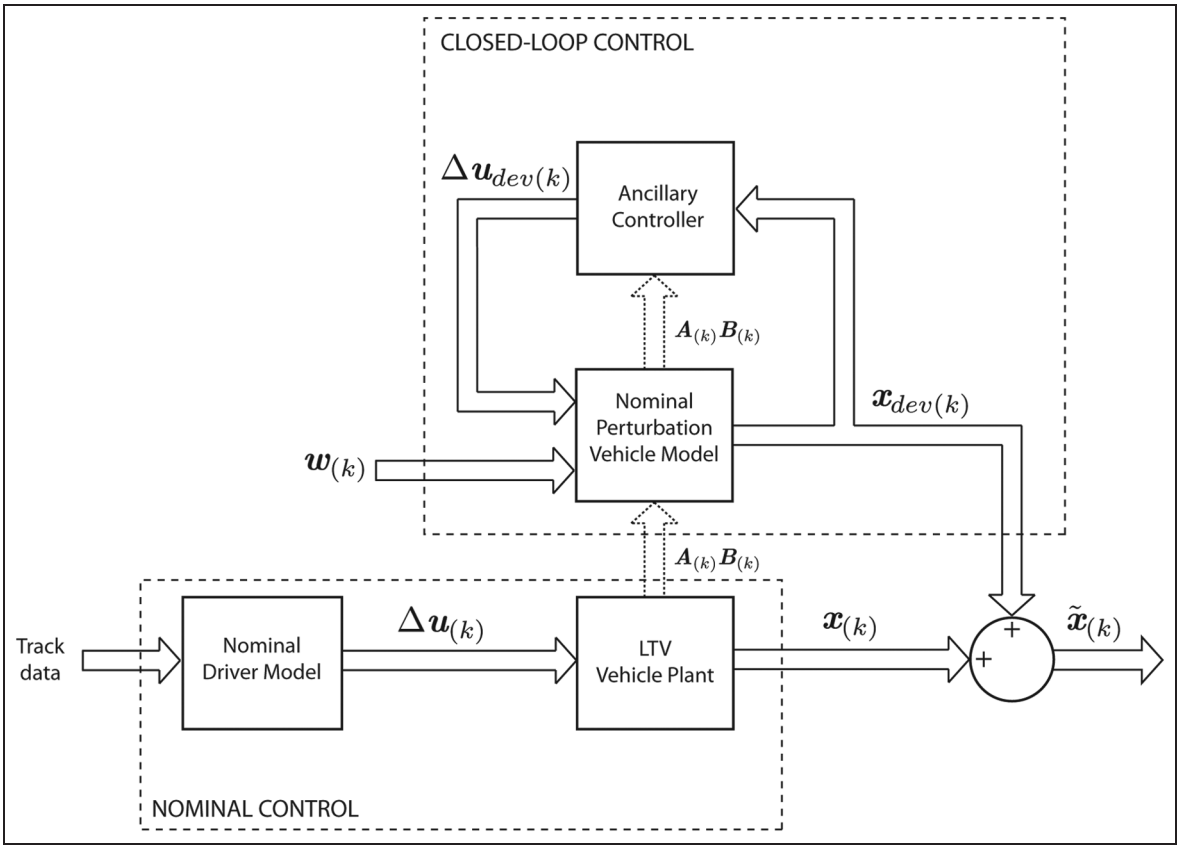

Figure 1. Proposed structure of the robust driver model; the nominal deterministic driver model providing the 'open-loop' controls $\Delta \boldsymbol{u}$ is supplemented with an ancillary controller providing disturbance rejection through compensatory closed-loop control. k is the discrete time step index.
LTV: linear time-varying.

new corresponding vehicle position tubes should mean that the constraints are not violated, therefore ensuring robustness of the system (Figure 2(d)). However, since the nominal trajectory changes between the first iteration and the second iteration, it is probable that the tube section changes too, and thus the assumption that robustness is guaranteed after just the first iteration may not hold. In this case the process of constraint tightening and re-running the nominal lap simulation may need to be continued until the robust nominal trajectories converge.

The width of the tube will be a function of the additive disturbance, the effort that the driver puts into the control, the vehicle characteristics and the vehicle's operating point. The interaction of these factors will be discussed later, in the seventh section, but it can be postulated at this stage that some indication of the 'driveability' of the car might be revealed, as shown conceptually in Figure 3. The graph illustrates that, if the driver applies an infinite amount of control effort, vehicle A provides the minimum nominal lap time whereas, if it is assumed the driver can only apply a finite amount of effort, vehicle B permits a faster lap time to be achieved. In this case it could be argued that vehicle B is more driveable, despite the fact that vehicle A is theoretically faster.

Calculation of nominal controls and trajectories

Vehicle model

The vehicle model and lap-time minimisation calculation have been described in detail previously by the present authors;[3] an outline description is provided in this section. The lateral-yaw dynamics are described by the single-track model in Figure 4, and the longitudinal dynamics are described by the simple trolley model in Figure 5. The equations of motion are given as

$$M_t\left(\dot{v} + u\dot{\psi}\right) = F_{yf}\cos\delta + F_{xf}\sin\delta + F_{yr} \quad (1)$$

$$I_z\ddot{\psi} = a\left(F_{yf}\cos\delta + F_{xf}\sin\delta\right) - bF_{yr} \quad (2)$$

$$M_t\left(\dot{u} - v\dot{\psi}\right) = F_{xf}\cos\delta - F_{yf}\sin\delta + F_{xr} - F_{ax} \quad (3)$$

$$I_f\ddot{\theta}_f = T_f - F_{xf}r_f \quad (4)$$

$$I_r\ddot{\theta}_r = T_r - F_{xr}r_r \quad (5)$$

Brake and accelerator controls are combined into one wheel torque control input. During acceleration, all torque is applied to the rear axle. During braking, the torque is divided between the front wheels and rear wheels according to a fixed ratio b_f, which specifies the fraction of the total braking torque applied to the front wheels. To avoid discontinuity of control action between

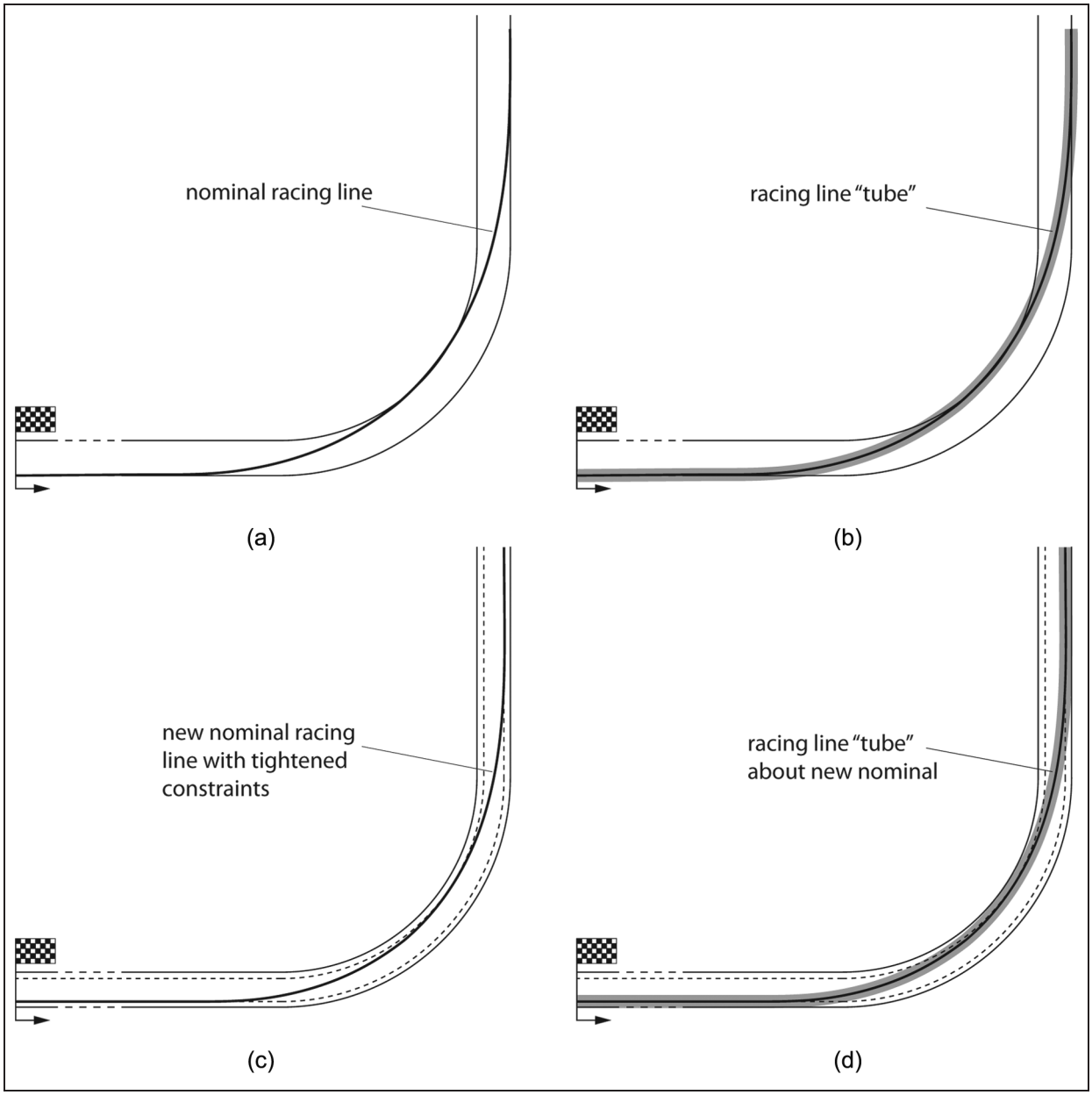

Figure 2. Process of iterating the nominal trajectory until the disturbance tube satisfies the track boundary constraints: (a) the initial nominal trajectory is generated using a perfect racing driver; (b) closed-loop driver control is introduced which targeted the nominal trajectory, thus minimising the effect of additive disturbances (using a large number of disturbance realisations allows the maximum tube width to be identified along the nominal trajectory); (c) the constraints are tightened according to the tube width, and a new nominal lap is calculated; (d) the tube of the disturbed trajectories is recalculated to ensure constraint satisfaction; otherwise constraints are tightened further and the process is repeated.

braking and accelerating, a tanh function is employed. As in our previous work,[3] the centre of mass of the vehicle is assumed to be at zero height above the road surface, and so there is no load transfer front to rear arising from the longitudinal acceleration, although a simple aerodynamic downforce (F_{az}) model results in some variation in the vertical tyre force with vehicle speed. The single-track geometry of the model also means that there is no load transfer side to side arising from the lateral acceleration. The generation of the lateral and longitudinal tyre forces is represented by a combined-slip 'magic formula' model that accounts for the influence of the variation in the vertical tyre force. Steering-angle commands δ_{com} from the driver pass through a second-order low-pass filter with a natural frequency ω_n and a damping ratio ζ_n to represent the bandwidth-limiting effect of the human neuromuscular system according to[12]

$$\ddot{\delta}_{sw} + 2\zeta_n\omega_n\dot{\delta}_{sw} + \omega_n^2\delta_{sw} = \omega_n^2\delta_{com} \tag{6}$$

The model parameters and their values are given in Table 1. The parameter values represent a small

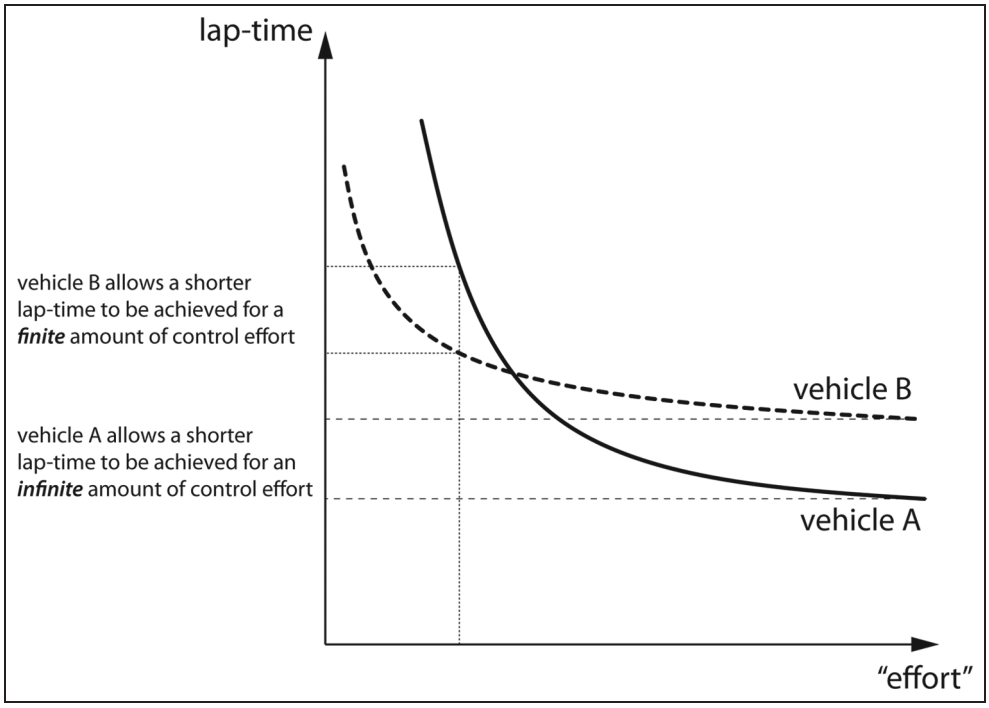

Figure 3. Lap time versus driver 'effort': an indication of driveability?

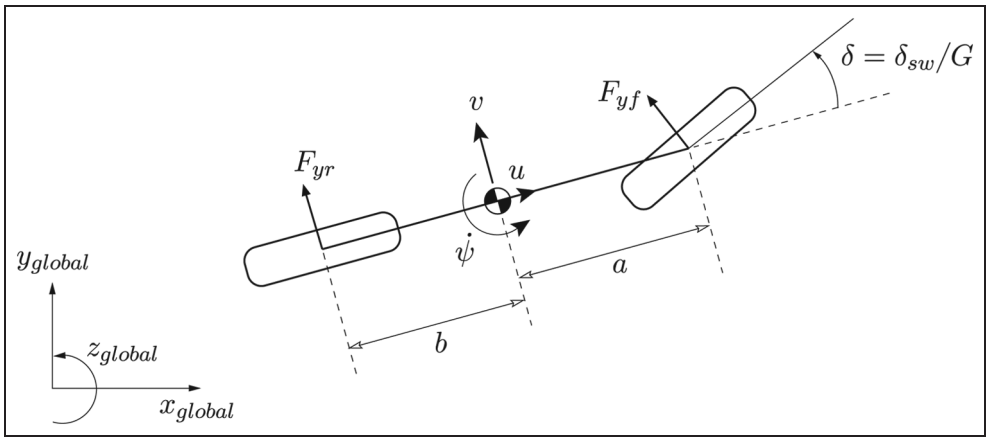

Figure 4. Single-track vehicle model with the associated forces and dimensions.

passenger car. Full details of the vehicle and tyre models have been given in our previous paper.[3]

Lap-time minimisation

Lap-time minimisation is performed using receding-horizon MPC with constraints and a convex optimisation algorithm. The parameter values associated with the algorithm are given in Table 2. Full details have been given in our previous paper,[3] and additional information and results can be found in other work by the present authors.[13,14] The algorithm calculates the steering control and the drive and brake control necessary to minimise the time required to travel around the circuit, constrained by the boundaries of the circuit. Constraints are also placed on the fraction of the maximum horizontal force capacity of the tyre that can be used (in this case 99.9%), and on the maximum drive torque that can be applied (1400 N m, to represent an engine limitation). The vehicle trajectories arising from applying the algorithm to the vehicle model and a simple racing circuit are shown in Figure 6. Trajectories are shown for understeering vehicle characteristics and oversteering vehicle characteristics. The understeering vehicle parameter values are as given in Table 1. The oversteering vehicle is identical except that the centre of mass is moved rearwards, so that $a = 1.38$ m and $b = 0.92$ m. Note that the change in the centre-of-mass position affects the tyre's force–slip behaviour by virtue of the tyre model's sensitivity to the vertical force. The steering-wheel angle, the drive and brake torque, the yaw rate and the speed as functions of the time are

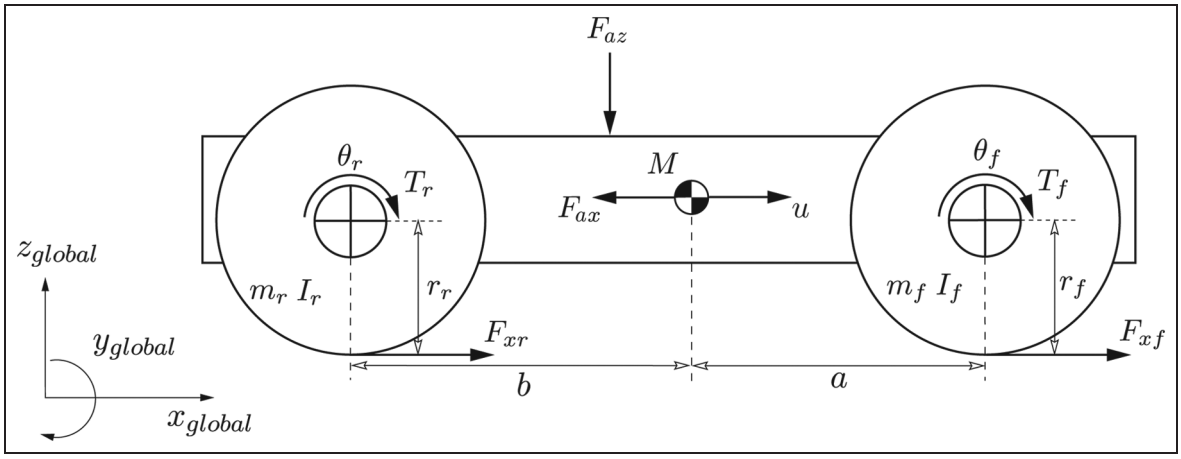

Figure 5. Simple trolley model with the associated driving and braking torques, the longitudinal tyre forces, the aerodynamic forces and the dimensions. The load transfer between the front axle and the rear axle due to braking or accelerating the car is neglected although the centre of gravity in this figure is depicted at a non-zero height.

Table 1. Model parameters and values of the vehicle.

Parameter	Symbol	Value
Mass of the total vehicle	M_t	1050 kg
Yaw inertia of the vehicle	I_z	1500 kg m^2
Distance from the centre of mass to the front axle	a	0.92 m
Distance from the centre of mass to the rear axle	b	1.38 m
Ratio of the steering-wheel angle to the road-wheel angle	G	17
Damping ratio of the neuromuscular system	ζ_n	0.707
Natural frequency of the neuromuscular system	ω_n	18.85 rad/s
Axle inertia of the wheel	I_j	2 kg m^2
Radius of the wheel	r_j	0.28 m
Brake balance	b_f	0.6
Aerodynamic balance	a_f	0.38
Cross-sectional area	A_x	2 m^2
Lift coefficient	C_z	0.26
Drag coefficient	C_x	0.35
Density of air	ρ	1.225 kg/m^3
Tyre parameters	c_1, c_2	69 kN/rad, 1.4 kN
Pacejka magic formula coefficients (per axle)	B, C, D, E	1.03, 1.6, 1.355, 0

Table 2. Simulation and constraint parameter values used during minimum-manoeuvre-time simulations.

Parameter	Symbol	Value
Discrete time step	T	0.02 s
Preview horizon	N_p	300
Distance-travelled weight	q	10
$\Delta\delta_{combound}$ weight	R_1	1
ΔT_{bound} weight	R_2	10^{-6}
Width of the road	w_r	10 m
Maximum tyre force saturation	F_c^{limit}	99.9%
Upper bound on the drive torque	T_{ubound}	1400 N m
Bound on the change in the commanded steering-wheel angle between optimisations	$\Delta\delta_{combound}$	0.2 rad
Bound on the change in the drive and brake torque between optimisations	ΔT_{bound}	500 N m

shown in Figure 7. The lap time is 38.91 s for the understeering vehicle and 39.02 s for the oversteering vehicle.

Closed-loop controller

The purpose of the ancillary closed-loop controller is to maintain the state of the uncertain system close to that of the nominal trajectory. For a time-invariant linear system this is commonly achieved using a linear feedback gain determined offline, whereas typically a model predictive controller is used in the non-linear case. Since the nominal control in the present study is based around a time-varying linear system that approximates the non-linear vehicle, a control strategy is adopted in between the above methods in terms of complexity; i.e. the ancillary closed-loop controller uses gain-scheduled linear quadratic regulator (LQR) control to track the nominal trajectory. Ideally the ancillary closed-loop controller should also account for time delays of human cognitive and sensory processes; however, the time delay is not modelled explicitly in the present study.

Consider the deterministic time-varying linear system representing the vehicle plant, as outlined in the section on the vehicle model and described in detail in our previous paper,[3] which is given by

$$\boldsymbol{x}_{(k+1)} = \mathbf{A}_{(k)}\boldsymbol{x}_{(k)} + \mathbf{B}_{(k)}\,\Delta\boldsymbol{u}_{(k)} + \boldsymbol{F}_{(k)} \tag{7}$$

where k is the time step index, $\mathbf{A}$, $\mathbf{B}$ and $\mathbf{F}$ are the time-varying matrices describing the evolution of the states $\boldsymbol{x}$ in response to changes $\Delta\boldsymbol{u}$ in the control inputs,

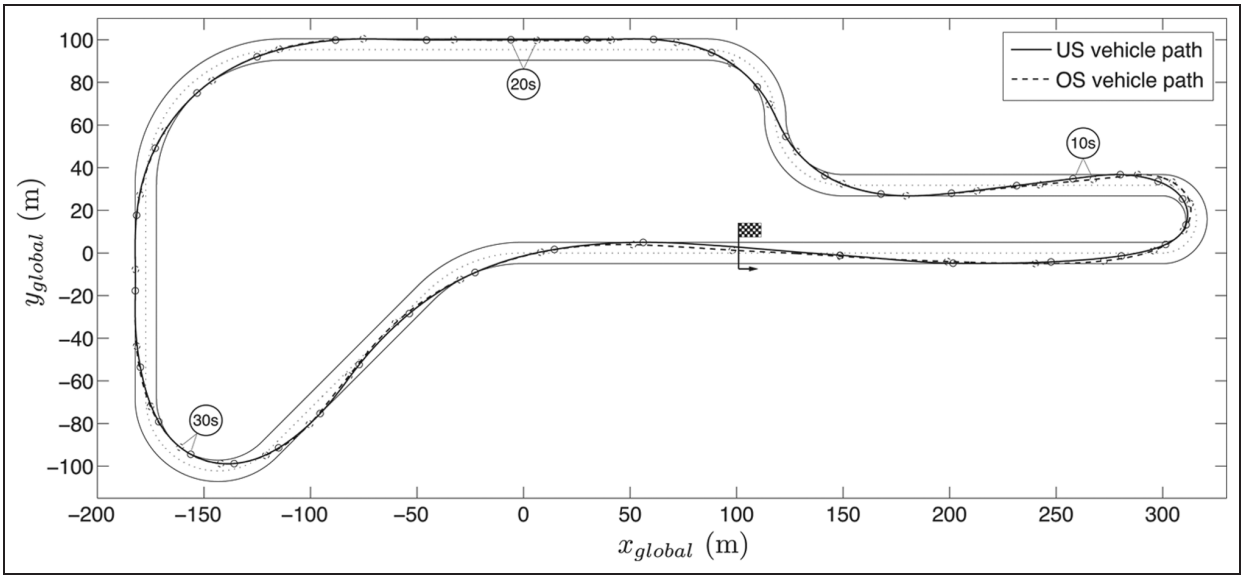

Figure 6. Minimum-manoeuvre-time simulation for an understeering-vehicle configuration and an oversteering-vehicle configuration over a complete lap, with marked 1 s intervals.
US: understeering; OS: oversteering.

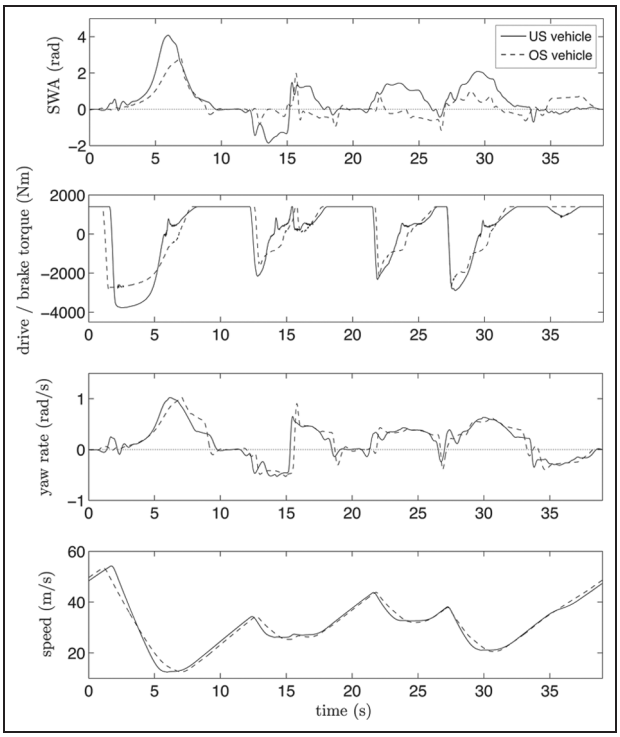

Figure 7. Histories of the steering-wheel angle, the drive and brake torque, the yaw rate and the speed as functions of the time during the lap.
SWA: steering-wheel angle; US: understeering; OS: oversteering.

$$\boldsymbol{x} = \left[v \;\; \dot{\psi} \;\; \psi \;\; u \;\; \dot{\theta}_f \;\; \dot{\theta}_r \;\; \dot{\delta}_{sw} \;\; \delta_{sw}\right]^{\mathrm{T}}$$

is the state vector and

$$\boldsymbol{u} = [\delta_{com} \quad T]^{\mathrm{T}}$$

is the control input vector. The corresponding uncertain system with additive disturbance $\boldsymbol{w}$ is

$$\tilde{\boldsymbol{x}}_{(k+1)} = \mathbf{A}_{(k)}\tilde{\boldsymbol{x}}_{(k)} + \mathbf{B}_{(k)}\,\Delta\tilde{\boldsymbol{u}}_{(k)} + \boldsymbol{F}_{(k)} + \boldsymbol{w}_{(k)} \tag{8}$$

Subtracting equation (7) from equation (8) gives the evolution of the state deviation, described by

$$\boldsymbol{x}_{dev(k+1)} = \mathbf{A}_{(k)}\boldsymbol{x}_{dev(k)} + \mathbf{B}_{(k)}\,\Delta\boldsymbol{u}_{dev(k)} + \boldsymbol{w}_{(k)} \tag{9}$$

where

$$\boldsymbol{x}_{dev(k)} = \tilde{\boldsymbol{x}}_{(k)} - \boldsymbol{x}^*_{(k)} \tag{10}$$

$$\Delta\boldsymbol{u}_{dev(k)} = \Delta\tilde{\boldsymbol{u}}_{(k)} - \Delta\boldsymbol{u}^*_{(k)} \tag{11}$$

and the asterisk superscript (*) indicates the nominal state trajectory and control input changes. Note that the state-space matrices for the uncertain system are the same as those for the deterministic system, since the disturbance is assumed to act about the nominal vehicle operating conditions. The associated tracking problem, where the states $\tilde{\boldsymbol{x}}_{(k)}$ and the input changes $\Delta\tilde{\boldsymbol{u}}_{(k)}$ of the disturbed system are required to track the optimal states $\boldsymbol{x}^*_{(k)}$ and the input changes $\Delta\boldsymbol{u}^*_{(k)}$ of the nominal trajectory calculation, can be formed using the quadratic performance index

$$\tilde{J}_{(k)} = \sum_{k=0}^{\infty} \boldsymbol{x}^{\mathrm{T}}_{dev(k)}\tilde{\mathbf{Q}}\boldsymbol{x}_{dev(k)} + \Delta\boldsymbol{u}^{\mathrm{T}}_{dev(k)}\,\tilde{\mathbf{R}}\,\Delta\boldsymbol{u}_{dev(k)} \tag{12}$$

where the matrices $\tilde{\mathbf{Q}}$ and $\tilde{\mathbf{R}}$ contain the weights of relative importance placed on tracking the state trajectories and the expenditure of control effort respectively. Since we consider the situation in which the driver has two independent control tasks (nominal open-loop control and ancillary closed-loop control), there is no reason why this cost function needs to be the same as that used during calculation of the nominal trajectory.

Provided that the pair $(\mathbf{A}_{(k)}, \mathbf{B}_{(k)})$ is stabilisable, from discrete LQR theory,[15] the time-invariant optimal control solution for a given operating condition is

$$\Delta \boldsymbol{u}^*_{dev(k)} = -\mathbf{K}_{(k)} \boldsymbol{x}_{dev(k)} \tag{13}$$

where

$$\mathbf{K}_{(k)} = \left(\tilde{\mathbf{R}} + \mathbf{B}^{\mathrm{T}}_{(k)} \mathbf{P}_{11(k)} \mathbf{B}_{(k)}\right)^{-1} \mathbf{B}^{\mathrm{T}}_{(k)} \mathbf{P}_{11(k)} \mathbf{A}_{(k)} \tag{14}$$

provided that $\mathbf{P}_{11(k)}$ satisfies the discrete-time Riccati equation

$$\mathbf{P}_{11(k)} = \mathbf{A}^{\mathrm{T}}_{(k)} \mathbf{P}_{11(k)} \mathbf{A}_{(k)} - \mathbf{A}^{\mathrm{T}}_{(k)} \mathbf{P}_{11(k)} \mathbf{B}_{(k)} \left(\tilde{\mathbf{R}} + \mathbf{B}^{\mathrm{T}}_{(k)} \mathbf{P}_{11(k)} \mathbf{B}_{(k)}\right)^{-1} \mathbf{B}^{\mathrm{T}}_{(k)} \mathbf{P}_{11(k)} \mathbf{A}_{(k)} + \tilde{\mathbf{Q}} \tag{15}$$

By calculating the optimal gain matrix $\mathbf{K}_{(k)}$ for each vehicle operating state throughout the nominal trajectory, the sequence of time-varying closed-loop controls serves to stabilise the system about each nominal state.

In order to minimise the effect of the disturbance on the vehicle path, it is proposed that the objective function (12) of the ancillary controller should be formulated to minimise the lateral displacement deviation y'_{dev} between the disturbed trajectory and the nominal trajectory. As demonstrated by Cole et al.,[16] introducing a second set of ground-fixed axes aligned with the nominal vehicle yaw direction in this case and assuming small yaw displacements between the nominal and disturbed trajectories allows two additional state derivatives to be added to the system through appropriate extension of $\mathbf{A}_{(k)}$ and $\mathbf{B}_{(k)}$, such that

$$\dot{x}'_{dev} = u_{dev} \tag{16}$$

$$\dot{y}'_{dev} = v_{dev} + u\psi_{dev} \tag{17}$$

Integration of equations (16) and (17) yields the longitudinal and lateral displacement deviations in the vehicle reference frame, which become system states. Note that the lateral deviation velocity (17) is a function of the nominal vehicle forward speed u; therefore, in order for this expression to include accurately the lateral displacement deviations, the disturbed vehicle speed should remain close to the nominal speed. Since concern here is primarily with identifying the lateral deviation of the tube about the nominal trajectory, this can be achieved by heavily penalising longitudinal deviations using equation (16), thus ensuring that equation (17) remains valid.

These states are only required to determine the closed-loop control gains, and therefore the system is only augmented with these states once the nominal controls and associated trajectories have been generated.

By choosing the state weighting matrix $\tilde{\mathbf{Q}}$ accordingly, the performance index (12) can reflect the objective of minimising these displacement deviations according to

$$\tilde{J}_{(k)} = \sum_{k=0}^{\infty} \tilde{q}_1 x^2_{dev(k)} + \tilde{q}_2 y^2_{dev(k)} + \Delta \boldsymbol{u}^{\mathrm{T}}_{dev(k)} \tilde{\mathbf{R}} \, \Delta \boldsymbol{u}_{dev(k)} \tag{18}$$

with the corresponding input weighting matrix $\tilde{\boldsymbol{R}} = \mathrm{diag}\left[\tilde{R}_1, \tilde{R}_2\right]$ on the closed-loop steering angle and the drive and brake torque usage. Minimisation of equation (18) for each nominal vehicle operating condition therefore leads to a sequence of optimal closed-loop control actions $\Delta \boldsymbol{u}_{dev(k)}$ which, when substituted into equation (9), allows the deviation of the states under closed-loop control to be determined. Upon rearranging equation (10), the addition of the state deviations to the nominal states yields the resultant disturbed state trajectories $\tilde{\boldsymbol{x}}_{(k)}$.

Additive disturbance

The additive disturbance considered in this study is that due to the random roughness of the road surface. The road roughness causes variation in the vertical dynamic tyre forces, which alters the braking and cornering forces generated by the tyres and thus the directional response of the vehicle.

Road surface topography description

The road roughness is typically assumed to have a Gaussian probability distribution, and the amplitude and wavelength properties of the surface profile to be characterised by the spectral density of the profile height. Analytical approximations have been devised by Dodds and Robson[17] and Robson,[18] which provide a description of the road profile spectra as a function of the wave number n using an equation of the form

$$S_{zr}(n) = S_0 |n|^{-w} \tag{19}$$

where $w = 2.5$ and the roughness S_0 typically takes a value between 3×10^{-8} m$^{0.5}$ cycle$^{1.5}$ and 3000×10^{-8} m$^{0.5}$ cycle$^{1.5}$ depending on the type of road. For time-domain vehicle vibration simulations it is necessary to have road profile height data as a function of equally spaced points along a road. Cebon[19] provided a method based on the reverse of conventional spectral analysis whereby a set of random phase angles θ_k, uniformly distributed between 0 and 2π, is applied to a series of coefficients S_k derived from the desired direct spectral density S_{zr}. The corresponding random profile heights z_{ri} at regular road distance intervals are determined by taking the inverse discrete Fourier transform of these spectral coefficients; hence

$$z_{ri} = \sum_{k=0}^{M-1} \sqrt{S_k}\, \mathrm{e}^{j(\theta_k + 2\pi k i/M)}, \quad i = 0, 1, 2, \ldots, M-1 \tag{20}$$

where $S_k = (2\pi/M\Delta) S_{zr} m$, $m = 2\pi k/M\Delta$ rad/m and Δ is the distance interval between surface profile points. Figure 8 shows a short road profile section generated using the above method with a target amplitude spectral density of $S_0 = 50 \times 10^{-8}$ m$^{0.5}$ cycle$^{1.5}$, corresponding to the upper limit of the motorway roughness according to Robson.[18] This value of roughness will be used throughout the remainder of the paper.

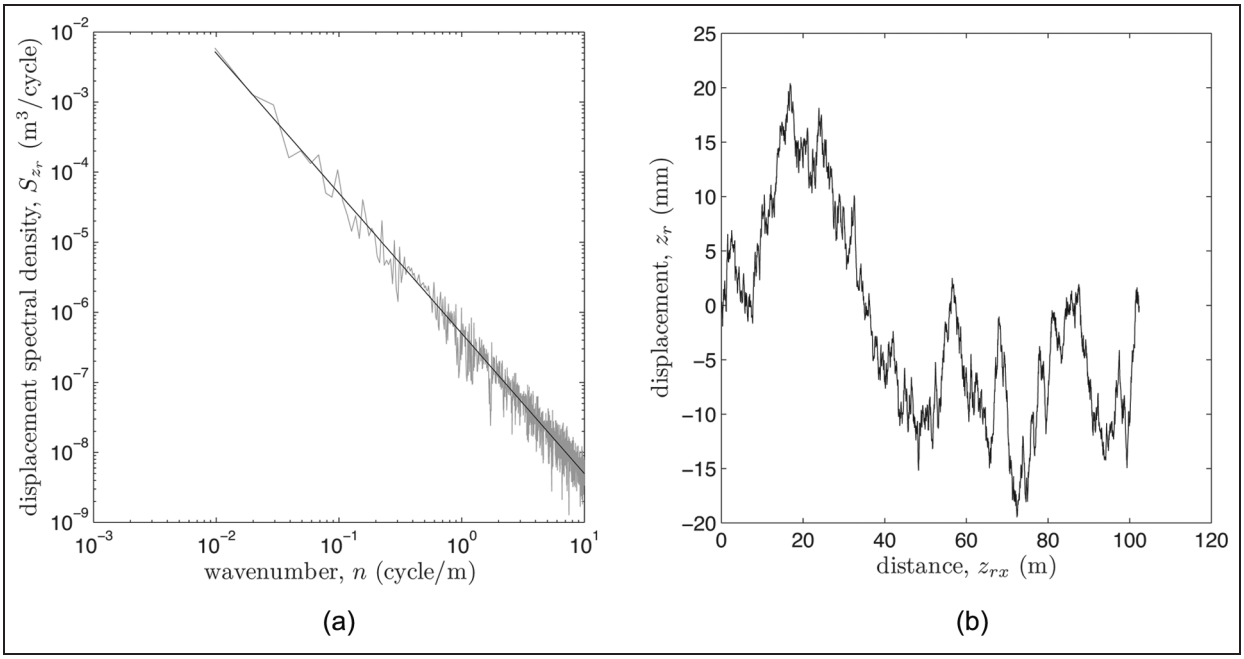

Figure 8. (a) Road roughness spectral density as a function of the wave number for an artificially generated road surface (grey curve) targeting a motorway roughness level (black line), as proposed by Robson;[18] (b) corresponding road profile height as a function of the distance along the road.

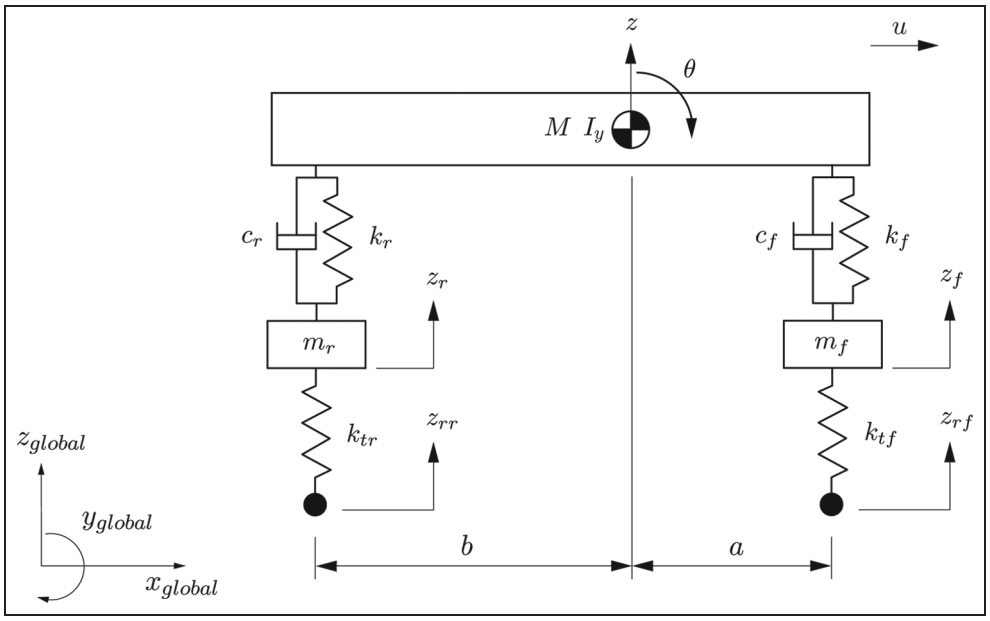

Figure 9. Four-degree-of-freedom pitch-plane vehicle model.

Vehicle vibration model

In order to simulate the dynamic tyre force response due to the vehicle running over a rough road, a four-degree-of-freedom pitch-plane model is introduced, as shown in Figure 9. As with the yaw-plane model outlined in the section on the vehicle model, the vehicle is assumed to be of a single-track type, and thus roll motion is not considered. From Figure 9 the equations of motion corresponding to vehicle body's bounce and pitch, and the vertical motion of the front and rear unsprung masses, can be defined as

$$M\ddot{z} = -(c_f + c_r)\dot{z} + (c_f a - c_r b)\dot{\theta} - (k_f + k_r)z + (k_f a - k_r b)\theta + c_f\dot{z}_f + c_r\dot{z}_r + k_f z_f + k_r z_r \quad (21)$$

$$I_y\ddot{\theta} = (c_f a - c_r b)\dot{z} - (c_f a^2 + c_r b^2)\dot{\theta} + (k_f a - k_r b)z - (k_f a^2 + k_r b^2)\theta - c_f a\dot{z}_f + c_r b\dot{z}_r - k_f a z_f + k_r b z_r \quad (22)$$

Table 3. Additional parameters, symbols and values for the pitch-plane model of the complete vehicle.

Parameter	Symbol	Value
Sprung mass of the vehicle	M	930 kg
Pitch inertia of the vehicle	I_y	1000 kg m^2
Unsprung mass of the front axle	m_f	60 kg
Unsprung mass of the rear axle	m_r	60 kg
Stiffness of the front suspension	k_f	46 kN/m
Stiffness of the rear suspension	k_r	54 kN/m
Damping of the front suspension	c_f	4600 N s/m
Damping of the rear suspension	c_r	5400 N s/m
Stiffness of the front tyre	k_{tf}	400 kN/m
Stiffness of the rear tyre	k_{tr}	400 kN/m

$$m_f\ddot{z}_f = c_f\dot{z} - c_f a\dot{\theta} + k_f z - k_f a\theta - c_f\dot{z}_f - (k_f + k_{rf})z_f + k_{tf}z_{rf} \tag{23}$$

$$m_r\ddot{z}_r = c_r\dot{z} + c_r b\dot{\theta} + k_r z + k_r b\theta - c_r\dot{z}_r - (k_r + k_{tr})z_r + k_{tr}z_{rr} \tag{24}$$

Casting these equations into a state-space system with the state vector $\boldsymbol{x}_p = \begin{bmatrix}\dot{z} & z & \dot{\theta} & \theta & \dot{z}_f & z_f & \dot{z}_r & z_r\end{bmatrix}^{\mathrm{T}}$ and the road input vector

$$\boldsymbol{u}_p = \begin{bmatrix}z_{rf} & z_{rr}\end{bmatrix}^{\mathrm{T}}$$

permits the dynamic tyre forces front and rear, denoted by subscript j, to be calculated in discrete time using

$$\Delta F_{zj(k)} = k_{tj}(z_{rj(k)} - z_{j(k)}) \tag{25}$$

The vehicle parameter values used during the vibration simulations are set out in Table 3.

Disturbance generation

Having set out a method for the generation of a realistic road profile, to be used as the input to the vehicle vibration model, it is now possible to run time-domain simulations of the vehicle over the road profile. Since the response of the vehicle is speed dependent, owing to so-called 'wheelbase filtering', a time delay is introduced between the front road input and the rear road input, based on the forward speed u of the vehicle from the nominal simulation. Running a large number of simulations of the vehicle over different random road profiles allows a series of vertical tyre force disturbance sequences to be built up using equation (25), such that

$$\Delta\mathcal{F}_{z(k)} = \left[\Delta\boldsymbol{F}^{(1)}_{z(k)}, \Delta\boldsymbol{F}^{(2)}_{z(k)}, \ldots, \Delta\boldsymbol{F}^{(N_r)}_{z(k)}\right] \tag{26}$$

where

$$\Delta\boldsymbol{F}_{z(k)} = \begin{bmatrix}\Delta F_{zf(k)} \\ \Delta F_{zr(k)}\end{bmatrix} \tag{27}$$

and N_r is the number of disturbance realisations (road profiles) used. These normal force variations, however, cannot be used directly as system disturbances in equations (8) and (9). It is necessary first to translate them into the equivalent state disturbance $\boldsymbol{w}$. This is achieved by assuming that ΔF_{zf} and ΔF_{zr} are in fact inputs into the vehicle model. The magic formula tyre model is already a function of the tyre normal force. By explicitly linearising about the tyre operating conditions (the side slip, the longitudinal slip and the normal force) the linearised expressions become functions of the nominal vertical loads and the two load disturbances. Thus, two additional columns are added to the matrix $\mathbf{B}_{(k)}$ during the linearisation process, one for each additional 'input', which when multiplied by $\Delta\boldsymbol{F}_{z(k)}$ yields the corresponding state disturbance

$$\boldsymbol{w}_{(k)} = \mathbf{B}_{(k)}(:, 3:4)\ \Delta\boldsymbol{F}_{z(k)} \tag{28}$$

Collecting these state disturbance sequences together for each realisation gives

$$\mathcal{W} = \left[\boldsymbol{w}^{(1)}, \boldsymbol{w}^{(2)}, \ldots, \boldsymbol{w}^{(N_r)}\right] \tag{29}$$

An argument against the approach taken here, in terms of using the road roughness as the disturbance, is that in a real racing environment the driver repeatedly runs over the same piece of track each lap and therefore the same road profile. The driver might therefore learn to anticipate the effect of the roughness and to account for it in the determination of the nominal trajectory and controls. However, it should be noted that in the present study the use of road roughness as a disturbance is simply a means for investigating a robust control strategy. There are, of course, a number of other disturbances, such as the variation in the tyre–road friction and the driver-generated errors, which in reality may have a more significant random lap-to-lap effect.

Robust driver model simulation

Steady-state cornering manoeuvre

As highlighted in the third section, the width of the vehicle trajectory 'tube' is a function of both the closed-loop control effort, associated with disturbance rejection, and the nominal vehicle–tyre operating conditions. Before proceeding, it is interesting to explore this relationship further and to gain a better understanding of the effectiveness of the closed-loop ancillary controller for a range of cost function weightings. This is achieved by running, offline, a number of simulations of the understeering vehicle driving in circles, over rough ground, at a constant speed. By varying the constant steering angle of each manoeuvre, different steady-state vehicle operating conditions can be achieved, with each corresponding to a particular level of tyre friction usage. Each steady-state condition then replicates to some extent that of the vehicle when operating at a steady speed in a corner during the nominal minimum lap-time simulation. For a given amount of closed-loop steering effort, determined by the LQR controller weights, the state and the subsequent lateral tyre force variation for a large number of disturbance

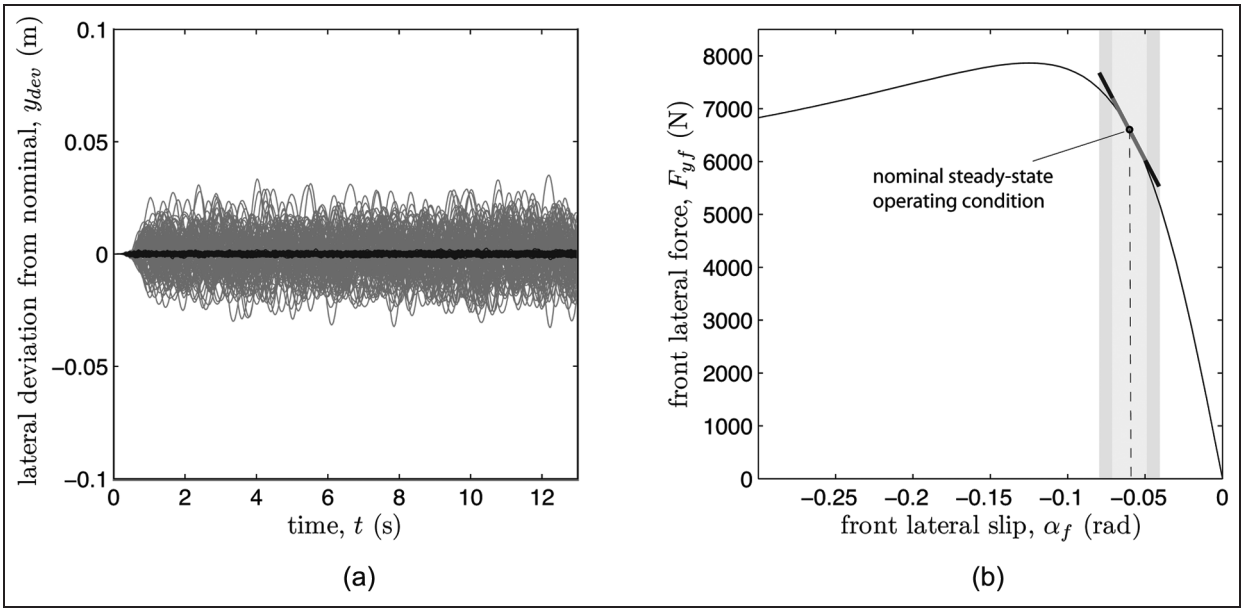

Figure 10. Simulation results of the understeering vehicle driving in a constant-radius circle over rough ground corresponding to a nominal front lateral slip of –0.06 rad: (a) tighter closed-loop position control (black curves) is achieved using the ancillary controller weights $\tilde{q}_1 = 5 \times 10^6$, $\tilde{q}_2 = 10^6$ and $\tilde{R}_1 = \tilde{R}_2 = 1$, compared with looser control (grey curves) with the weights $\tilde{q}_1 = 0.5$, $\tilde{q}_2 = 0.1$ and $\tilde{R}_1 = \tilde{R}_2 = 1$; (b) tighter control results in more steering effort and thus more slip variation about the nominal operating condition.

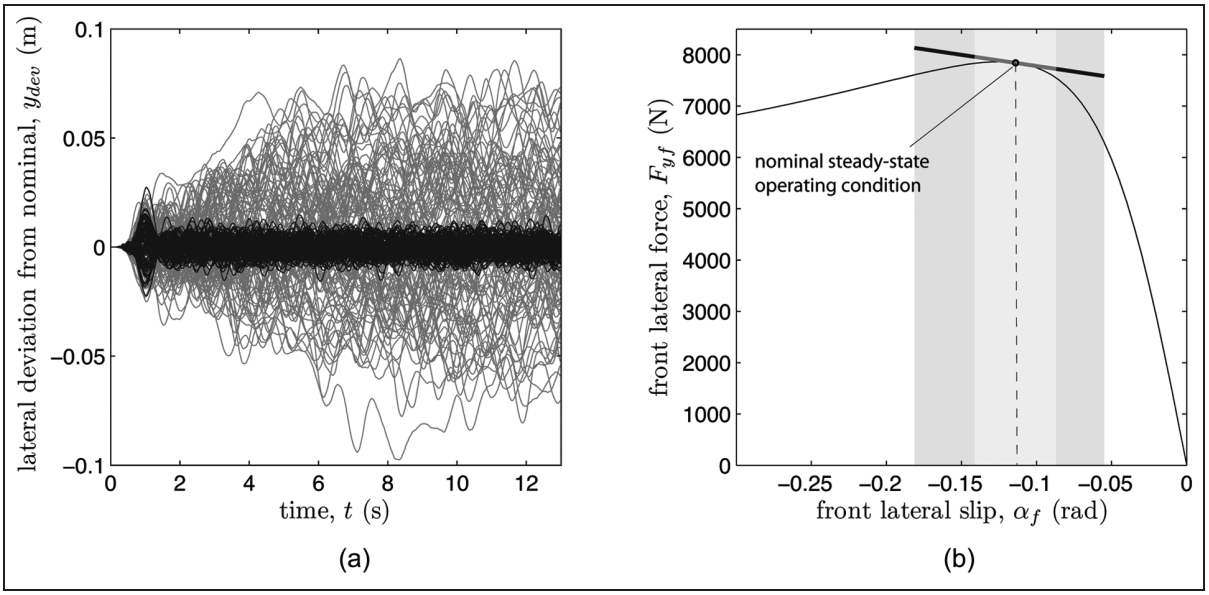

Figure 11. Simulation results of the understeering vehicle driving in a constant-radius circle over rough ground corresponding to a nominal front lateral slip of –0.11 rad, where tighter position control (black curves) and looser position control (grey curves) are achieved using the same ancillary controller weights as those in Figure 10: (a) with the nominal operating condition close to saturation, increased position deviations are observed; (b) the increased position deviations stem from the reduced linearised cornering stiffness of the tyre, leading to larger steering activity and thus more slip variation about the nominal operating condition.

realisations can then be assessed at each operating condition. Figures 10 and 11 demonstrate two such operating conditions, at side-slips of the front tyre of approximately –0.06 rad and –0.11 rad respectively, and the subsequent linearised disturbance response predicted by the robust driver model using two different control weightings. The figures illustrate the effect of tighter closed-loop control, in terms of the lateral position deviation, leading to larger slip fluctuations due to increased steering activity. The figures also illustrate reduced nominal slip operation, resulting in more controllability and therefore less state deviation for the same levels of control effort. However, Figure 11(b) in particular highlights a potential limitation of the method, in that, when nominal operation is set close to saturation, the linearised response of the vehicle somewhat misrepresents the true non-linear characteristics.

90° bend

The constant-turn-radius simulations in the previous section demonstrate the interaction between the vehicle operating conditions and the driver's control. With a better understanding of this relationship, attention turns to a cornering manoeuvre. Through simulation of a 90° bend using a tyre friction usage limit of 99.7%, each stage of the track boundary contraction process can be demonstrated, as previously illustrated schematically in Figure 2. The results were generated using the closed-loop controller weights $\tilde{q}_1 = 100\times10^{-3}$, $\tilde{q}_2 = 10^{-3}$ and $\tilde{R}_1 = \tilde{R}_2 = 1$. Figure 12(a) shows the nominal vehicle trajectory. 1000 disturbance realisations are then applied to the vehicle, subject to the driver's closed-loop control, and used to form an accurate estimate of the outer bounding vehicle trajectory tube (Figure 12(b)). The nominal calculation is then repeated with contracted track boundary constraints according to the time-varying width of the initial tube and a new nominal trajectory generated which maintains a gap to the boundaries in anticipation of random disturbances, as shown in Figure 12(c). Finally, Figure 12(d) shows that, by reapplying the 1000 disturbance realisations, it can be confirmed that the robust driver model is able to maintain the vehicle within the track boundaries in the presence of additive disturbances. The difference between the two nominal trajectory calculations was found to be sufficiently small that the tubes centred on each had very similar widths. Further iteration of the boundary contraction process was therefore not required. These results formalise the robust lap-time simulation procedure. Attention now turns to exploration of the trade-offs previously shown schematically in Figure 3.

Racing circuit

It is clear that the driver effort, the lap time and the nominal tyre friction usage are strongly coupled. The amount of closed-loop control effort used to track the nominal trajectory affects the width of the tube of the vehicle trajectory. The width of the tube and thus the required amount of boundary constraint contraction directly relate to the lap time. The lap time is heavily influenced by the nominal tyre friction usage, which in turn has an impact on the effectiveness of the driver's closed-loop control. To explore these relationships, a parameter sweep was undertaken using the robust lap-time simulation calculation described in the preceding sections. Simulating the short racing circuit introduced in the section on lap-time minimisation, the sweep consisted of varying the closed-loop controller weights (as a means of altering the closed-loop control effort) for an array of nominal tyre friction usage limits. The results for the understeering vehicle are shown in Figure 13, while Figure 14 presents the trade-off for the oversteering vehicle. The robust control parameters for the two configurations are set out in Table 4 and Table 5 respectively. From these tables it should be noted that in generating Figures 13 and 14 the different levels of control tightness were achieved by varying $\tilde{q}_1$ while keeping $\tilde{q}_1/\tilde{q}_2$ constant. The control weights $\tilde{R}_1$ and $\tilde{R}_2$ were set to unity throughout. As expected, the results demonstrate that the lap-time decreases with increasing tyre friction usage. However, when disturbances are present, a trade-off exists between the targeted nominal tyre usage and the robust lap times. The graphs reveal the minimum lap time for each weighting level and also show that the trade-off varies with the amount of control effort. The two vehicle set-ups demonstrate similar trade-offs, particularly when under tight closed-loop control (large position tracking weights), with minimum lap times arising from limit operation at approximately 99.7% nominal tyre friction usage, i.e. very close to saturation. Under looser control the oversteering vehicle is seen to benefit marginally from reduced nominal tyre usage.

Although all the minima were identified, the simulations generated some unrealistic behaviour for tight closed-loop control at the highest tyre usage settings. At the tightest setting, the robust lap simulation predicts a particularly sharp increase in the lap time beyond 99.8% tyre friction usage. The lack of controllability combined with the large position tracking weights results in overenthusiastic closed-loop control. This has an adverse effect on the tube width, leading to spikes at certain locations which are of the order of the track width, making it difficult for the second nominal calculation to be performed. In addition to this, control of the oversteering vehicle using the two tightest control settings led to unrealistic levels of control activity. These results were therefore excluded from the comparison.

With the aim of constructing the driveability curves presented schematically in Figure 3, the driver 'effort' is defined to be the r.m.s. steering-wheel velocity of the closed-loop controller, denoted as r.m.s. $\dot{\delta}_{sw-dev}$. Therefore, for a particular minimum on Figures 13 or 14, taking the mean r.m.s. $\dot{\delta}_{sw-dev}$ for all disturbance realisations and plotting this against the corresponding nominal lap time give a single point on the vehicle's driveability curve. Repeating this process for every minimum, and thus for a range of control tightnesses, allows the complete curve to be built up for the two vehicle configurations. Figure 15 shows the resultant curves for both the understeering vehicle and the oversteering vehicle, with the intermediate relationships regarding the tube width shown in Figure 16.

Figure 15 indicates that, in this case, the understeering vehicle results in both a faster vehicle and a vehicle that is arguably more driveable. By comparing corresponding points, generated using the same closed-loop control weights, it is evident that the understeering configuration generally requires less steering activity to counteract the disturbances (e.g. compare the two points identified by open stars). The intermediate plots (Figure 16) highlight the relatively linear relationship between the lap time and the tube width. The variation in the tube width with the closed-loop effort indicates

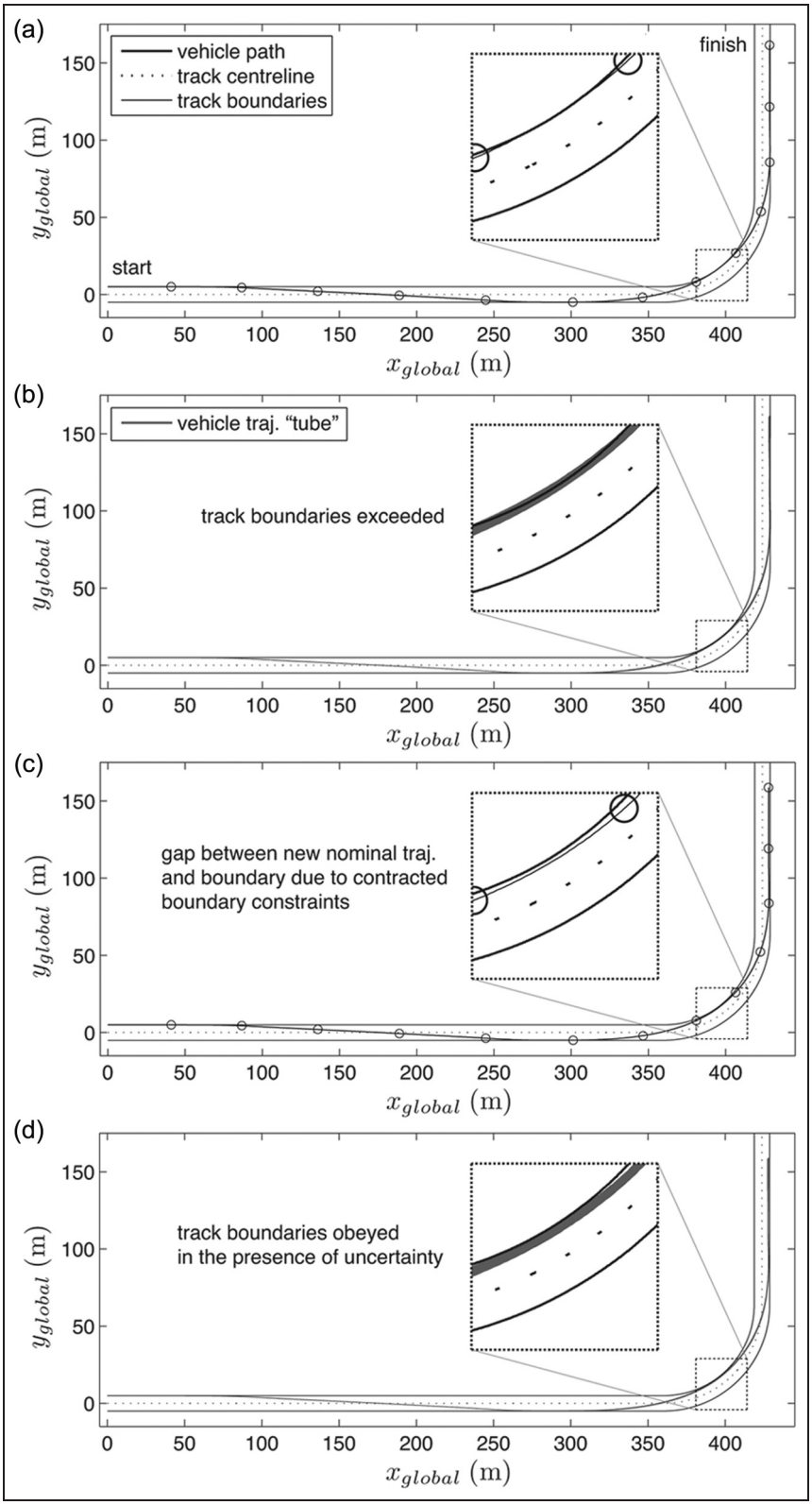

Figure 12. Simulation results demonstrating iteration of the nominal trajectory to ensure track boundary constraint satisfaction when uncertainty is present: (a) a nominal trajectory is generated using a perfect racing driver model with a tyre friction usage limit of 99.7%; (b) an ancillary gain-scheduled LQR controller targets the nominal trajectory during application of 1000 disturbance realisations to form the vehicle's path tube; (c) the constraints are tightened according to the tube width, and the new nominal lap simulation is recomputed while maintaining a tyre friction usage limit of 99.7%; (d) the tube of the disturbed trajectories is recalculated to ensure constraint satisfaction.

that, for a given amount of effort, the understeering vehicle has a narrower tube width. Furthermore, the plot suggests that the lack of controllability leads to a minimum-tube-width asymptote.

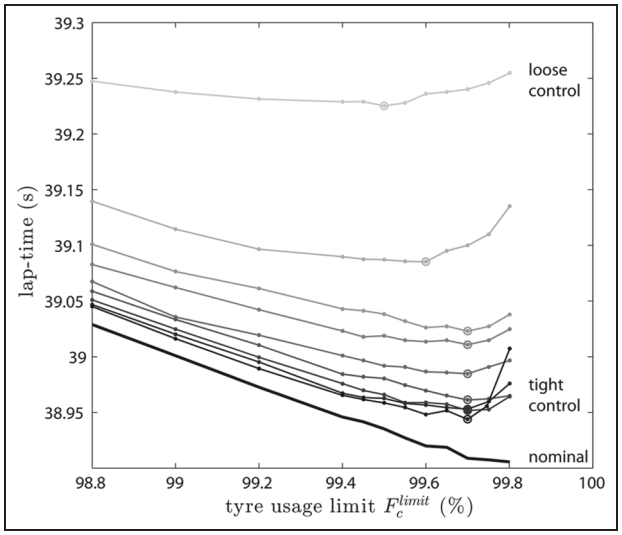

Figure 13. Robust lap-time simulation trade-off associated with the closed-loop control effort, the lap time and the nominal tyre force usage, for the understeering vehicle traversing the short racing circuit. This is generated using ancillary controller cost function weights ranging from $\tilde{q}_1$= 100 $\times$ 10^{-2} and $\tilde{q}_2$= 10^{-2} (loose control) to q_1 =100 $\times$ 10^6 and q_2=10^6 (tight control) with $\tilde{R}_1$ = $\tilde{R}_2$ = 1.

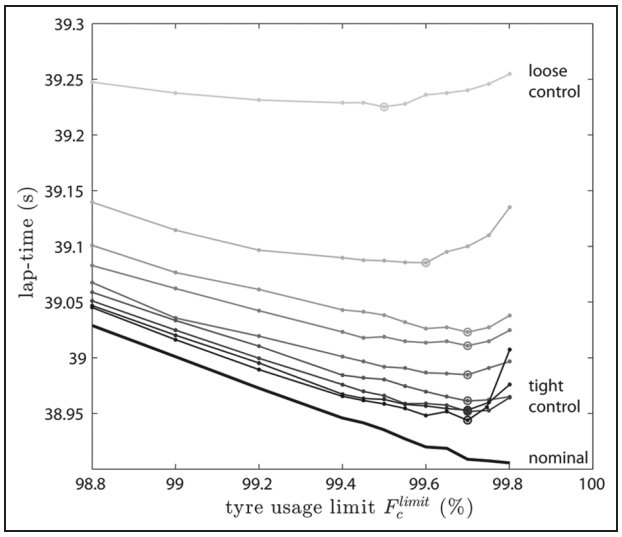

Figure 14. Robust lap-time simulation trade-off associated with the closed-loop control effort, the lap time and the nominal tyre force usage, for the oversteering vehicle traversing the short racing circuit. This is generated using ancillary controller cost function weights ranging from $\tilde{q}_1$= 100 $\times$ 10^{-2} and $\tilde{q}_2$= 10^{-2} (loose control) to q_1 =100 $\times$ 10^6 and q_2=10^6 (tight control) with $\tilde{R}_1$ = $\tilde{R}_2$ = 1.

The crossing of curves speculated in Figure 3 is not present in Figure 15, but it is possible that other vehicle and tyre parameter values could give such behaviour and thus provide insight into setting up a vehicle to suit a particular level of driver control effort. These aspects are the subject of further work.

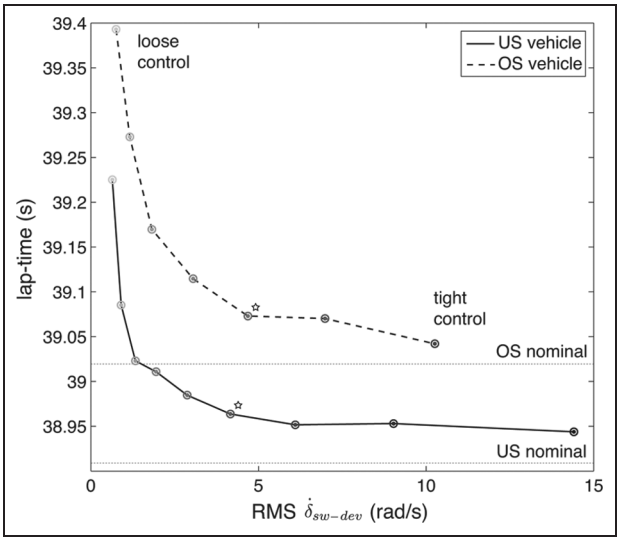

Figure 15. Lap time versus closed-loop control effort, measured as the r.m.s. steering-wheel velocity generated by the ancillary controller, for an understeering vehicle and an oversteering vehicle traversing the short racing circuit subject to road disturbances. The horizontal lines indicate the minimum lap times for the undisturbed (nominal) driver–vehicle system.
US: understeering; OS: oversteering; RMS: root mean square.

Table 4. Summary of the robust control parameters, the symbols and the values used during understeering vehicle robust lap simulations.

Parameter	Symbol	Value
Number of disturbance realisations	N_r	100
Ancillary control longitudinal deviation weight	$\tilde{q}_1$	1 to 10^8
Ancillary control lateral deviation weight	$\tilde{q}_2$	0.01 to 10^6
Ancillary control steering weight	$\tilde{R}_1$	1
Ancillary control throttle and brake weight	$\tilde{R}_2$	1

Table 5. Summary of the robust control parameters, the symbols and the values used during oversteering vehicle robust lap simulations.

Parameter	Symbol	Value
Number of disturbance realisations	N_r	100
Ancillary control longitudinal deviation weight	$\tilde{q}_1$	1 to 10^6
Ancillary control lateral deviation weight	$\tilde{q}_2$	0.01 to 10^4
Ancillary control steering weight	$\tilde{R}_1$	1
Ancillary control throttle and brake weight	$\tilde{R}_2$	1

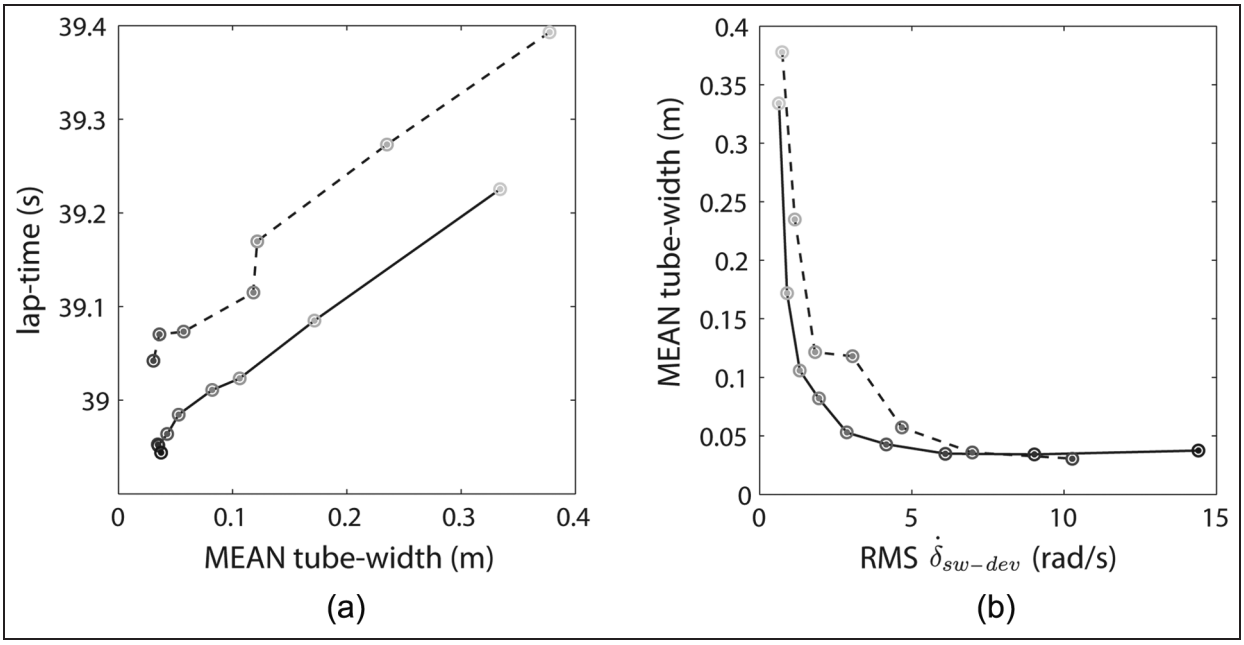

Figure 16. Intermediate relationships between the lap time and the closed-loop effort: (a) lap time versus mean width of the vehicle's path tube; (b) mean width of the vehicle path tube versus closed-loop steering activity. The solid curve represents the understeering vehicle, and the dashed curve represents the oversteering vehicle.
RMS: root mean square.

Conclusions

1. Techniques for robust predictive control were reviewed, and tube-based MPC was considered to be suitable for application to the lap-time simulation problem.
2. A previously developed receding-horizon MPC with convex optimisation was found to calculate reliably the minimum time and corresponding controls for a 90° bend and for a racing circuit.
3. Tube-based MPC was successfully implemented. A straightforward LQR compensatory controller maintained the vehicle close to the nominal vehicle path and speed trajectories. However, the assumption of a linear vehicle response about the nominal operating point may be unrealistic under some conditions (operation close to tyre saturation and large compensatory steering activity).
4. The ensemble of disturbed trajectories defined a tube, which was then used to modify the nominal vehicle path so that lane boundary constraints were satisfied in the presence of the disturbance. The tube size was little changed by the modified path, and therefore no further iterations of the path were needed.
5. Lap time versus r.m.s. steering velocity curves for an understeering vehicle and an oversteering vehicle demonstrated the expected trade-off, namely that a decrease in the activity of the compensatory steering control increases the tube width, which leads to a longer lap time. For the particular parameter values investigated, the understeering vehicle was always the faster of the two vehicles for any given r.m.s. steering velocity.
6. Further work is under way to investigate how the driver's compensatory steering action varies around the track, to examine the influence of the non-linear vehicle characteristics on the trade-off between the lap time and the compensatory steering activity, to explore other sources of disturbance, particularly from within the driver, and to improve the realism of the compensatory controller for steering and speed control.

Funding

This work was supported by the UK Engineering and Physical Sciences Research Council (EP/P504120/1) (studentship for Timings) and the Lotus F1 Team (RG57218).

Declaration of conflict of interest

The authors declare that there is no conflict of interest.

References

1. Brayshaw DL and Harrison MF. A quasi steady state approach to race car lap simulation in order to understand the effects of racing line and centre of gravity location. *Proc IMechE Part D: J Automobile Engineering* 2005; 219(6): 725–739.
2. Kelly DP and Sharp RS. Time-optimal control of the race car: a numerical method to emulate the ideal driver. *Veh System Dynamics* 2010; 48(12): 1461–1474.
3. Timings JP and Cole DJ. Minimum manoeuvre time calculation using convex optimisation. *Trans ASME, J Dynamic Systems, Measmt Control* 2013; 135: 031015-1–031015-9.

4. Scokaert POM and Mayne DQ. Min–max feedback model predictive control for constrained linear systems. *IEEE Trans Autom Control* 1998; 43: 1136–1142.
5. Kerrigan EC and Maciejowski JM. Feedback min–max model predictive control using a single linear program: robust stability and the explicit solution. *Int J Robust Nonlinear Control* 2004; 14: 395–413.
6. Goulart PJ, Kerrigan EC and Ralph D. Efficient robust optimization for robust control with constraints. *Math Programming* 2008; 114(1): 115–147.
7. Mayne D, Rawlings J, Rao C and Scokaert P. Constrained model predictive control: stability and optimality. *Automatica* 2000; 36: 789–814.
8. Rawlings JB and Mayne DQ. *Model predictive control: theory and design*. Madison, Wisconsin: Nob Hill Publishing, 2009.
9. Mayne D and Kerrigan E. Tube-based robust nonlinear model predictive control. In: *7th IFAC symposium on nonlinear control* systems, Pretoria, South Africa, 22–24 August 2007, pp. 36–41. Laxenburg: IFAC.
10. Mayne D, Seron M and Rakovi S. Robust model predictive control of constrained linear systems with bounded disturbances. *Automatica* 2005; 41: 219–224.
11. Langson W, Chryssochoos I, Rakovi S and Mayne D. Robust model predictive control using tubes. *Automatica* 2004; 40: 125–133.
12. Cole DJ. A path-following driver-vehicle model with neuromuscular dynamics, including measured and simulated responses to a step in steering angle overlay. *Veh System Dynamics* 2012; 50(4): 573–596.
13. Timings JP and Cole DJ. Vehicle trajectory linearisation to enable efficient optimisation of the constant speed racing line. *Veh System Dynamics* 2012; 50(6): 883–901.
14. Timings J and Cole DJ. Efficient minimum manoeuvre time optimisation of an oversteering vehicle at constant forward speed. In: *2011 American control conference*, San Francisco, California, USA, 29 June–1 July 2011, pp. 5267–5272. New York: IEEE.
15. Anderson B and Moore J. *Optimal control: linear quadratic methods*. Englewood Cliffs, New Jersey: Prentice-Hall, 1989.
16. Cole DJ, Pick AJ and Odhams A. Predictive and linear quadratic methods for potential application to modelling driver steering control. *Veh System Dynamics* 2006; 44: 259–284.
17. Dodds C and Robson J. The description of road surface roughness. *J Sound Vibr* 1973; 31(2): 175–183.
18. Robson JD. Road surface description and vehicle response. *Int J Veh Des* 1979; 1(1): 25–35.
19. Cebon D. *Handbook of vehicle–road interaction*. Lisse: Swets and Zeitlinger, 1999.

Appendix I

Notation

a	distance from the centre of gravity to the front axle
a_f	aerodynamic balance (fraction of the downforce on the front axle)
A_x	frontal cross-section area of the vehicle
$\mathbf{A}$	state-space state matrix
b	distance from the centre of gravity to the rear axle
b_f	brake balance (fraction of the braking torque on the front axle)
B, C, D, E	Pacejka magic formula coefficients
$\mathbf{B}$	state-space input matrix
c_f	damping of the front suspension
c_r	damping of the rear suspension
c_1, c_2	tyre parameters
C_x	aerodynamic drag coefficient
C_z	aerodynamic lift coefficient
F_{ax}	longitudinal aerodynamic drag force
F_{az}	aerodynamic downforce
F_c^{limit}	tyre force constraint saturation limit
F_x	longitudinal tyre force
F_y	lateral tyre force
F_z	vertical tyre force
$\mathbf{F}$	state-space constant matrix
G	ratio of the steering-wheel angle to the road-wheel angle
i	summation index
I_f	front-axle inertia about the spin axis
I_r	rear-axle inertia about the spin axis
I_y	pitch moment of inertia about the centre of gravity
I_z	yaw moment of inertia about the centre of gravity
J	cost function
k	discrete time step index
k_f	stiffness of the front suspension
k_r	stiffness of the rear suspension
k_t	vertical tyre stiffness
$\mathbf{K}$	gain vector
m	number of system inputs
m_f	unsprung mass of the front axle
m_r	unsprung mass of the rear axle
M	sprung mass of vehicle; number of terms in the summation
M_t	mass of the total vehicle
n	wave number of the road profile
N_p	number of preview horizon steps
N_r	number of disturbance realisations
$\mathbf{P}_{11}$	matrix in the discrete-time algebraic Riccati equation
q	distance-travelled cost function weight
$\tilde{q}_1$	ancillary controller longitudinal displacement deviation weight
$\tilde{q}_2$	ancillary controller lateral displacement deviation weight
$\tilde{\mathbf{Q}}$	ancillary controller cost function tracking weight matrix
r	radius of the tyre
R_1	change in the commanded steering-angle cost function weight
R_2	change in the wheel torque cost function weight
$\tilde{R}_1$	ancillary controller steering effort weight
$\tilde{R}_2$	ancillary controller throttle and brake effort weight
$\mathbf{R}$	cost function control effort weight matrix

$\tilde{\mathbf{R}}$	ancillary controller cost function control effort weight matrix
S_0	road roughness
S_k	spectrum coefficient of the road profile
S_{zr}	desired direct spectral density of the road profile
T	axle torque; discrete time interval
T_{ubound}	upper bound on the drive torque
u	forward velocity of the vehicle
$\boldsymbol{u}$	control (or input) vector
$\boldsymbol{u}_p$	input vector of the vibration model
v	lateral velocity of the vehicle
w	slope of the road displacement spectrum
w_r	width of the road
$\boldsymbol{w}$	additive disturbance vector
$\mathcal{W}$	additive disturbances for N_r realisations
x	longitudinal displacement in the global reference frame
$\boldsymbol{x}$	state vector
$\boldsymbol{x}_p$	state vector of the vibration model
y	lateral displacement in the global reference frame
z	vertical displacement of the sprung mass
z_f	vertical displacement of the front unsprung mass
z_r	vertical displacement of the rear unsprung mass
z_{rf}	vertical displacement of the front road input
z_{rr}	vertical displacement of the rear road input
δ	road-wheel steering angle
δ_{com}	commanded steering-wheel angle
δ_{sw}	steering-wheel angle
Δ	change in a variable in one discrete time step
$\Delta\delta_{combound}$	bound on the change in the commanded steering-wheel angle between optimisations
$\Delta\boldsymbol{F}_z$	change in the vertical load disturbance vector of the tyre
$\Delta\mathcal{F}_z$	change in the vertical disturbance matrix of the tyre for N_r realisations
$\Delta T_{combound}$	bound on the change in the drive and brake torque between optimisations
Δ	discrete distance between the road displacement values
ζ_n	damping ratio of the neuromuscular system
θ	pitch angle displacement of the sprung mass
θ_f	rotation angle of the front axle
θ_k	random phase angle
θ_r	rotation angle of the rear axle
ρ	density of air
ψ	yaw angle
$\dot{\psi}$	yaw rate
ω_n	natural frequency of the neuromuscular system

Superscripts

$\sim$	uncertain variable
$*$	nominal signal

Subscripts

com	commanded
dev	deviation of a disturbed variable from an undisturbed nominal variable
f	front
r	rear

Abbreviations

LQR	linear quadratic regulator
LTV	linear time-varying
MPC	model predictive control
OS	oversteering
SWA	steering-wheel angle
US	understeering