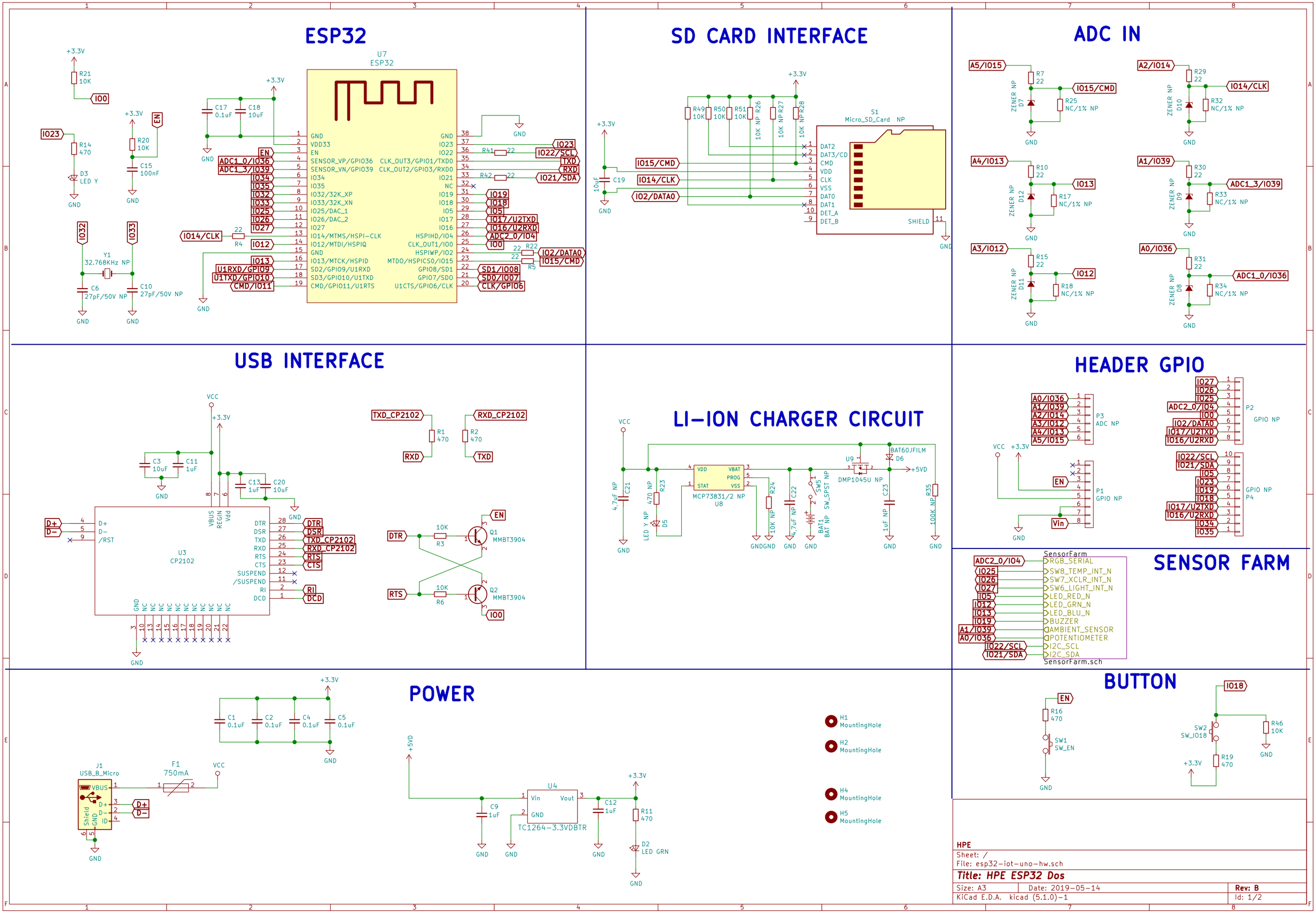
ESP32
U7
ESP32
SD CARD INTERFACE
S1
Micro_SD_Card NP
ADC IN
USB INTERFACE
U3
CP2102
LI-ION CHARGER CIRCUIT
U8
MCP73831/2 NP
U9
DMP1045U NP
HEADER GPIO
P1
GPIO NP
P2
GPIO NP
P3
ADC NP
P4
SENSOR FARM
SensorFarm
SensorFarm.sch
POWER
U4
TC1264-3.3VDBTR
J1
USB_B_Micro
BUTTON
HPE
Sheet: /
File: esp32-iot-uno-hw.sch
Title: HPE ESP32 Dos
Size: A3
Date: 2019-05-14
Rev: B
KiCad E.D.A. kicad (5.1.0)-1
Id: 1/2

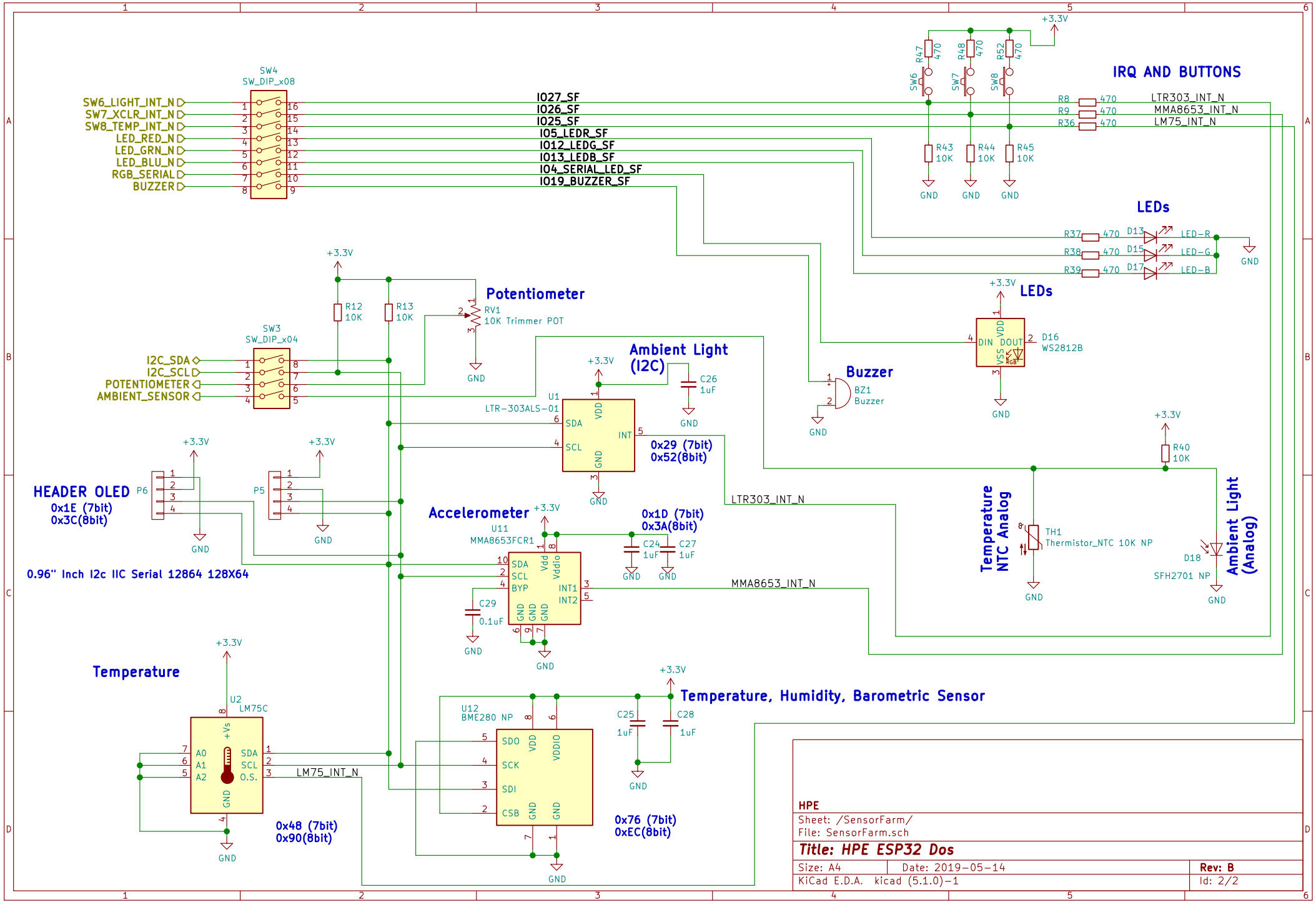

HPE
Sheet: /SensorFarm/
File: SensorFarm.sch

Title: HPE ESP32 Dos

Size: A4	Date: 2019-05-14	Rev: B
KiCad E.D.A. kicad (5.1.0)-1		Id: 2/2