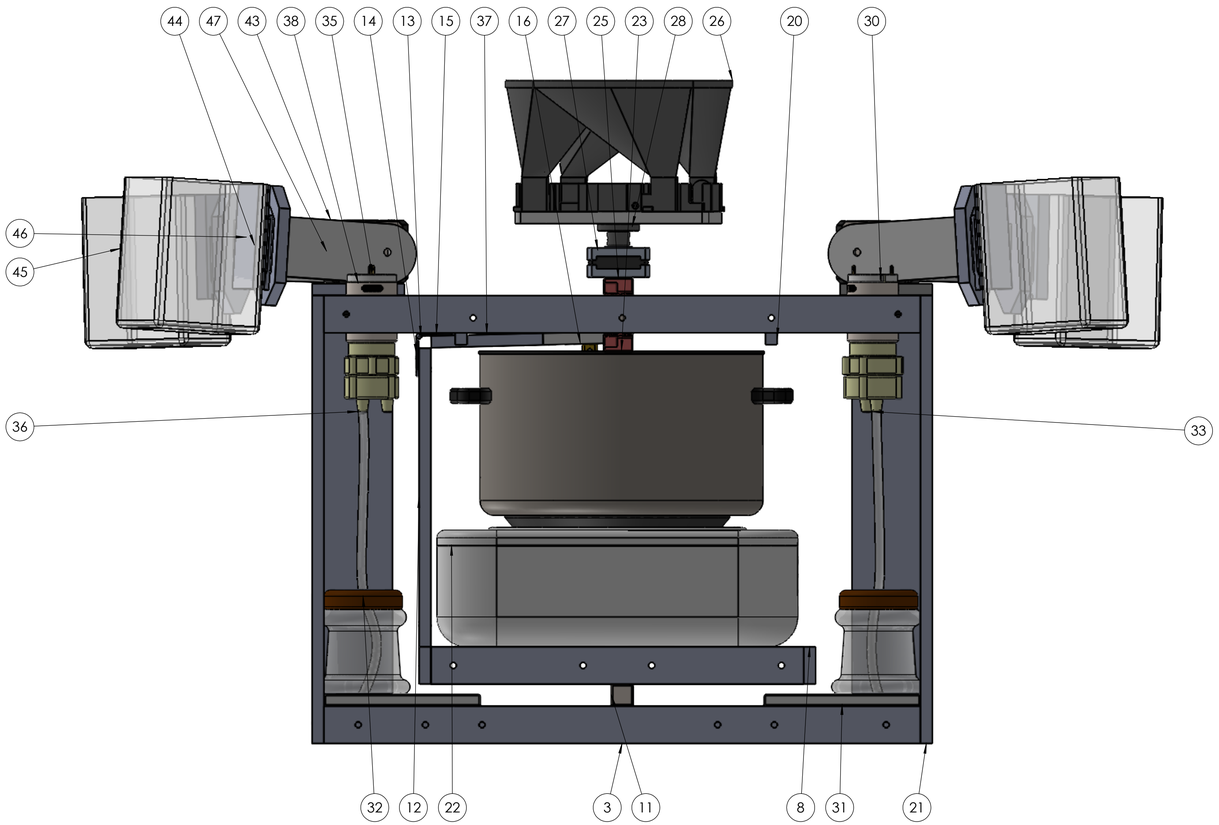

Main Assembly

ITEM NO.	PART NUMBER	DESCRIPTION	QTY.
1	Base_Front_Strip1		1
2	Base_Middle_Front_Strip		1
3	Base_Frontback_Strip1		1
4	Base_Side_Strip		2
5	Base_Inter_Lower_Strip 1		2
6	Base_Inter_Upper_Strip		2
7	Angle_Bracket		28
8	Heater_Stand_Front_Strip		2
9	Heater_Stand_Middle_Strip		2
10	Heater_Stand_Side_Stripe		2
11	weightLoadCell		1
12	verticalStrip		1
13	HingeBolt		1
14	editedHingePart		1
15	HingePart1		1
16	connectionStrip		1
17	motorConnector		1
18	rotorBlades		1
19	front strip		2
20	below supporting strip		3
21	verical wall		2
22	InductionStoveAssembly		1
23	Cooking_Pot		1
24	Rail_Guide_Slider		1
25	Rail_Guide_Top		1
26	Full_Four_Spice_Dispenser_1		1
27	Stepper_Motor		1
28	Flange_Coupling		1
29	Motor_Connector_1		1
30	Oil_Pump_DC_Motor1		1
31	Platform_For_Liquid_container		2
32	Liqiud_Container		2
33	Right_Container_Motor_Tube		1
34	Motor_Connector_2		1
35	Oil_Pump_DC_Motor2		1
36	Left_Container_Motor_Tube		1
37	horizontalTopStrip		1
38	Material_Disepnser_Base_Strip_Right		2
39	Stright_Front_Material_Strip		2
40	Horizontal_Side_Material_Strip		4
41	Stipper_Motor_For_Material_Disepnser		2
42	Material_Disepnser_Flange_Coupling		2
43	CONNECTING_STRIP_FOR_STIPPER_MOTOR		2
44	CONNECTING_STRIP_BETWEEN_COUPLE_AND_MATERIAL_CONTAINER		4
45	smallJar		4
46	Attachable_Part_1		4
47	Material_Container_And_Stipper_Motor_1		2

PROPRIETARY AND CONFIDENTIAL
THE INFORMATION CONTAINED IN THIS DRAWING IS THE SOLE PROPERTY OF <INSERT COMPANY NAME HERE>. ANY REPRODUCTION IN PART OR AS A WHOLE WITHOUT THE WRITTEN PERMISSION OF <INSERT COMPANY NAME HERE> IS PROHIBITED.

NEXT ASSY | USED ON
APPLICATION

UNLESS OTHERWISE SPECIFIED:
DIMENSIONS ARE IN INCHES
TOLERANCES:
FRACTIONAL ±
ANGULAR: MACH ± BEND ±
TWO PLACE DECIMAL ±
THREE PLACE DECIMAL ±
INTERPRET GEOMETRIC TOLERANCING PER:
MATERIAL
FINISH
DO NOT SCALE DRAWING

	NAME	DATE
DRAWN		
CHECKED		
ENG APPR.		
MFG APPR.		
Q.A.		

COMMENTS:
Test_New_base_assm_globalva

TITLE:
Bill of Material

SIZE D | DWG. NO. | REV
SCALE: 1:5 | WEIGHT: | SHEET 1 OF 1

SOLIDWORKS Maker Product. For Personal Use Only.