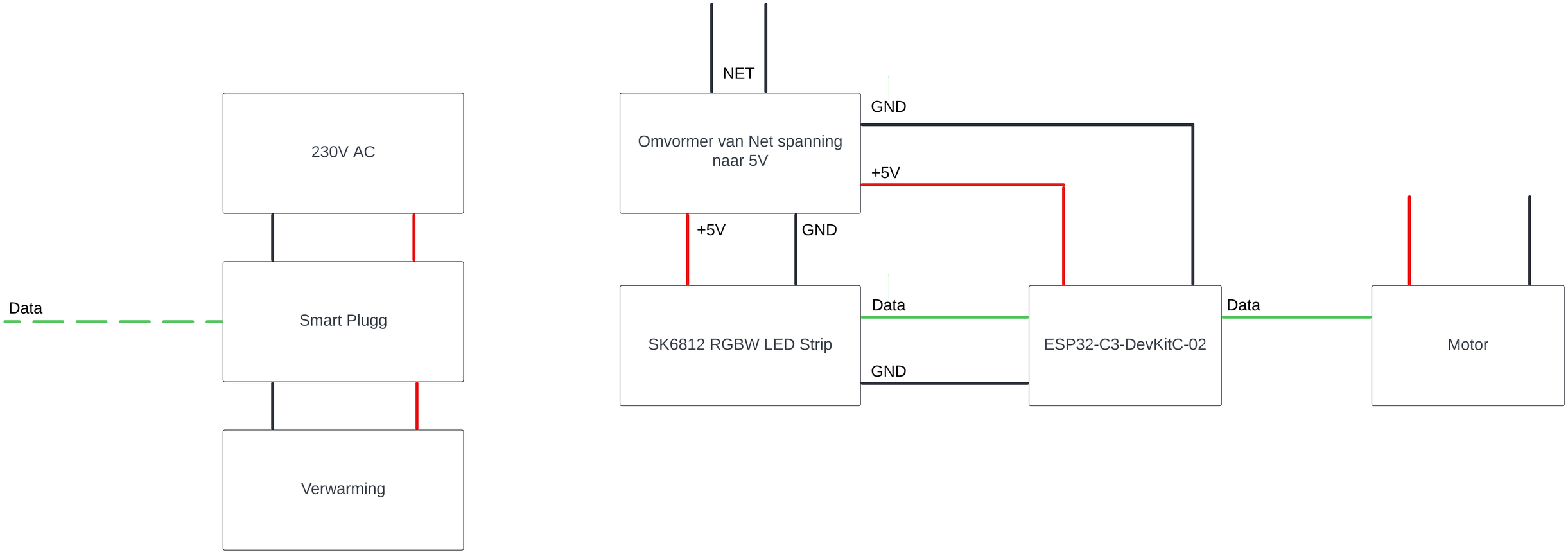
230V AC
Data
Smart Plugg
Verwarming
NET
Omvormer van Net spanning naar 5V
GND
+5V
+5V
GND
SK6812 RGBW LED Strip
Data
GND
ESP32-C3-DevKitC-02
Data
Motor