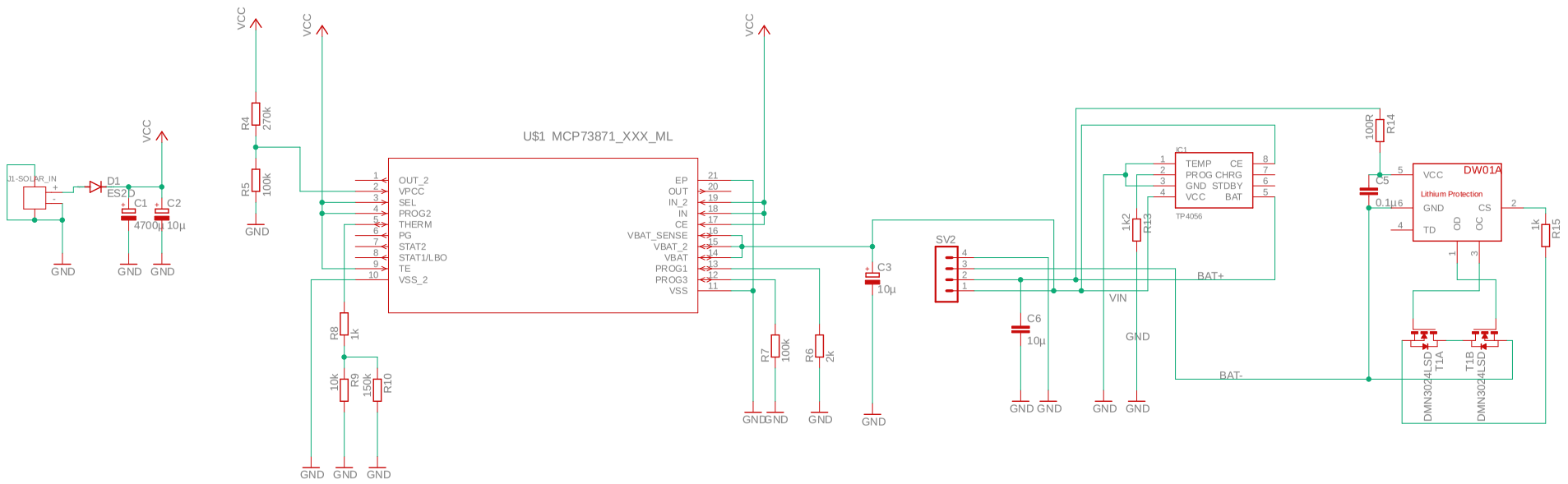

TITLE: final schematic power consumption board	
Document Number:	REV:
Date: 27/02/2020 21:09	Sheet: 1/1