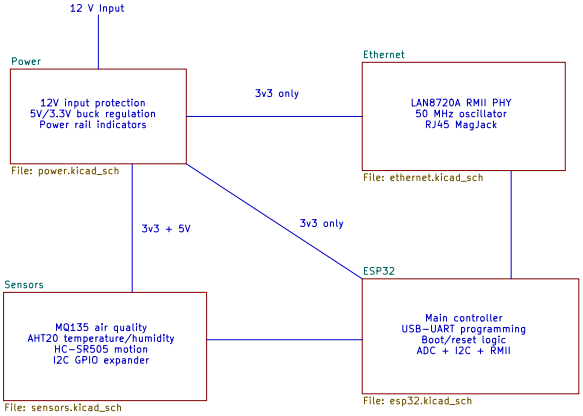
12 V Input
Power
12V input protection
5V/3.3V buck regulation
Power rail indicators
File: power.kicad_sch
3v3 only
Ethernet
LAN8720A RMII PHY
50 MHz oscillator
RJ45 MagJack
File: ethernet.kicad_sch
3v3 + 5V
3v3 only
Sensors
MQ135 air quality
AHT20 temperature/humidity
HC-SR505 motion
I2C GPIO expander
File: sensors.kicad_sch
ESP32
Main controller
USB-UART programming
Boot/reset logic
ADC + I2C + RMII
File: esp32.kicad_sch

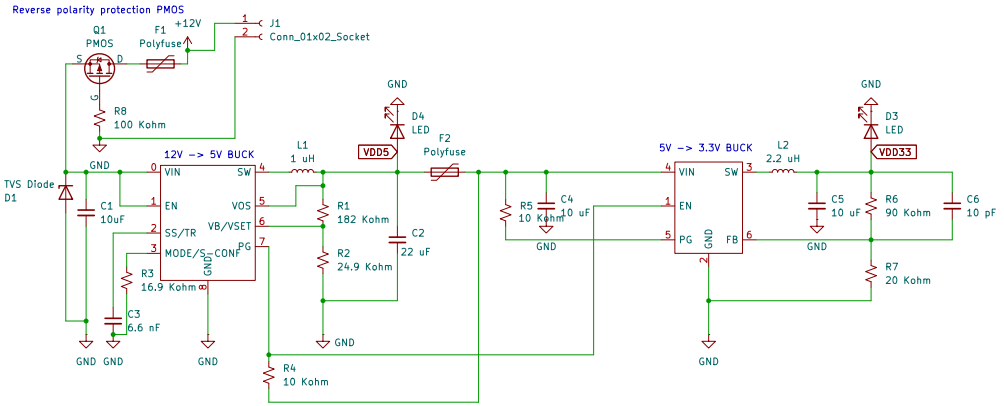
Reverse polarity protection PMOS
Q1
PMOS
S
D
G
F1
Polyfuse
+12V
J1
Conn_01x02_Socket
R8
100 Kohm
GND
D4
LED
VDD5
F2
Polyfuse
12V -> 5V BUCK
VIN
SW
EN
VOS
SS/TR
VB/VSET
MODE/SYNC
PG
GND
CONF
L1
1 uH
TVS Diode
D1
C1
10uF
R3
16.9 Kohm
C3
6.6 nF
R1
182 Kohm
R2
24.9 Kohm
C2
22 uF
R4
10 Kohm
R5
10 Kohm
C4
10 uF
5V -> 3.3V BUCK
VIN
SW
EN
PG
GND
FB
L2
2.2 uH
C5
10 uF
D3
LED
VDD33
R6
90 Kohm
R7
20 Kohm
C6
10 pF

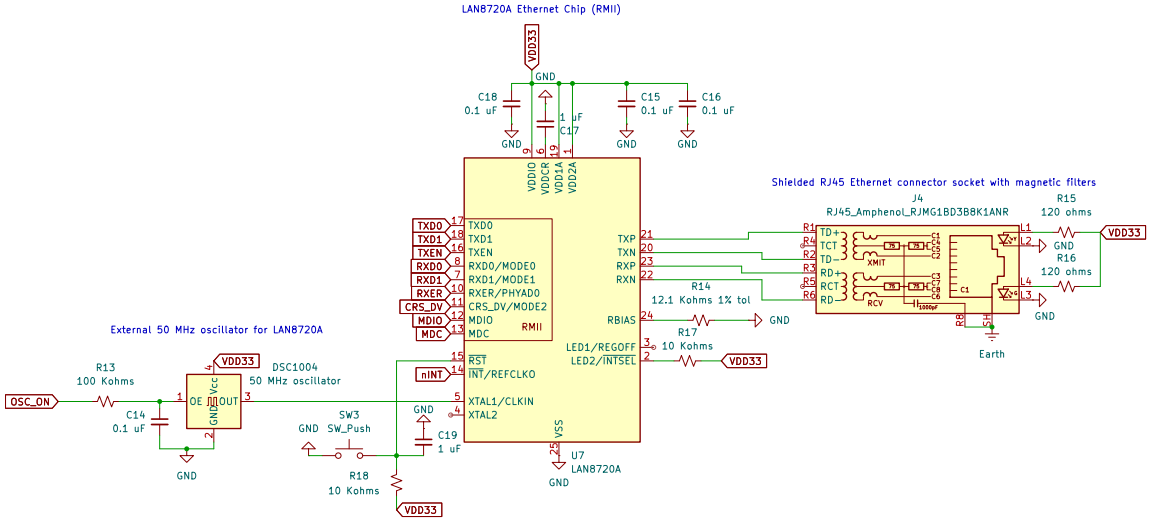
LAN8720A Ethernet Chip (RMII)
VDD33
GND
C18
0.1 uF
C17
1 uF
C15
0.1 uF
C16
0.1 uF
VDDIO
VDDCR
VDD1A
VDD2A
TXD0
TXD1
TXEN
RXD0/MODE0
RXD1/MODE1
RXER/PHYAD0
CRS_DV/MODE2
MDIO
MDC
RMII
TXP
TXN
RXP
RXN
RBIAS
LED1/REGOFF
LED2/INTSEL
RST
INT/REFCLKO
XTAL1/CLKIN
XTAL2
VSS
U7
LAN8720A
R14
12.1 Kohms 1% tol
R17
10 Kohms
nINT
Shielded RJ45 Ethernet connector socket with magnetic filters
J4
RJ45_Amphenol_RJMG1BD3B8K1ANR
TD+
TCT
TD-
RD+
RCT
RD
XMIT
RCV
C1
R15
120 ohms
R16
120 ohms
L1
L2
L3
L4
Earth
External 50 MHz oscillator for LAN8720A
R13
100 Kohms
OSC_ON
C14
0.1 uF
DSC1004
50 MHz oscillator
OE
Vcc
GND
OUT
SW3
SW_Push
R18
10 Kohms
C19
1 uF

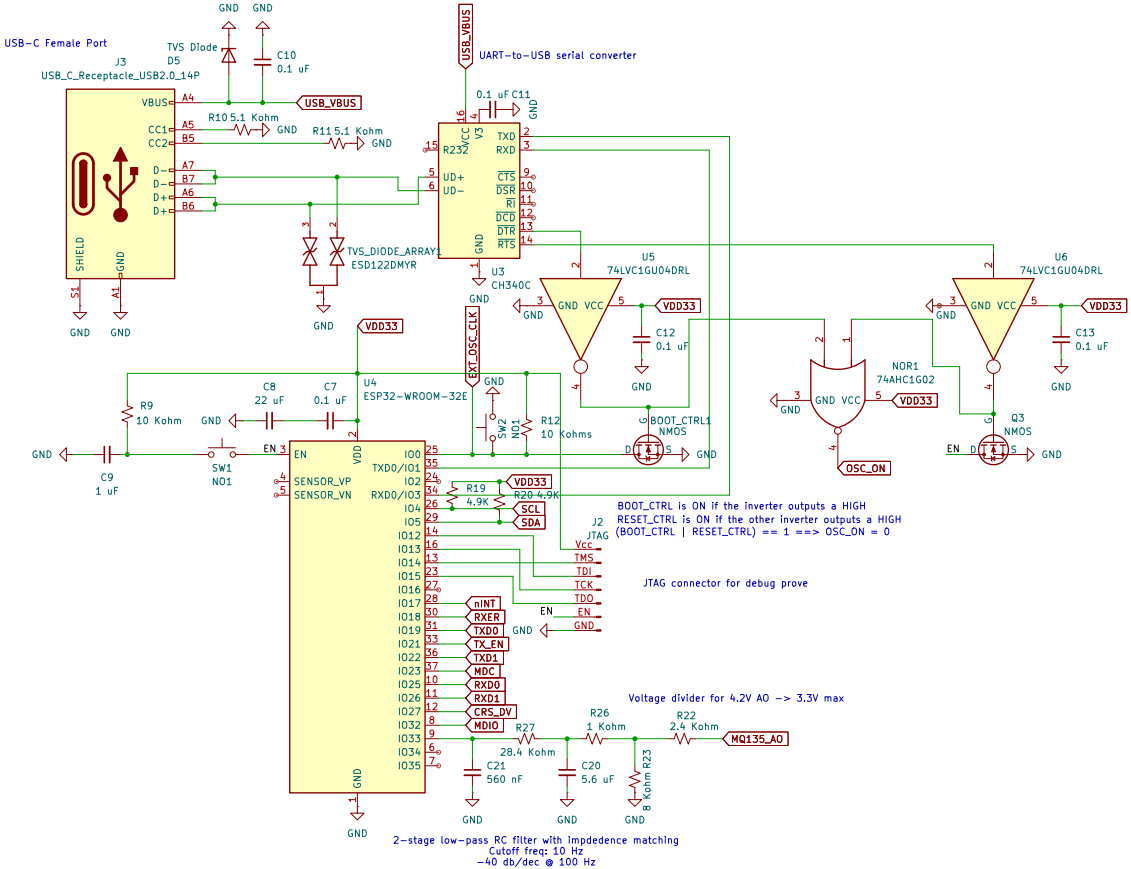
USB-C Female Port
J3
USB_C_Receptacle_USB2.0_14P
TVS Diode
D5
C10
0.1 uF
USB_VBUS
R10 5.1 Kohm
R11 5.1 Kohm
GND
VBUS
CC1
CC2
D-
D-
D+
D+
SHIELD
TVS_DIODE_ARRAY1
ESD122DMYR
UART-to-USB serial converter
C11
0.1 uF
R232
VCC
V3
UD+
UD-
TXD
RXD
CTS
DSR
RI
DCD
DTR
RTS
U3
CH340C
U5
74LVC1GU04DRL
U6
74LVC1GU04DRL
VDD33
C12
0.1 uF
C13
0.1 uF
EXT_OSC_CLK
U4
ESP32-WROOM-32E
R9
10 Kohm
C8
22 uF
C7
0.1 uF
C9
1 uF
SW1
NO1
EN
SW2
NO1
R12
10 Kohms
BOOT_CTRL1
NMOS
NOR1
74AHC1G02
OSC_ON
Q3
NMOS
R19
4.9K
R20 4.9K
SCL
SDA
J2
JTAG
VCC
TMS
TDI
TCK
TDO
EN
GND
nINT
RXER
TXD0
TX_EN
TXD1
MDC
RXD0
RXD1
CRS_DV
MDIO
BOOT_CTRL is ON if the inverter outputs a HIGH
RESET_CTRL is ON if the other inverter outputs a HIGH
(BOOT_CTRL | RESET_CTRL) == 1 ==> OSC_ON = 0
JTAG connector for debug prove
Voltage divider for 4.2V AO -> 3.3V max
R27
28.4 Kohm
R26
1 Kohm
R22
2.4 Kohm
MQ135_AO
C21
560 nF
C20
5.6 uF
8 Kohm R23
2-stage low-pass RC filter with impdedence matching
Cutoff freq: 10 Hz
-40 db/dec @ 100 Hz

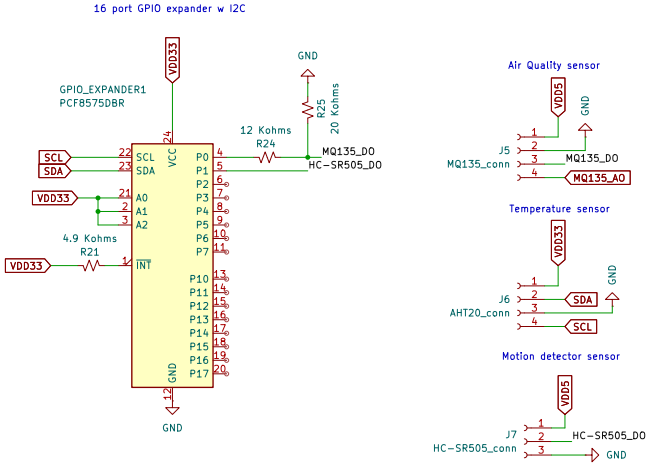
16 port GPIO expander w I2C
GPIO_EXPANDER1
PCF8575DBR
VDD33
VCC
24
SCL
SDA
22
23
VDD33
21
2
3
A0
A1
A2
4.9 Kohms
R21
VDD33
1
INT
P0
P1
P2
P3
P4
P5
P6
P7
P10
P11
P12
P13
P14
P15
P16
P17
4
5
6
7
8
9
10
11
13
14
15
16
17
18
19
20
GND
12
GND
12 Kohms
R24
MQ135_DO
HC-SR505_DO
GND
R25
20 Kohms

Air Quality sensor
VDD5
GND
J5
MQ135_conn
1
2
3
4
MQ135_DO
MQ135_AO
Temperature sensor
VDD33
GND
J6
AHT20_conn
1
2
3
4
SDA
SCL
Motion detector sensor
VDD5
J7
HC-SR505_conn
1
2
3
HC-SR505_DO
GND