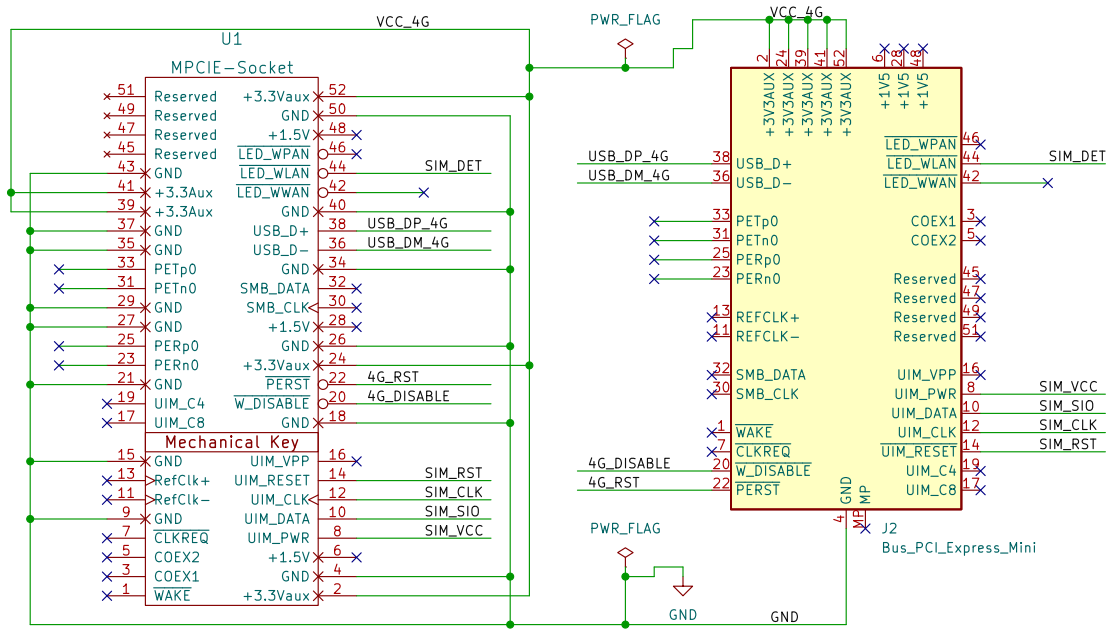

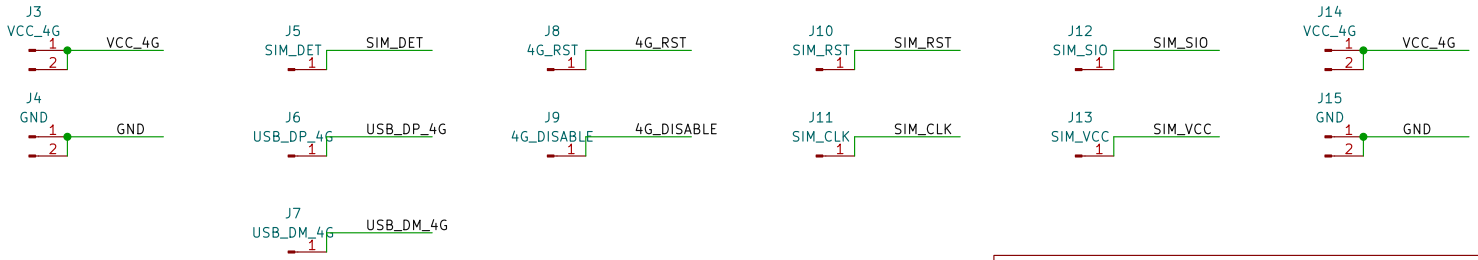

Sheet: /
File: mpcie1extv01.kicad_sch

Title: mpcie1extv01

Size: USLetter	Date: 2022-07-28	Rev: v01
KiCad E.D.A. kicad (6.0.2)		Id: 1/1