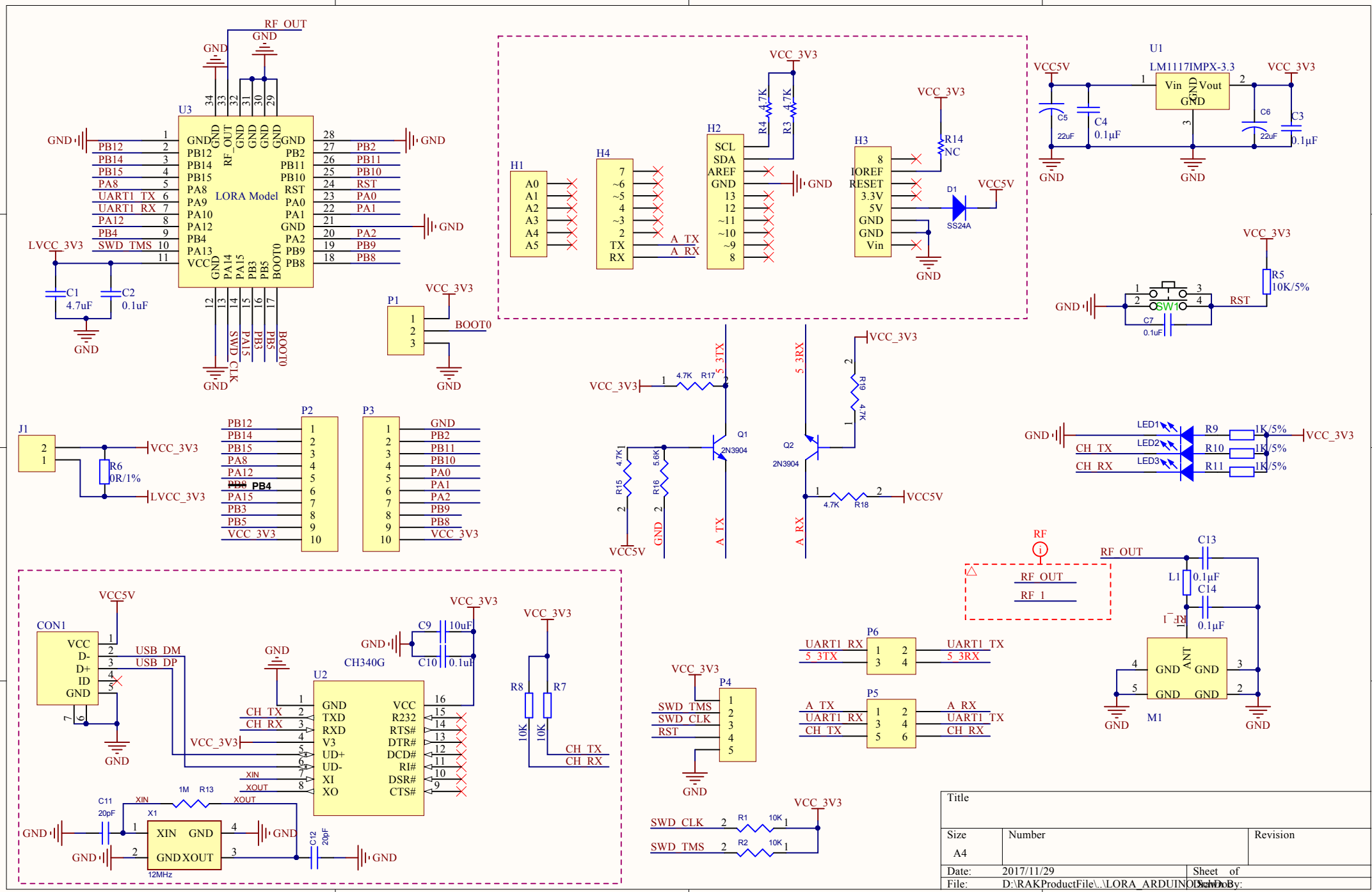
U3
LORA Model
RF_OUT
GND
LVCC_3V3
C1 4.7uF
C2 0.1uF
PB12
PB14
PB15
PA8
UART1_TX
UART1_RX
PA12
PB4
SWD_TMS
PA9
PA10
PA12
PB4
PA13
VCC
PB2
PB11
PB10
RST
PA0
PA1
PA2
PB9
PB8
SWD_CLK
PA15
PB3
PB5
BOOT0
P1
VCC_3V3
H1
A0
A1
A2
A3
A4
A5
H4
A_TX
A_RX
H2
SCL
SDA
AREF
R4 4.7K
R3 4.7K
H3
IOREF
RESET
3.3V
5V
Vin
R14 NC
D1 SS24A
VCC5V
U1
LM1117IMPX-3.3
Vin
Vout
C5 22uF
C4 0.1µF
C6 22uF
C3 0.1µF
R5 10K/5%
SW1
C7 0.1uF
RST
J1
R6 0R/1%
P2
P3
Q1 2N3904
Q2 2N3904
R17 4.7K
R15 4.7K
R16 5.6K
R19 4.7K
R18 4.7K
5_3TX
5_3RX
LED1
LED2
LED3
R9 1K/5%
R10 1K/5%
R11 1K/5%
CH_TX
CH_RX
RF
RF_OUT
RF_1
C13
L1 0.1µF
C14 0.1µF
M1
ANT
CON1
VCC
D-
D+
ID
GND
USB_DM
USB_DP
U2
CH340G
TXD
RXD
V3
UD+
UD-
XI
XO
R232
RTS#
DTR#
DCD#
RI#
DSR#
CTS#
C9 10uF
C10 0.1uF
R8 10K
R7 10K
XIN
XOUT
C11 20pF
C12 20pF
1M R13
X1
12MHz
P4
P5
P6
UART1_RX
UART1_TX
5_3TX
5_3RX
A_TX
A_RX
R1 10K
R2 10K
Title
Size
A4
Number
Revision
Date: 2017/11/29
Sheet of
File: D:\RAKProductFile\..\LORA_ARDUINO.SchDoc
Drawn By: