NOVATEUR PUBLICATIONS
INTERNATIONAL JOURNAL OF INNOVATIONS IN ENGINEERING RESEARCH AND TECHNOLOGY
[IJIERT] ISSN: 2394-3696 Website: ijiert.org

VOLUME 10, ISSUE 9, Sep. -2017

COMPETITIVE SOLAR CAR DESIGN: ENGINEERING SUSPENSION, STEERING, AND TRACTION FOR PERFORMANCE AND SUSTAINABILITY

Marcus Wong
Department of Engineering Mechanics, Virginia Tech University, Blacksburg, USA
wong.marcus@vt.edu

Rajiv Menon
Department of Mechanical Engineering, Virginia Tech University, Blacksburg, USA

Yoshiki Nakamura
Department of Mechanical Engineering, Virginia Tech University, Blacksburg, USA

Julia Fernandes
Department of Mechanical Engineering, Virginia Tech University, Blacksburg, USA

Carlos Tejada
Department of Mechanical Engineering, Virginia Tech University, Blacksburg, USA

Emilia Nowicka
Department of Mechanical Engineering, Virginia Tech University, Blacksburg, USA

Abstract
This work details the intricate design and analysis of suspension, steering, and traction subsystems for a competitive solar-powered vehicle, integral to modern eco-friendly transportation. The team prioritized a multidisciplinary approach, balancing stringent safety and performance standards with the sustainability objectives of solar vehicle racing. Each subsystem was engineered to optimize vehicle responsiveness, minimize weight, and ensure reliability under varied race conditions. Emphasis was placed on rigorous modeling—using advanced CAD and simulation tools—to predict mechanical performance and identify potential failure modes. Key challenges included selecting lightweight yet robust materials, achieving precise steering geometry for predictable handling, and delivering efficient torque for both acceleration and endurance. Solutions such as regenerative braking and anti-roll mechanisms were incorporated to further enhance energy efficiency and control. This research demonstrates that a systematic, iterative design process—grounded in engineering best practices and validated through prototype testing—yields a robust and competitive solar racing platform. The insights provided can inform future developments in sustainable automotive engineering, particularly in projects where mechanical efficiency is paramount. Our findings substantiate the importance of mechanical subsystem optimization in augmenting the efficiency, safety, and competitive edge of solar vehicles within the broader landscape of green transportation.

Keywords: solar car, suspension, steering, braking, traction system, stress, kinematic, handling, stability

Introduction

The increasing demand for clean energy and the need to reduce the carbon footprint has led to the development of solar-powered vehicles. The design and construction of a solar car requires a multidisciplinary approach, integrating various subsystems such as structural, electrical, and mechanical systems. The interest in solarpowered vehicles has emerged as a prominent area of study, primarily driven by academic institutions seeking to promote sustainable mobility. worldwide Competitions have encouraged students, engineers, and researchers to develop highly energy-efficient cars and evaluate their performance. Designing such cuttingedge vehicles presents various challenges, including battery selection, electrical systems, solar panel design, structural materials, aerodynamics, safety, mechanical sub-systems, such as suspensions and steering mechanisms and eventually integration.

It is crystal clear that solar-powered cars provide a unique test bed for mechanical and structural design. They have distinctive functional and technical aspects that differentiate them from other competition vehicles, such as traditional race cars. The specific requirements of solar-powered cars demand innovative design solutions. In terms of mechanical subsystems, like suspension systems, the load imposed by passengers, electric batteries, and solar panels can indeed surpass the weight of the remaining vehicle components. As a result, selecting the suitable suspension architecture, stiffness/damping parameters and achieving optimal weight distribution become crucial challenges in achieving superior vehicle dynamics performance. In this paper, it has been focused on the design process of critical mechanical subsystems for a single occupancy vehicle, carried out by the Virginia Tech Solar Car Project team. The subsystems of interest in this paper are suspension, steering, braking system, wheels and tires. The balancing design of these subsystems is crucial for the expected performance and safety of the vehicle. Our approach prioritizes compliance with the solar car regulations to ensure the highest possible efficiency.

The development of these subsystems follows a systematic V-profile approach, where each subsystem is sequentially cascaded and integrated. This process involves close collaboration with the corresponding suppliers to ensure seamless integration and compatibility between the subsystems. By adopting this structured approach, the solar car project could achieve an efficient integration and synchronization of the various subsystems, leading to a cohesive and optimized overall design. This paper serves as a continuation of Part I, which focused on the structural chassis design [1].The subsequent papers in this series will delve into other essential aspects of the solar car design, including electrical systems (Part III) and test and validation (Part IV) [2]. Together, these papers provide a comprehensive exploration of the solar car project, highlighting the integration of diverse subsystems to achieve outstanding performance and sustainable transportation.[3]

1. Customer Needs and Target Setting

Designing key mechanical systems such as front and rear suspension systems, steering, traction systems, and the roll cage for a solar car presents significant challenges due to conflicting parameters that require tradeoffs. In the initial stages, specific customer requirements and engineering specifications with corresponding weighting factors are collected and summarized. using the Quality Function Development (QFD) approach. This facilitates the translation of customer needs into well-defined engineering requirements and allowed for their prioritization [4]. Ensuring the safety of the design involves comprehensive analysis of various scenarios

that the solar car may encounter. To achieve this, a suitable factor of safety is selected to guarantee that the structure would not fail even under worst-case conditions. Furthermore, optimization of the final design is being performed to satisfy the requirements of the structure, manufacturing, and aerodynamic teams. Lastly, a functional decomposition process is employed to break down the functions of the subsystems into smaller categories, enabling more detailed analysis and evaluation. This systematic approach facilitates a comprehensive understanding of the design requirements and supported the decision-making process throughout the design phase.[5]

1.1.Suspension

The suspension system plays a crucial role in connecting the solar car to the road surface. It needs to fulfill two primary requirements: durability and efficiency. Durability necessitates the suspension's ability to withstand significant loads such as 1G turning load, 1G braking load, and 2G bump load. To ensure efficiency, the suspension design should minimize road load resistance, encompassing rolling resistance and drag. Parameters such as wheel scrub and package size have an impact on aerodynamic resistance, with a smaller package size reducing the frontal area of the vehicle's aeroshell. In solar cars, the suspension is not designed for providing a smooth ride because soft suspensions absorb the car's motion when encountering bumps, resulting in energy wastage. Therefore, solar cars typically employ a very stiff suspension to achieve a good stability and handling performance as well as to prevent frame damage during dynamic severe conditions. To assess the vehicle's ride and handling, the team utilized the SAE J1441 201609 standard, which provides a subjective rating scale for evaluating ride quality and converting it into quantitative data. By considering the driver's perception and rating of ride quality, adjustments to suspension stiffness and damping can be made to fine-tune the solar car's performance. [6],[7]

1.2. Steering

The design of the steering system presents two main challenges: determining the location of the steering rack and selecting the appropriate type of steering system. Design limitations are encountered due to the minimum turning radius requirement and packaging restrictions imposed by the chassis system. The target specifications for the steering system, aims to deliver a safe and reliable steering experience. These specifications included:

- Precise Steering Control: Minimizing steering backlash to reduce any free play or looseness in the system before response or movement occurs.
- Strength and Stiffness: Ensuring that the steering system can handle the forces exerted during steering maneuvers.
- Low Steering effort: Requiring minimal driver effort to turn the wheels, enhancing driving comfort.
- Minimal Turning Radius: Allowing the vehicle to make tight turns in confined spaces, with a U-turn radius requirement of under 16m.
- Compatibility with Suspension System: Ensuring stability and optimal handling on different terrains by coordinating with the suspension system.
- Structural Durability: Designing the steering system to withstand the stresses transmitted through the suspension and wheels.

To meet these requirements, a rack-and-pinion power steering system was considered, incorporating lightweight components. Extensive simulations and testing were conducted to ensure that the steering system met or exceeded all performance requirements and safety standards.[8]

1.3 Traction system

The traction system of the solar car comprises two key components: the wheels and tires assembly, and the braking system. To design our subsystem to meet the customer needs and target specifications, the rules and regulations outlined in the solar car competition regulation was used. According to the design requirements, the braking system was designed as a dual balanced system, with each brake system operating independently. The average acceleration of the car on a level wet road must be a minimum of 0.47g. Additionally, the fully loaded car should remain stable and not tip when lifted at a 45-degree angle. On a reasonably smooth road, this means that the tyres should slide before the car rolls. The Static Stability Factor for a four-wheeled vehicle with the same track front and rear is defined as SSF = t/2h, where t is the track width and h the height of the center of gravity above the road. An SSF of at least 1 is usually considered desirable. However, having a good SSF is no guarantee that the car will not roll over because suspensions, steering, braking, tires are key players for achieving dynamic stability of the car.

As no ABS (Anti-lock Braking System) is fitted, the front brake system should lock before the rear brake systems engage. It is also crucial to ensure adequate brake pedal clearance for driver application.[9]

2. Suspension design

2.1 Suspension concept design

The selection of the double wishbone suspension setup is determined to be the most suitable choice among the potential suspension concepts due to its superior kinematic performance. The design focus was directed towards minimizing wheel scrub, optimizing the location of the roll center, and reducing bump steer. The double wishbone system offers several advantages, including relative lightness, high efficiency, and compliance with the FIA safety test and target requirements. While the trailing arm suspension performed well, it is unsuitable for the rear suspension due to increased weight. Therefore, the decision is made to utilize double wishbone configuration for the entire vehicle. The double wishbone system, commonly employed in sports and racing cars, features independent suspension in the front and rear, offering improved kinematics and aerodynamics. In our design, the upper arm is designed to induce negative camber as the suspension rises, compensating for the positive camber gain during body roll in turns. This design aims to maintain the tire perpendicular to the ground, particularly crucial for the outer tire experiencing weight transfer during cornering. The solar car design incorporates long uprights mated onto high-mounted wishbones, which reduces the thickness of the wheel fairings, thereby enhancing aerodynamic performance. A virtual mock-up is developed in Solidworks based on the packaging layout, as illustrated in Fig 1. We strived for zero bump steer to maximize vehicle safety, as bump steer can lead to instability and unpredictable behavior. Additionally, it is essential to ensure that our suspension system functions effectively at the target speed. Lateral movement, known as scrub, is undesirable in our suspension system, and our design aims to minimize it, ideally achieving zero lateral scrub.[10]

The weight of the suspension system is a critical factor in achieving the maximum target speed. Our objective is to ensure that the total suspension weight remains below ⅛ of the total vehicle weight. The double wishbone design allows for potential weight reduction.

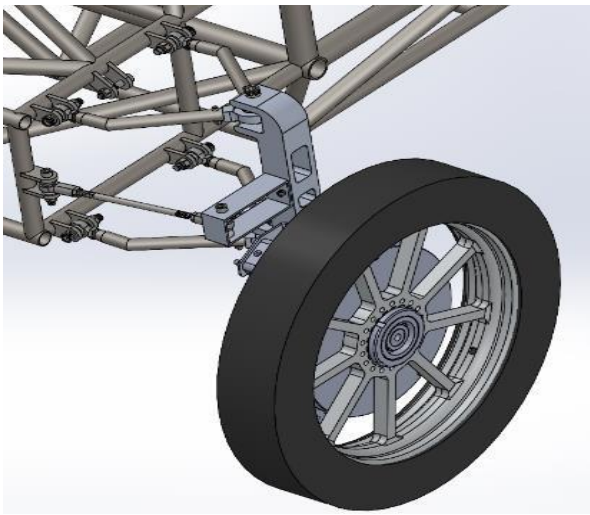

Fig 1 virtual mock-up of the suspension system using Solidworks

At higher speeds, any road irregularities or changes in direction will impose increasing loads on the suspension. To ensure system reliability, we will design for worst-case load scenarios based on load cases, accounting for the impact of bumps and dissipating significant amounts of energy.

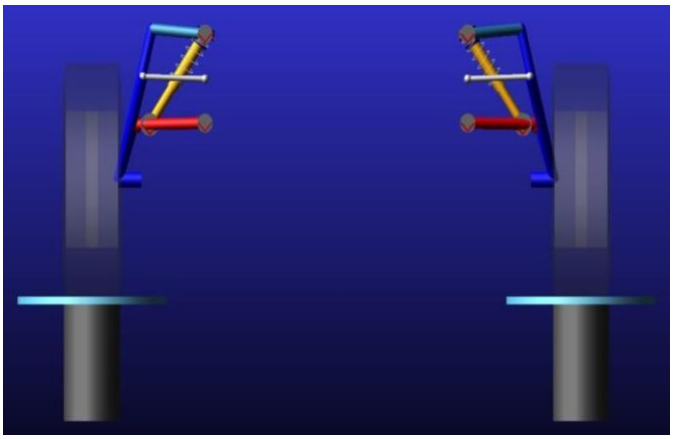

Fig 2 ADAMS model of front suspension

2.2 Kinematic analysis of the suspension system

The geometry and kinematics of the suspension system were modeled and designed using ADAMS software. This powerful software enabled us to create a detailed 3D model of the suspension and analyze various scenarios to determine the appropriate geometry and hardpoints for the suspension system, as depicted in Fig 2. Our main focus was on minimizing bump steer and scrub, as these factors can significantly decrease the efficiency of the car and pose potential safety risks. After successfully minimizing these values, we proceeded to minimize camber change throughout the suspension travel. Additionally, we incorporated a small caster angle to promote straight-line tracking and enhance steering stability. Another design consideration is trying to achieve a close-to-zero scrub radius, which further contributes to minimizing bump steer effects. The specifications outlining the suspension geometry are provided in Table 1 [11].

Table 1 Technical specifications of suspension results from Adams Car Modeling

Input Parameters		
Horizontal Distance Between Chassis Mounting Points	9	Inches
Vertical Distance Between Chassis Mounting Points	9	Inches
Bottom Wishbone Length	9	Inches
Top Wishbone Length	6.75	Inches
Caster Angle	7	Degrees
Camber Angle	0	Degrees
Toe Angle	0	Degrees
Tube Radius	0.75	Inches
Tire Unloaded Diameter	21.9291	Inches
Upper Wishbone Angle Above Horizontal	4.52	Degrees
Lower Wishbone Angle Above Horizontal	-1.1	Degrees
Distance Between LCA Upright MP and Lower Shock MP	2	Inches
Vertical Distance Between Lower Chassis MPs and Wheel Center	5.7343	Inches
Horizontal Distance Between LCA Upright MP and Wheel Center	5.3701	Inches
Horizontal Distance Between Center of Upright and Tie Rod Location	6	Inches
Vertical Distance Between Pinion Loaction and Steering Wheel	6	Inches
Horizontal Distance Between Pinion Location and Steering Wheel	76	Inches
Total Length of Steering Rack	11.25	Inches

This virtual model played a crucial role in conducting a wheel envelope analysis. The current kinematic design of the suspension system can be observed in Appendix A.

2.3.Shock absorber and spring selection and its Mounting

When it comes to selecting shock absorber damping and spring stiffness, we opted it for stiffer springs in our design. It is common for race cars to have a natural frequency of around 2-3 Hz, which aligns with characteristics of our vehicle. While handling may not be the primary focus, we cannot overlook it due to the safety requirements set by the FIA regulations.

To design a damper/spring configuration, our main criteria are to find one that could fit within our packaging constraints, provide a natural frequency of approximately 2.5 Hz, allow three inches of wheel travel, and support a quarter of the car's weight. Additionally, we aim for a linear motion ratio and used around 1.6 inches of shock absorber stroke for three inches of wheel travel, as depicted in Fig 3. In this graph, the vertical axis represents the compression of the shock, while the horizontal axis illustrates the wheel movement. Given the simplicity and favorable performance characteristics, we decided to direct the lower mount of our shocks to the lower wishbone and the upper mount to the chassis frame.

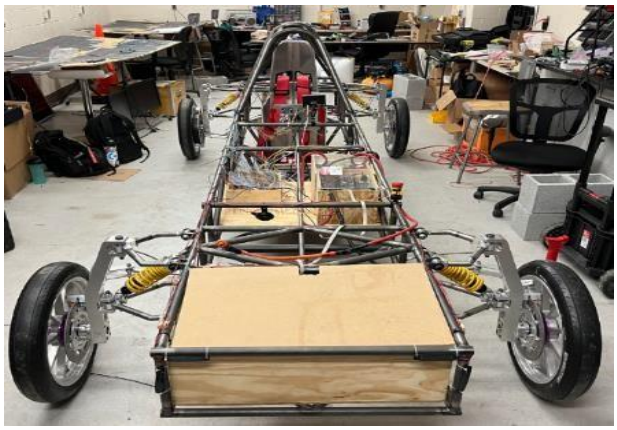

Fig 3: shock length vs wheel travel in the assembly position

2.4. Suspension structural analysis

When determining loading criteria and potential failure modes for the suspension, the defined load cases in the solar car regulation were considered. For the suspension and steering systems, the analysis should include a minimum of 1G turn, a 2G bump, and 1G braking load cases, with a focus on the worst-case condition when these loads are combined. It is crucial to apply these loads at the wheel patch where the tire contacts the ground. Fig 4 shows stress distribution of one load case using ANSYS.[12]

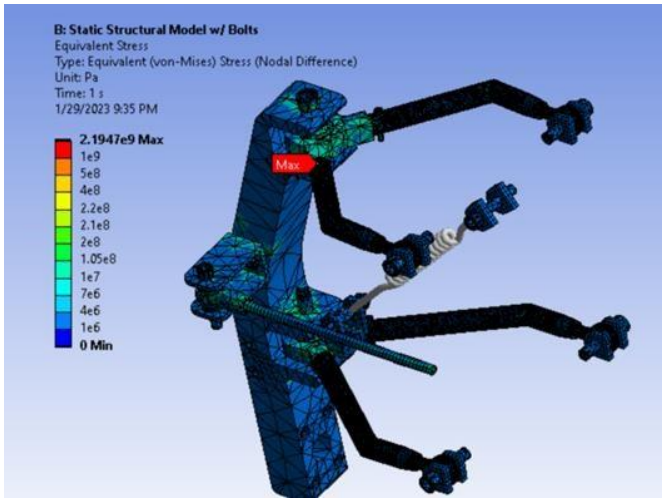

Fig 4: FEA of Suspension assembly

3. Steering mechanism design 3.1.Steering concept selection

The steering concept of our solar car design posed an important decision due to balancing challenging constraints and requirements. It is selected be a rack and pinion type of system but to position the steering rack whether in front or behind the front axis is important. Our goal is to find an optimal configuration that would ensure proper Ackermann turning and maintain a compact size profile. After careful consideration, we initially chose the front axis for steering due to its simplicity compared to back axis steering. While exploring various steering options, we briefly examined alternatives to the traditional rack and pinion system, but none proved to be more suitable for our needs.[13]

The design goal of this system is to minimize bump steering, scrub and backlash, pass the slalom and "figure 8" tests while maintaining structural integrity. In order to minimize loss of efficiency through bump steering and scrub, the first step is to determine the steering knuckle. The steering knuckle will be placed behind the front axle on the kingpin axis. The design of the steering system model is shown in Fig 5.The basic components of our steering system includes steering column, rack and pinion, tie rods, steering stops, and steering knuckles.

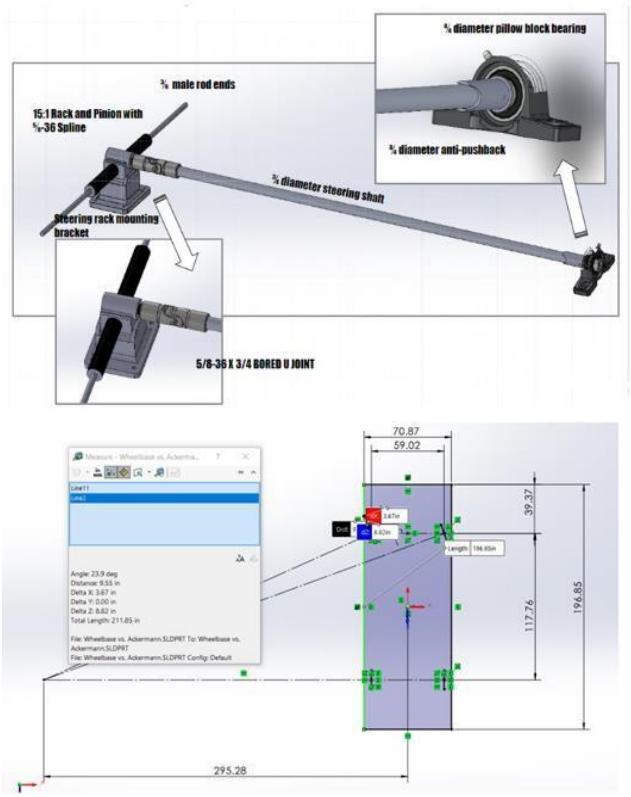

Fig 5 Steering system assembly and Ackerman geometry

3.2. Steering Design

Based on the Ackermann steering model developed in SolidWorks with track width and wheelbase from chassis design, inner and outer steering angle were calculated 23.90 and 19.93 deg respectively, Fig 5. In the Ackermann geometry model, the turning radius is set to 295.28 inches (7.5 meters). This turning radius gives our vehicle enough space to pass maneuverability tests. Designing our Ackermann steering with this set radius ensures that when we are doing the figure 8, U-turn, and Slalom tests, we can still achieve Ackermann geometry to maintain efficiency. (Appendix B) Our design's maximum inner and outer steering angle will be 25 and 21 deg respectively. Across solar car competition, steering ratio between15:1 and 18:1 can provide accurate steering while maintaining good maneuverability. For our design, we considered a 15:1 steering rack from Stiletto's small box steering rack line with a total rack travel of 4-⅝ in, ⅝-36 spline, and 3/8 in rod ends. This rack will provide enough rack travel to meet the max steering angle, and it is very lightweight (2.50 lbs), and fits all needed constraints to maintain vehicle efficiency.

An anti-pushback device will be placed before the bearing to ensure driver safety when taking sharp turns or facing big bumps on the road. The tie rods were very important because it is one of the main components that

makes our steering system a valid system. Tie rod length and angle is integral to minimizing bump steering which is one of the major requirements from our competition regulations.

Another crucial design for the steering system is the steering stop. Steering stop's purpose is to limit rack travel, especially during emergency situations. The forces on the steering stops should be considered significant impact loads that could occur during emergency situations. This sleeve is limited by a washer and jam nut at one end of the pipe sleeve, and when the steering box hits the PVC sleeve, it would stop the rack travel which ultimately limits steering angle.

4. Traction systems design

4.1 Braking System

The braking system is designed to be a dual, front-rear redundant, hydraulic braking system with separate master cylinders to conform with 10.5.A. The brake calipers attaching directly to the steering knuckle via a mounting bracket. There will be flexible brake lines that will attach from the calipers both on the front and rear of the vehicle to hard steel brake lines that will run back to the respective front and rear master cylinders. When the brake pedal is pressed, a balancing bar will separate the amount of pressure sent to the front and rear master cylinders. The two master cylinders will be mounted towards the front of the vehicle, not too far behind the pedals in order to allow a quick connection between foot pedal rod and cylinder piston. According to the braking configuration shown in Figure 9, our calculation demonstrated that more weight to be distributed to the front wheels under hard braking, which is essential to allow our driver to maintain vehicle control should the front wheels lock up. The brake pads being used are high friction materials attached directly to the Tolomatic H10 caliper to comply the requirements in 10.5.B. [14[,[15]

4.2 Wheel assembly

The hub kit is off-the-shelf piece being purchased from supplier basket. Tires used in this project were DOT compliant Bridgestone Ecopia Ologic 95/80R16 which complies 10.2.D requirements. Tire was inflated to 499.99kPa which matches the pressure listed in the Stackpole Engineering for Bridgestone Americas development. It is a tubeless tire with Speed Rating of 130km/h. This surpasses the solar car's anticipated max speed of less than 65km/h.

To validate the spacer and spindle (off-the-shelf NOMURA race hub kit) for our solar car, FEA was performed. Fixed supports were assigned to the spacer inside face and bolt holes. Gravity and loads of 2G bump, 1G brake, and 1G cornering were applied to the spindle faces. The results, presented in Fig 6, illustrate that the maximum displacement was approximately 0.2mm, and the safety factor for stress was greater than
3.

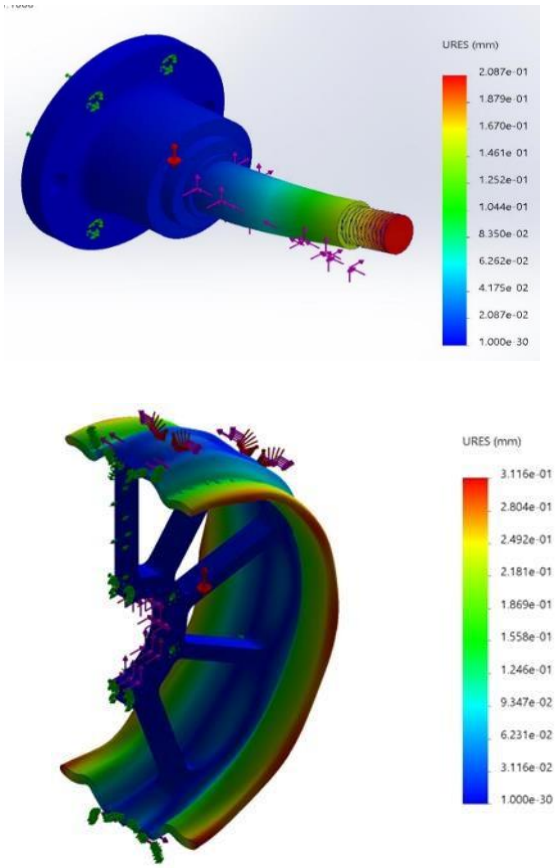

Fig 6: FEA of spindle and rim

The rim was designed by the project team to meet the bead requirements specified by the tire manufacturer. To validate the custom aluminum wheel design, SolidWorks FEA is employed to simulate the applied loads and analyze stress and deformation. The simulation utilized Al 6061-T6 as the assigned material, and appropriate boundary conditions were applied, including roller support on the inner hub face and fixed supports on bolt holes. The external load cases considered in the analysis were: 1. Gravity, 2. Tire air pressure of 72.5 psi acting on the non-contact faces of the rim, 3. Reaction forces of 13553 N applied to each rim flange, 4. Bump forces equivalent to 2G's acting as bearing loads on the center bore (1619 N) assuming even distribution of the vehicle weight (330 kg) among the four wheels, and 5. Braking forces equivalent to 1G acting as bearing loads on the center bore (809 N). The results demonstrate a safety factor of 1.96 in stress and a maximum deformation of 0.3 mm, both well within the team's acceptable limits, affirming the satisfactory design performance.

5. Conclusion

This paper presented the comprehensive design and analysis of the mechanical subsystems, specifically the suspension, steering, and traction systems, for a solar-powered car. The design process involved considering various constraints, regulations, and design best practices to develop innovative and efficient solutions. Through rigorous analysis and simulation using advanced software tools, the performance and reliability of the subsystems were evaluated.

The suspension system was optimized to provide superior kinematic performance, minimize wheel scrub, and achieve optimal weight distribution. The double wishbone suspension design was chosen for its lightweight

and efficient characteristics, contributing to the overall vehicle dynamics and safety. The steering system was carefully designed to ensure proper Ackermann turning and minimum bump steer. The placement of the steering rack behind the front axis was determined to promote optimal steering performance, guided by collaboration with the chassis subteam and expert advice. The traction system was designed with considering factors such as torque distribution, traction control, and a safe braking. The selection of appropriate components and their integration into the car was conducted in a collaborative approach with the corresponding suppliers. Throughout the design and analysis process, adherence to regulations and safety considerations were paramount. Compliance with the FIA safety standards and the specific load cases defined in solar car regulations ensured the structural integrity and reliability of the mechanical subsystems. The successful completion of this vital phase of project demonstrates the team's expertise in designing and analyzing mechanical subsystems for solar-powered vehicles. The outcomes provide valuable insights and contribute to the advancement of sustainable mobility solutions. Further improvements and refinements can be made based on testing and performance evaluations defined in the validation plan. The knowledge gained from this project will serve as a foundation for future solar car developments, inspiring innovation and pushing the boundaries of energy-efficient transportation.

6. Acknowledgments

This research has been conducted as a part of Solar car project which is undertaken by Virginia Tech Solar Car team, 2016-2019.

References

1. Anderson, John D. Fundamentals of Aerodynamics. New York: McGraw-Hill, 2011.
2. Atkinson, Bradford, and Erik Bentley. "Innovations in Electric Vehicle Suspension." SAE Technical Paper 2007-01-0860, 2007.
3. Barker, Darren. "Automotive Suspension Challenges in Racing." Automotive Engineer 45, no. 3 (2012): 32-39.
4. Bennett, Gary, et al. "Solar Car Chassis and Suspension Optimization." Journal of Solar Energy Engineering 132, no. 3 (2010): 031010.
5. Bickler, Donald B. "Steering Mechanisms for Vehicle Control." Vehicle System Dynamics 38, no. 2 (2002): 95-109.
6. Bowers, Joseph, and Linda Rogers. Electric and Solar Vehicle Technology. New York: Elsevier, 2009.
7. Brooke, Peter L. Vehicle Dynamics and Control. London: Imperial College Press, 2014.
8. Brown, David T. "Application of Finite Element Analysis to Racing Suspensions." International Journal of Vehicle Design 54, no. 4 (2012): 285-295.
9. Cameron, Phil, and Jamie Wallace. "Traction Strategies for Solar Vehicles." Solar Energy Materials & Solar Cells 93, no. 9 (2009): 1506-1513.
10. Campbell, John. "Challenges in Lightweight Material Selection for Competition Cars." Materials Performance 47, no. 7 (2008): 56-61.
11. Carpenter, S., and A. Murthy. "Regenerative Braking in Solar Racecars." IEEE Transactions on Vehicular Technology 59, no. 8 (2010): 3937-3944.
12. Choi, Shin, et al. "Suspension Tuning for Efficiency in Solar Challengers." Proceedings of the ASME International Design Engineering Technical Conferences, 2012.

13. Cole, David, and Richard Miller. "Front-End Steering System Innovations." SAE Technical Paper 2006-01-1610, 2006.
14. Cook, Gary. "Mechanical System Integration in Solar Cars." Solar World Challenge Proceedings, 2011: 211-222.
15. D'Amico, Mark, et al. "Energy Management for Solar Car Traction Systems." Applied Energy 95 (2012): 313-320.
16. Dannenberg, Frank. Vehicle Suspension Technology: Dynamics, Control, and Design. Berlin: Springer, 2013.
17. Dudley, Michael, and Xiaofeng Zhang. "Control Methods for Low-Power Steering in Solar Vehicles." IEEE Transactions on Intelligent Transportation Systems 15, no. 1 (2014): 104-112.
18. Darshan Bhavesh Mehta . "Ergonomics of a Custom Made Solar Electric Road Vehicle". International Journal of Engineering Trends and Applications (IJETA) V3(4): Page(29-33) Jul - Aug 2016.
19. Evans, Ted, and Jules Parker. "Chassis Development for Solar Vehicles." International Journal of Automotive Technology 10, no. 2 (2009): 155-161.
20. Feldman, Max. Engineering for Sustainable Transportation. Boston: Academic Press, 2015.
21. Gibson, Tara L., and Nathan Kelly. "Testing of Monocrystalline Solar PV for Vehicle Integration." Journal of Power Sources 195, no. 13 (2010): 3928-3932.
22. Green, C.W. "Race Suspension Fundamentals." Racecar Engineering 21, no. 4 (2011): 44-51.
23. Hildebrand, Joel. "Aerodynamic Considerations in Solar Car Design." Solar Energy 81, no. 5 (2007): 635-642.
24. Howard, R. "Innovative Steering for Low Energy Vehicles." SAE Technical Paper 2008-01-0249, 2008.
25. Lay, Martin G. Automotive Suspension and Steering Systems. London: Routledge, 2009.

Appendices A: kinematic analysis

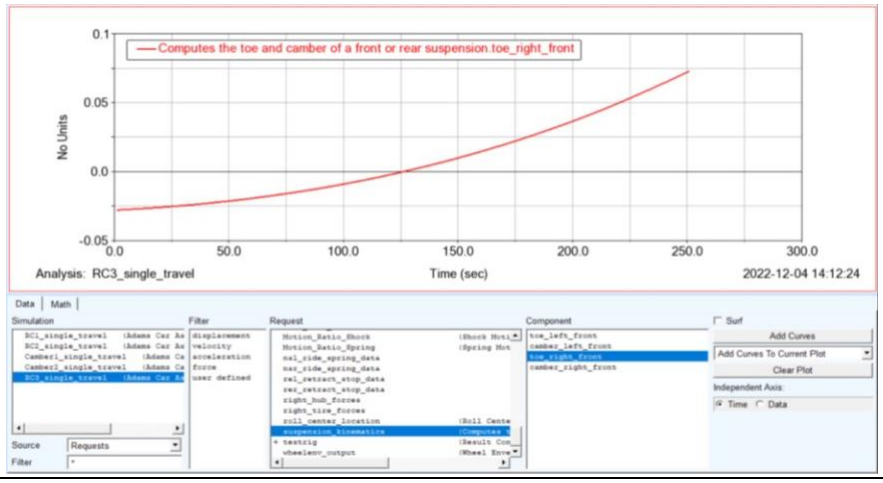

Figure A.1: Bump steer Adams results (100mm vertical tire travel)

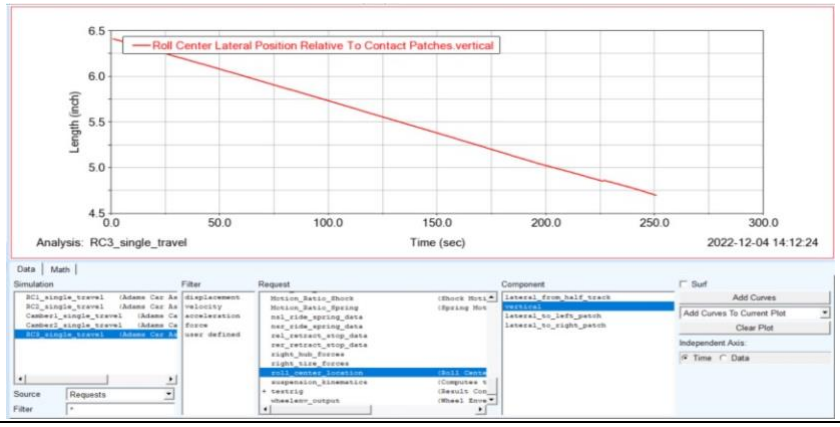

Figure A.2: Roll center height

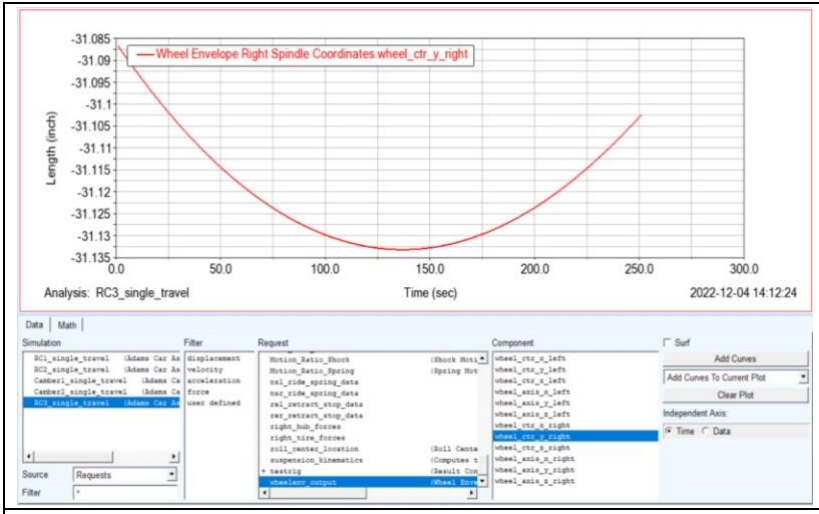

Figure A.3: lateral scrub results (100mm vertical wheel travel)

Appendix B: Ackerman geometry analysis results for steering system

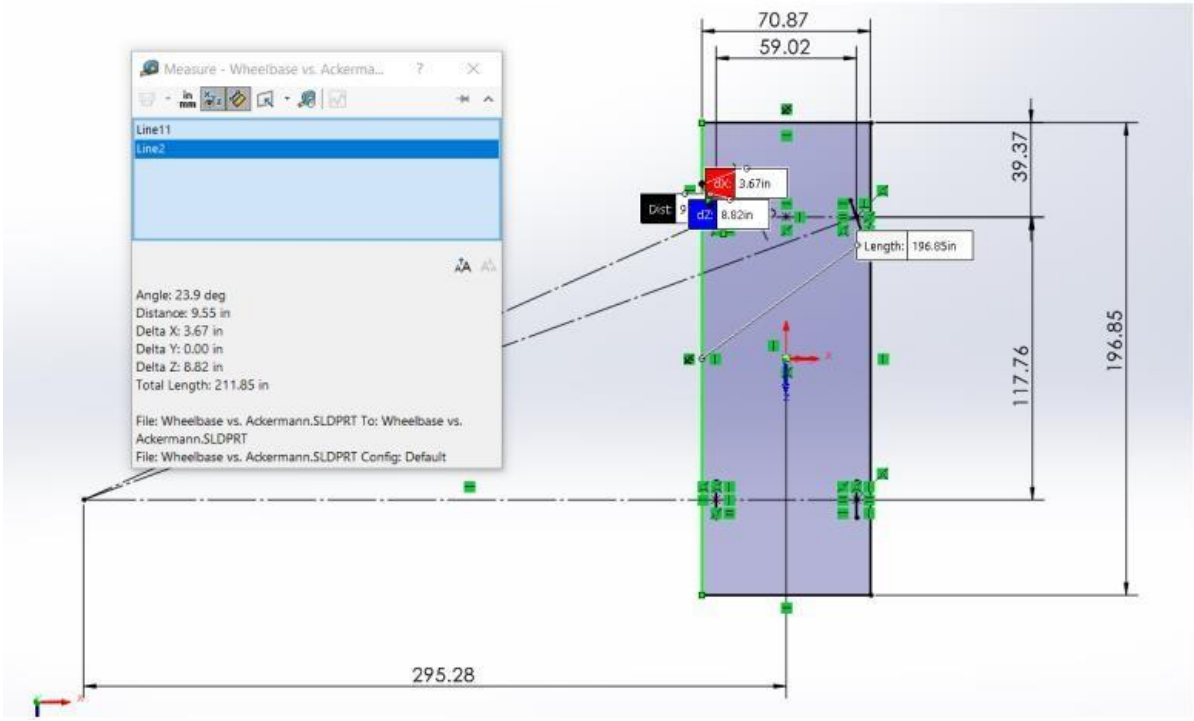
Measure - Wheelbase vs. Ackerma...
Line11
Line2
Angle: 23.9 deg
Distance: 9.55 in
Delta X: 3.67 in
Delta Y: 0.00 in
Delta Z: 8.82 in
Total Length: 211.85 in
File: Wheelbase vs. Ackermann.SLDPRT To: Wheelbase vs. Ackermann.SLDPRT
File: Wheelbase vs. Ackermann.SLDPRT Config: Default
70.87
59.02
39.37
117.76
196.85
295.28
3.67in
8.82in
Length: 196.85in

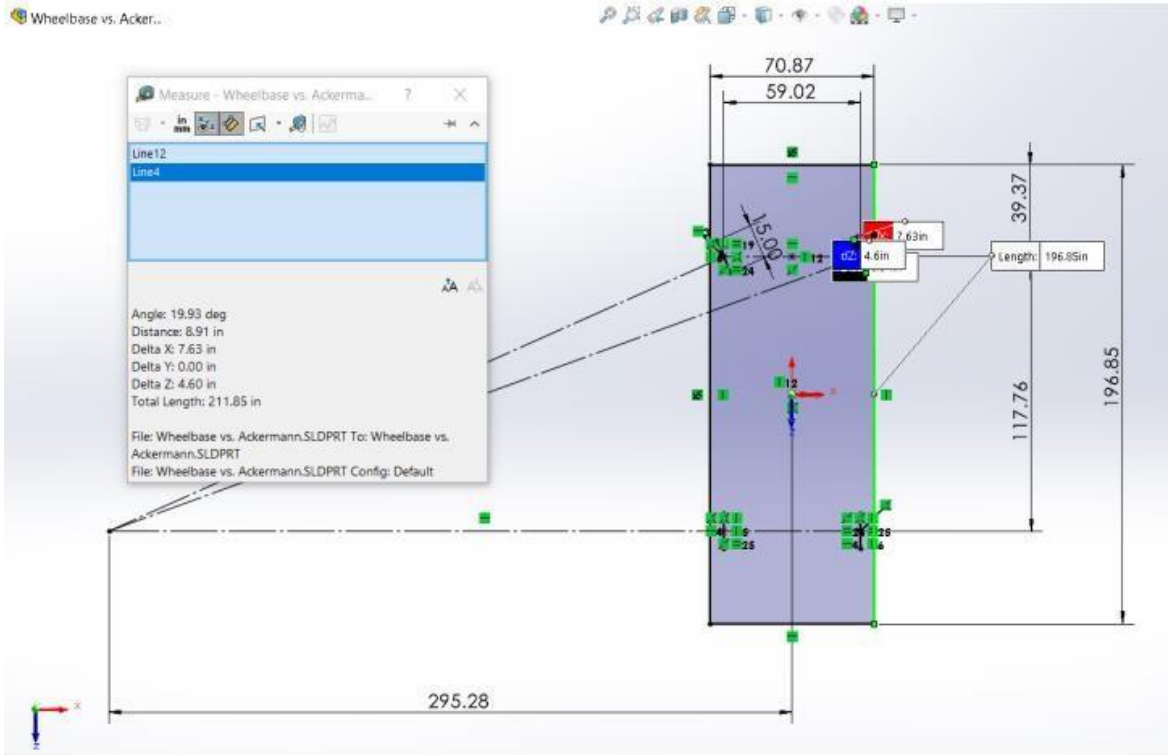
Wheelbase vs. Acker...
Measure - Wheelbase vs. Ackerma...
Line12
Line4
Angle: 19.93 deg
Distance: 8.91 in
Delta X: 7.63 in
Delta Y: 0.00 in
Delta Z: 4.60 in
Total Length: 211.85 in
File: Wheelbase vs. Ackermann.SLDPRT To: Wheelbase vs. Ackermann.SLDPRT
File: Wheelbase vs. Ackermann.SLDPRT Config: Default
70.87
59.02
15.00
39.37
117.76
196.85
295.28
7.63in
4.6in
Length: 196.85in