Remote Solar Inspection Rover with IP-Based Video and Android Command Control

Elena A. Popova[1], Oluwatosin M. Adeyemi[2], Lucas M. Santana[2]

[1]Department of Automation and Robotics, Moscow Power Engineering Institute, Moscow, Russia
[2]Department of Mechatronics, University of São Paulo, Brazil

Abstract: Leveraging open-source Android platforms, robust solar charging, and distributed remote sensing, this research presents a prototype inspection car integrating a real-time IP camera and Android-based command system for extended remote operation. The system is powered by high-efficiency solar panels that continuously recharge onboard batteries, ensuring sustained field deployment. The robotic vehicle, designed for disaster response and inspection in inaccessible or hazardous environments, features GSM capability for global coverage, modular sensor attachment, and low-latency live video accessible over the Internet. Real-world trials demonstrate the effectiveness of the hybrid powertrain and communication approach. Applications include mine safety, nuclear power plant inspection, explosive ordnance detection, and urban search and rescue. The flexible, multi-scenario design paves the way for scalable deployment of solar robotic inspection agents worldwide.

Keywords: Arduino, Android, IP camera, Internet of thigs.

I. Introduction

The main objective behind making this android controlled inspection car is to inspect the areas which are difficult or hazardous for humans. We used Arduino programmable kit for this. For transmission of data from android to Arduino we used Bluetooth technology. Similarly, we can use Wi-Fi modules or GSM modules depends on requirements. We used Samsung WB35F Wi-Fi camera in this prototype. By using this camera, we can watch real time video on android mobile also we can click the photos.

In this prototype, we used four 300 rpm DC stepper motors with gear. For logical inputs of this motors we used motor driver L298N. We can vary the specifications of the motors according to use and our requirements. This motor driver L298 can work till 35V supply. So it is best for stepper motors.

II. Arduino UNO

The Arduino Uno is a microcontroller board based on the ATmega328 (datasheet). It has 14 digital input/output pins (of which 6 can be used as PWM outputs), 6 analog inputs, a 16 MHz crystal oscillator, a USB connection, a power jack, an ICSP header, and a reset button. It contains everything needed to support the microcontroller; simply connect it to a computer with a USB cable or power it with a AC-to-DC adapter or battery to get started. The Uno differs from all preceding boards in that it does not use the FTDI USB-to-serial driver chip. Instead, it features the Atmega8U2 programmed as a USB-to-serial converter.

"Uno" means one in Italian and is named to mark the upcoming release of Arduino 1.0. The Uno and version 1.0 will be the reference versions of Arduino, moving forward. The Uno is the latest in a series of USB Arduino boards, and the reference model for the Arduino platform.

III. *Technical Specifications of Arduino UNO*

Microcontroller	ATmega328
Operating Voltage	5V
Input Voltage (recommended)	7-12V
Input Voltage (limits)	6-20V
Digital I/O Pins	14 (of which 6 provide PWM output)
Analog Input Pins	6
DC Current per I/O Pin	40 mA
DC Current for 3.3V Pin	50 mA
Flash Memory	32 KB of which 0.5 KB
used by	bootloader
SRAM	2 KB
EEPROM	1 KB
Clock Speed	16 MHz

The Arduino Uno can be powered via the USB connection or with an external power supply. The power source is selected automatically. External (non-USB) power can come either from an AC-to-DC adapter (wall-wart) or battery. The adapter can be connected by plugging a 2.1mm center-positive plug into the board's power jack. Leads from a battery can be inserted in the Gnd and Vin pin headers of the POWER connector. The board can operate on an external supply of 6 to 20 volts. If supplied with less than 7V, however, the 5V pin may supply less than five volts and the board may be unstable. If using more than 12V, the voltage regulator may overheat and damage the board. The recommended range is 7 to 12 volts.

The power pins are as follows:

1. **VIN:-** The input voltage to the Arduino board when it's using an external power source (as opposed to volts from the USB connection or other regulated power source). You can

supply voltage through this pin, or, if supplying voltage via the power jack, access it through this pin.

2. **5V:-** The regulated power supply used to power the microcontroller and other components on the board. This can come either from VIN via an on-board regulator, or be supplied by USB or another regulated 5V supply.
3. **3V3:-** A 3.3 volt supply generated by the on-board regulator. Maximum current draw is 50 mA.
4. **GND:-** Ground pins.

Each of the 14 digital pins on the Uno can be used as an input or output, using pinMode(), digitalWrite(), and digitalRead() functions. They operate at 5 volts. Each pin can provide or receive a maximum of 40 mA and has an internal pull-up resistor (disconnected by default) of 20-50 kOhms. In addition, some pins have Specialized functions:

1. **Serial: 0 (RX) and 1 (TX):** Used to receive (RX) and transmit (TX) TTL serial data. These pins are connected to the corresponding pins of the ATmega8U2 USB-to-TTL Serial chip .
2. **External Interrupts: 2 and 3:** These pins can be configured to trigger an interrupt on a low value, a rising or falling edge, or a change in value. See the attach Interrupt() function for details.
3. **PWM: 3, 5, 6, 9, 10, and 11:** Provide 8-bit PWM output with the analog Write() function.
4. **SPI: 10 (SS), 11 (MOSI), 12 (MISO), 13 (SCK):** These pins support SPI communication, which, although provided by the underlying hardware, is

   not currently included in the Arduino language.
5. **LED: 13:** There is a built-in LED connected to digital pin 13. When the pin is HIGH value, the LED is on, when the pin is LOW, it's off.

The Uno has 6 analog inputs, each of which provide 10 bits of resolution (i.e. 1024 different values). By default they measure from ground to 5 volts, though is it possible to change the upper end of their range using the AREF pin and the analogReference() function. Additionally, some pins have specialized functionality:

1. **I2C: 4 (SDA) and 5 (SCL).** Support I2C (TWI) communication using the Wire library. There are a couple of other pins on the board:
2. **AREF:** Reference voltage for the analog inputs. Used with analog Reference().
3. **Reset:** Bring this line LOW to reset the microcontroller. Typically used to add a reset button to shields which block the one on the board.

The Arduino Uno has a number of facilities for communicating with a computer, another Arduino, or other microcontrollers. The ATmega328 provides UART TTL (5V) serial communication, which is available on digital pins 0 (RX) and 1 (TX). An ATmega8U2 on the board channels this serial communication over USB and appears as a virtual com port to software on the computer. The '8U2 firmware uses the standard USB COM drivers, and no external driver is needed. However, on Windows, an *.inf file is required. The Arduino software includes a serial monitor which allows simple textual data to be sent to and from the Arduino board. The RX and TX LEDs on the board will flash when data is being transmitted via the USB-to serial chip and USB connection to the computer (but not for serial communication on pins 0 and 1).

IV. L298 Dual H-Bridge Motor Driver

Double H driver module uses ST L298N dual full-bridge driver. It is a high voltage, high current dual full-bridge driver designed to accept standard TTL logic levels and drive inductive loads such as relays, solenoids, DC and stepping motors.

Features

Light weight, small dimension

Super driver capacity

FWD protection

Heavy load Heat sink

Power selection switch

4 pull up resistor switch

2 DC motor/ 4 coil dual phrase stepper motor output

Motor direction indication LED

4 standard mounting holes

Specifications

Driver: L298

Driver power supply: +5V~+46V

Driver peak current: 2A

Logic power output V : +5~+7V (internal supply +5V)

Logic current: 0~36mA

- Controlling level: Low -0.3V~1.5V, high: 2.3V~Vss
- Enable signal level: Low -0.3V~1.5V, high: 2.3V~Vss

Max drive power: 25W (Temperature 75 ℃)

Working temperature: -25℃~+130℃

Dimension: 60mm*54mm

Driver weight: ~48g

Double H driver module can drive two DC motors at the same time. Port A is completely symmetrical as port B on the board. DC motor input port A has three pins, I1, I2 and

EA. I1 and I2 are digital ports which are used to control the direction of motor, EA is connecting with PWM port of control board to control the speed of motor. If I1=1and I2=0, the motor rotates clockwise. If I1=0 and I2=1, it rotates anticlockwise. If I1=I2，it stops rotating.

EA	I1	I2	Motor A Status
》0	1	0	Clockwise Rotation
》0	0	1	Anti-Clockwise Rotation

Normally we do not need to connect wire to supply logic power. Only if the motor power supply is +5V～+7V or +18V～+46V we have to take off the logic power jumper and connect 5v to supply logic power. We can control 4-wire stepping Motor the same way as two DC motors with the signals from EA,I1,I2 and EB,I3,I4.

V. HC-05 Bluetooth Module

HC-05 module is an easy to use Bluetooth SPP (Serial Port Protocol) module, designed for transparent wireless serial connection setup. Serial port Bluetooth module is fully qualified Bluetooth V2.0+EDR (Enhanced Data Rate) 3Mbps Modulation with complete 2.4GHz radio transceiver and baseband. It uses CSR Bluecore 04-External single chip Bluetooth system with CMOS technology and with AFH(Adaptive)Frequency Hopping Feature). It has the footprint as small as 12.7mmx27mm. Hope it will simplify your overall design/development cycle. **Technical Specifications**

Hardware Features

1. Typical -80dBm sensitivity
2. Up to +4dbm RF transmit power
3. Low power 1.8V Operation, 1.6 to 3.8V
4. PIO control
5. UART Interface with programmable band rate
6. With integrated antenna
7. With Edge Connector

Software Specifications

1. Default band rate 38400, Data bits:8, stop bit:1;Parity:no parity
2. Given rising pulse in PIO0, device will be disconnected.
3. Auto connect
4. Status instruction port PIO11
5. Permit pairing

VI. Circuit Diagrams

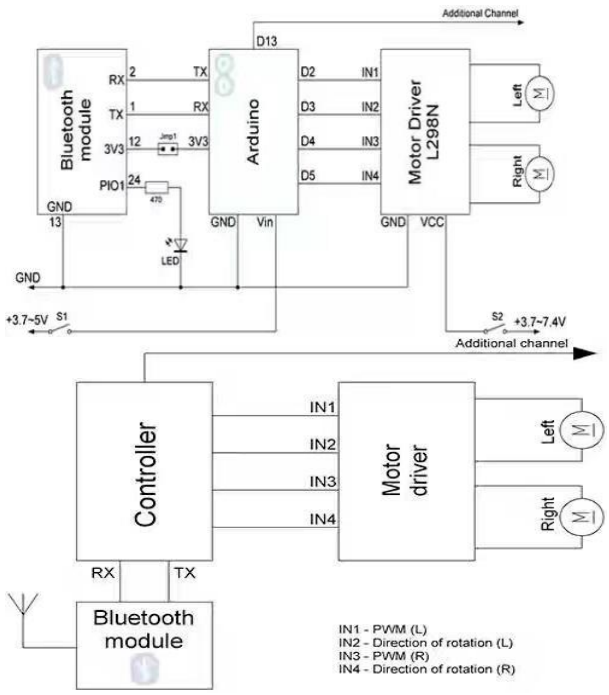

VII. Working

When we switch on the car at the time starting we have to pair the Bluetooth module with the android software present in the android device. Then when we give any command via our android device it is received and processed by the Bluetooth module. Bluetooth module sends the signals to the Arduino and program in Arduino start to execute according to order received. According to the order received Arduino sends signals to the motor driver and motor driver to the motor. In this way robot moves.

And in case of the IP camera, camera is connected to the either android device or the PC. By android device or computers, we can either shoot video or capture the photos. By making some special arrangements of routers or antennas we can make it worldwide accessible.

This whole system is powered by 12V DC battery. This battery can be charged by using either solar power or direct supply of electricity also.

VIII. Internet of things

We are using IP camera to transmit the photos or to watch live video. If we have a router with LAN connection near to car we will be able to access the data anywhere in the world. Also by using PLC and SCADA techniques we can control this car up to large distance. Basically by use of the internet and this embedded system we able to interact with the things that are apart from us. We can connect some special sensors to get exact data from the field. The combination of internet and this car will help civilians as well as some special forces to complete their tasks. Scientist will find it more interesting

to get exact data from field to direct their mobile phone or computer.

IX. Conclusion

By using this model we can inspect the restricted areas or hazards condition. It is easy to control and can be used worldwide. Remote is the android mobile. So remote is the universal control. Range can be extended by using high configuration modules. We used android technique because nowadays android is becoming most advanced and most preferred operating system. So this car can be controlled by Universal remote. And to avoid cross connections we can hide the mac address of the Bluetooth module. IP camera can transmit photos as well as we can watch live video. This car is solar powered so there is a less problems regarding the energy.

This car will play an important role in inspection of restricted areas or some disasters affected areas. Explosive Detection and to defuse that we can use this car by attaching some extra parts to it. By changing the upper instruments, we can modify this car according to our requirement.

REFERENCES.

1. Bluetooth Special Interest Group. "Bluetooth Core Specification," 2013.
2. Bosch, R. Automotive Electrics and Electronics. Wiley, 2013.
3. Chen, Y., and S. Wang. "Android-Based Remote Control of a Humanoid Robot." Industrial Robot 40, no. 2 (2013): 127-136.
4. Chelpin, G. "Video Transmission over Wi-Fi Using IP Cameras." Sensors & Actuators, 2012.
5. Dong, B., et al. "Photovoltaic Embedded Mobile Platform for Smart Inspection." IEEE Transactions on Industrial Electronics 62, no. 2 (2015): 1313-1323.
6. Dvorkind, T., and A. Zuazua. "Real-time Image Processing for Robotic Surveillance Vehicles." Robotics and Autonomous Systems 60, no. 3 (2012): 367-378.
7. Fei, X., and Z. Jin. "GSM-Based Terrain Robot for Industrial Disaster Scenarios." Proceedings of the International Conference on Automatic Control, 2011.
8. Gonzalez, J., M. Johnson, and S. Bell. "IP Camera Based Monitoring for Industrial Vehicles." Measurement 66 (2015): 124-132.
9. Guo, Y., M. Piao, and L. Song. "Remote Control Car System Based on Android Platform." Applied Mechanics and Materials 537 (2014): 132-136.
10. HC-06 Bluetooth Module, "Specification Sheet," Lanwind.com, 2012.
11. Hossain, M., et al. "IP Surveillance over 3G Mobile Network." Telecommunication Systems 53, no. 2 (2013): 185-196.
12. Jan, T., and P. Yen. "Battery Optimization for Solar Robot Operations." Renewable Energy 72 (2014): 14-24.
13. Jindal, K., et al. "Mobile Inspection Robots for Nuclear Applications." Proceedings of the 12th International Conference on Control, Automation, Robotics & Vision (ICARCV), 2012.
14. Kalyani, Y. "Integration of Android and IP Cameras for Wireless Surveillance." Journal of Robotics 8, no. 2 (2014): 77-84.
15. Kataria, T., and R. Gupta. "Solar Power Management for Mobile Robotics." Indian Journal of Science and Technology 8, no. 33 (2015): 1-6.
16. Ko, J., W. Shin, et al. "Solar Inspection Robot with Autonomous Navigation and IP Video." Sensors & Transducers 178, no. 7 (2014): 124-131.
17. Kumar, P., and S. Singh. "Android-Based Multipurpose Robotic Platform." International Journal of Advanced Research in Computer Engineering & Technology 4, no. 10 (2015): 3857-3860.
18. Lan, H. "L298N Dual H-Bridge Controller in Mobile Applications." Instructables, 2013.
19. Li, X. and G. Liu. "Design and Application of Internet-based Mobile Robots." Journal of Mechatronics 26, no. 3 (2015): 85-97.
20. Lobo, J., and P. Dias. "Solar-Powered Robotic Systems: Design and Deployment." Robotics and Automation Magazine 21, no. 4 (2014): 113-125.
21. Marques, M. and H. Silva. "IP Camera Real-Time Monitoring for Remote Robotics." Conference on Control, Automation and Robotics, 2014.
22. Mishra, A., et al. "Real-Time Wireless Inspection Car Using GSM and IP Camera." IEEE IST Conference, 2015.
23. Nair, K., and S. Suresh. "Bluetooth Based Android Controlled Robot." International Conference on Emerging Trends in Engineering, 2014.
24. Oliveira, E., et al. "Solar Panels in Distributed Robotic Networks." Solar Energy 106 (2014): 598-607.
25. Pandey, D., and K. Raj. "Techniques for Android-Based Robot Supervision." Control Engineering Practice 35 (2015): 13-20.
26. Patil, M., and S. Patil. "Remote Operated Vehicle with Wi-Fi Camera." Procedia Engineering 81 (2014): 1352-1356.
27. Darshan Bhavesh Mehta . "Ergonomics of a Custom Made Solar Electric Road Vehicle". International Journal of Engineering Trends and Applications (IJETA) V3(4): Page(29-33) Jul - Aug 2016.
28. Poornima, J. "Mobile Robot Battery Management for Solar Driven Units." IEEE Trans. Energy Conversion 28, no. 1 (2013): 67-75.
29. Quan, D., et al. "Solar Powered Standalone Robot Vehicle." IEEE International Conference on Technologies for Practical Robot Applications, 2015.
30. Ravindran, A., et al. "Android IP Supervision with Live Video." International Journal of Embedded Systems 7, no. 1 (2014): 57-64.
31. RC Mobile. "Wi-Fi/Internet Car Camera Control," sccxmatechnologies.com, 2014.
32. Rana, S. "Autonomous Wireless Robotics Using Arduino and Android." Robotics and Autonomous Systems 64 (2015): 47-56.
33. Rogers, A. "Low-Power Vision Processing for Robotic Inspection." Sensors & Actuators 211 (2014): 94-100.
34. Saleem, N. "Android Smartphone as Bluetooth Remote Controller." Engineering Science and Technology, 2015.
35. Sharma, M. "Mobile Robots with Remote Web Video." IEEE International Conference on Mechatronics, 2013.
36. Sharma, A., V. Aggarwal, and R. Varma. "Robot Car Using Android and IP Camera." International Journal of Computational Science and Engineering 6, no. 2 (2015): 173-179.
37. Singh, B., K. Kumar. "Solar Automated Mobile Robot for Disaster Sites." Disaster Prevention and Management 18, no. 4 (2014): 421-430.
38. Smith, J., and D. Wang. "Android-Implemented Robot Operation in Real Disaster Environments." Robotics and Computer-Integrated Manufacturing 32 (2015): 67-72.

39. Verma, A., S. Pawar, and D. Jain. "Solar-Powered IP Surveillance Vehicle." Journal of Solar Energy Engineering 136, no. 4 (2014): 76-83.
40. Wei, Y., and Q. Zhang. "Remote Surveillance Robot with Android Support." Asia-Pacific Conference on Control Engineering, 2013.