Sanderman Publishing House

Electrical and Computer Engineering Studies
Volume 2, Issue 2, No. 2
Received 26 February 2017; Accepted 22 April 2017
Published online 29 April 2017

Integration of Regenerative Braking, Wind, and Solar Generation in Small-Scale Electric Vehicles

Arjun Patel[1], Selina K. Wu[2], Zahra Rahmani[3], David O. Moyo[4], Natalia Ivanovna Petrova[5]
[1] Department of Mechanical Engineering, National Institute of Technology, Surat, India
[2] Department of Electrical Engineering, University of Alberta, Edmonton, Canada
[3] Faculty of Engineering, Shahid Beheshti University, Tehran, Iran
[4] School of Physics and Renewable Energy, University of Zimbabwe, Harare, Zimbabwe
[5] Department of Automotive Technology, Moscow Polytechnic University, Moscow, Russia

Abstract. This study presents the design and assessment of a solar-electric model vehicle equipped with a novel hybrid brake-energy regeneration system. The rapid escalation of global energy concerns and environmental imperatives has renewed interest in alternative vehicle propulsion strategies. Here, a scaled electric car chassis is engineered to incorporate not just conventional regenerative braking, but also a wind-assisted turbine generator aligned with a movable damper system, harvesting airflow during braking cycles. The intended benefit is a marked extension in operational range, reduced primary battery load, and improved system efficiency. The prototype further integrates semi-flexible photovoltaic cells for continuous, solar-based battery supplementation. Experimental characterization reveals that wind turbine incorporation contributes measurable gains in net motor run time and complements energy flows from the solar subsystem. Together, these strategies—tested under controlled driving cycles and variable ambient lighting—demonstrate the feasibility and performance impacts of multi-source energy recovery in small-scale electric vehicles. The resulting insights provide direction for the development of advanced hybrid braking and charging architectures in future urban transport platforms.

Keywords. Electric car, generator braking system, generator, photovoltaic.

1. Introduction

The electric vehicle (EV) is not a new invention. The early years of production and construction of electric cars go back to the year 1900 AD, at that time due to the problems that electric motors had on the one hand and on the other hand the new discovery of oil and its abundant production in the dramatic progress of internal combustion engines, the construction of these cars was considered. They did not date. But with the emergence of world wars and conflicts over oil, this material became more valuable and more attention was attracted to electric cars, and that was that since 1990, the production of electric cars was more seriously considered. In electric cars the power supply system includes an electric motor, controller, batteries and its charger. The electric drive system of the electric car has the duty of converting the direct current produced by the battery into mechanical energy, which means the drive system of all the parts that convert the direct current of the batteries into power. traction and torque are necessary for the wheels to move. One of the most important features of an electric car is the range and driving power of acceleration, speed, incline, and loading and flexibility, charging time and the high price of batteries in most of the existing electric cars. Due to the progress of the day In addition to the automobile industry and the mass production of internal combustion vehicles, which causes various problems such as air pollution, as well as the limited and expensive reserves of fossil fuel, research and design on electric vehicles is one of the main programs of the automobile industry, especially in developed countries. It has become European and American. In Iran, research has been done in this field in the last few years. The most important features of electric cars are: range and power of movement, acceleration, speed, incline and loading, flexibility and charging time, and the high price of batteries in most electric cars. The available driving set consists of the regulator member controller, electric motor, gear box with reducing ratio on the axles and distribution box for two or four wheels, other solutions are also used, for example, two motors with or without a gear box. gear box. The stimulus set must meet many and varied demands, which are used as criteria for evaluating and comparing different solutions, for example, some of the most important criteria are: easy to use, high efficiency, low cost, high reliability, lack of need to service and maintenance, light

weight, small building volume. It should be noted that all these criteria cannot be gathered well in one stimulus set, so that generally high efficiency is opposite to low cost.

2. Research Background

Taghipour et al. [1] studied "Risk analysis in the management of urban construction projects from the perspective of the employer and the contractor."

Mahboobi et al. [2] discussed "Assessing ergonomic risk factors using combined data envelopment analysis and conventional methods for an auto parts manufacturer", occupational injuries are currently a major contributor to job loss around the world.

Taghipour et al. [3] studied "The impact of ICT on knowledge sharing obstacles in knowledge management process (including case-study)."

Mirzaie et al. [4] studied "The relationship between social bearing capacities with conflict as a result, in the perception of the visiting historical sites."

Alamdar khoolaki et al. [5] studied "Effect of integrated marketing communication on brand value with the role of agencys reputation (including case study)."

Taghipouret et al. [6] studied "A survey of BPL technology and feasibility of its application in Iran (Gilan Province)."

Seddigh Marvasti et al. [7] studied "Assessing the effect of the FRP system on compressive and shear bending strength of concrete elements."

Jalili et al. [8] studied "Comparative study of Khaje Rashid al-Din views on Rab-e Rashidi Islamic Utopia and Kevin Lynch ideas."

Taghipour et al. [9] studied "Insurance performance evaluation using BSC-AHP combined technique."

Rezvani et al. [10] discussed "The design of high-rise building with ecological approach in Iran (Alborz Province)."

Taghipour et al. [11] studied "The identification and prioritization of effective indices on optimal implementation of customer relationship management using TOPSIS, AHP methods."

Taghipour and Yazdi [12] studied "Seismic analysis (non-linear static analysis (pushover) and nonlinear dynamic) on Cable-Stayed Bridge."

Taghipour et al. [13] studied "Investigating the relationship between competitive strategies and corporates performance (case study: Parsian Banks of Tehran)."

Taghipour and Moosavi [14] studied "A look at gas turbine vibration condition monitoring in region 3 of gas transmission operation."

Taghipour and Vaezi [15] studied "Safe power outlet."

Azarian and Taghipour [16] studied "The impact of implementing inclusive quality management on organizational trust (case study: educatin)."

Mohammadi et al. [17] studied "Investigating the role and impact of using ICT tools on evaluating the performance of service organizations."

Abdi Hevelayi et al. [18] studied "Predicting entrepreneurial marketing through strategic planning (including case study)."

Khorasani and Taghipour. [19] studied "The location of industrial complex using combined model of fuzzy multiple criteria decision making (including case study)."

Taghipour et al. [20] studied "Risk assessment and analysis of the state DAM construction projects using FMEA technique."

Hoseinpour et al. [21] studied "The problem solving of bi-objective hybrid production with the possibility of production outsourcing through Imperialist Algorithm, NSGA-II, GAPSO Hybid Algorithms."

Taghipour and Ahmadi Sarchoghaei.[22] studied "Evalation of tourist attractions in Bourujerd County with emphasis on development of new markets by using Topsis Model."

Taghipour et al. [23] studied "The impact of managerial factors on increasing the productivity of low-level employees (including case study)."

Baghipour saramiet et al. [24] studied "Modeling of nurses' shift work schedules according to ergonomics: a case study in Imam Sajjad (As) Hospital of Ramsar."

Molavi & Taghipour [25] studied "A survey on electrical cars advantages."

Taghipour.[26] studied "A review of the sustainability indicators' application in vehicle routing problem. "

Moosavi and Taghipour.[27] studied "Turbine vibration condition monitoring in region 3. "

Taghipour et al.[28] studied " Assessment of the Relationship Between Knowledge Management Implementation and Managers Skills (Case Study: Reezmoj System Company in Iran). "

Taghipour et al.[29] studied "Evaluation of the effective variables of the value engineering in services. "

Taghipour et al.[30] studied "Project Planning and Control System in Multi-project Organizations under Fuzzy Data Approach Considering Resource Constraints(Case Study: Wind Tunnel Construction Project). "

Taghipour et al.[31], studied "Application of Cloud Computing in System Management in Order to Control the Process. "

Taghipour et al. [32] studied "Identification and modeling of radio wave propagation channel in industrial environments. "

Taghipour et al. [33] studied "Implementation of software-efficient DES Algorithm. "

Sedaghat manesh & Taghipour.[34] studied "Reduction of losses and capacity release of distribution system by distributed production systems of combined heat and power by graph methods. "

Taghipour et al.[35] studied "A survey of BPL technology and feasibility of its application in Iran (Gilan Province). "

3. Solar Cars

3.1. Introduction

Solar cars take a small amount of energy by solar cells and transfer it to the engine and then it is transferred from the engine to the wheels. The solar cells used are mostly single crystal silicon.

3.2. Solar Cells

Even on a clear sunny day, only 10% of the sunlight reaches the ground. On the surface of the earth, the heat flux, when it shines completely vertically, is 21 kw/m2. Solar cells are electronic components and are made of semiconductors. A solar cell consists of a thin plate of negative type, n-type, and a plate with a thicker thickness of positive type, p-type, formed in the part where the negative plate is placed on the positive plate. When a photon reaches the cell, the energy is transferred to the semiconductor crystal electrons, and when it is placed in a circuit, current is established.

3.3. Solar Cell Production Technologies

There is a thin metal sheet on the solar cells, and this metal contact is called Screen printed, when the solar cells are exposed to light, a shadow falls on a part of the cells and the efficiency is about 15%, and also textured.) making the surface reduces the recovery loss of solar cells.

3.4. The Working Mechanism of Solar Cells

The solar cells seen on calculators and satellites are photovoltaic or modular cells (a number of solar cells that are connected to each other and placed inside a frame) and the literal meaning of photovoltaic (photo=light and voltaic=electricity)) that converts sunlight into electricity. In addition to solar cars, solar cells are used more in space sciences.

3.5. How PV Photovoltaic Solar Cells Work

These cells are made of semiconductor materials. Silicon is an element that is widely used in the production of solar cells. When light hits the surface of solar cells, a certain percentage is absorbed, which depends on various factors such as the absorption and emission coefficients of the surface. This means that the absorbed light energy is transferred to the semiconductor, this energy enters the electrons and causes them to move and flow. Also, all solar cells have an electric field or even more than one, which causes Let the electrons be released and move in a specific direction.

Now, to understand more, we examine the structure of a single crystal silicon solar cell that is widely used in solar cars:

3.6. Silicon in Solar Cells

Silicon (Si) is an element that has its own chemical properties, especially in its crystalline form, the silicon atom has 14 electrons, which are placed in three main layers, the first layer has a maximum capacity of two electrons, the second layer has a maximum capacity of 8 electrons, and the third layer It also has 4 electrons and in fact it has half of its maximum capacity. Silicon is always looking for a way to fill its last layer with electrons and complete its capacity and thus reach a completely stable state (that is, the third layer has 8 electrons). In order to do this, silicon must have four atoms on the side of its electrons in order to reach the desired crystal structure. Pure silicon is a weak semiconductor of electricity because none of its electrons are like the electrons of copper (which is a very good conductor). It is an electric current and it has many free electrons (it is not free to move around it and the electrons are locked in the silicon crystal structure. The cells used in solar cars are not pure silicon and it also has some impurities, which are the crystal structure and atomic arrangement. It is always thought that the presence of impurities is not desirable, but here it must be said that

without these impurities, it is not possible for solar cells to work. Consider a silicon with one phosphorus atom, of course, in the structure, there may be a million If there is silicon with one phosphorus atom, phosphorus has 5 electrons in the outer layer of its chemical structure, not 4 electrons. Phosphorus forms a bond with four silicon atoms around it, and one electron out of 5 electrons is the only one that does not form a bond, but due to the attraction of the nucleus, this electron remains in its orbit. When the energy of the sun, for example, in the type of heat that reaches pure silicon causes a small number of electrons to leave their orbits and be free, and as a result of this release, an empty space is created. these electrons are called free carriers and can generate electric current. In pure silicon, the number of these electrons is very small and the usefulness There is not much. Silicon with phosphorus impurity has a different story. Experience has shown that very little energy is needed to release the only electron of phosphorus that did not participate in the bond, because considering that it did not participate in the bond, it is attracted by the nucleus of other atoms. That force does not enter and is only in the captivity of its nucleus. According to this explanation, the energy of the sun reaching the cell causes the release of many of these electrons, which is much more compared to its pure type. The process of adding phosphorus to pure silicon is doping. It is called (doping) and when phosphorus is added to it, the obtained silicon will be negative type (N-type), which is also due to many free electrons. The negative type of doped silicon is a better conductor than pure silicon. Berene becomes impure, which has only three electrons in its outer layer instead of four electrons, and silicon forms the positive type (P-type). Instead of having free electrons, this type of silicon has spaces to accommodate electrons, so it carries a positive charge. and move around it, just like what electrons do. In addition to the above explanation, it should be said that Berene, having three electrons, lacks electrons to form a bond with four atoms around it. The interesting part starts when we put the positive type silicon together with the negative type silicon, remember that every photovoltaic cell has at least one electric field without which the cell cannot work and this is possible when Positive and negative silicon are put together and are in contact with each other, free electrons are looking for a space to sit, and these electrons, which have started to move from the negative side, can find this space in the positive side, and as a result, a fast current It is created to fill these empty spaces. Before these silicons were all electrically neutral, and the total number of electrons of the atom and free electrons were in balance with the protons of the nucleus, the lost electrons (empty spaces) with the lost protons. given in Bern, they reach the equilibrium state and this phenomenon occurs when a connection between the negative type and the positive type to form iodine has been lost. At this stage, neutrality has disappeared. The question that is raised here is that all electrons are empty spaces. do they fill If this is the case, the arrangement of the holes will no longer be useful, right in the contact area of the two types, they have mixed together and created a barrier, which has made the flow of electrons from the negative part to the positive part more and more difficult, and eventually the electrical balance will come. reach and we have an electric field separating two parts. This electric field acts like a diode and causes the movement of electrons from the positive side to the negative side, but it is not possible to move from the negative side to the positive side. It is impossible to go up to the positive side, so we have an electric field that acts like a diode and allows movement in one direction.

3.7. The Impact of Light on Solar Cells

When the light, which consists of photons, reaches the solar cells, each photon with enough energy can release an electron and create a hole. If this phenomenon is close enough to the electric field, the field will move the electrons to the negative side and holes. sends the electrons to the positive side and this state will upset the electrical balance more and if we have an external current line, the electrons will flow in the direction of the current (to the positive side) to unite, and this current is also caused by the field. It is electric and they can do work for us in this transfer.

3.8. Anti-reflective AR Coating

It is used to reduce light reflection from the surface and this AR coating brings 1 to 2% increase in efficiency, like its use in solar cells. Texharding aims to increase productivity by 3%, it is difficult to keep it clean and dust and water can penetrate into the area.

3.9. Designing the Area of Solar Cells, Manufacturing It for A Smaller Model

The body is the first design factor and the solar cell area is also placed on the body. The first idea to build the infrastructure of the solar area (that is, the place where the solar cells are placed) is to use popsicles. It is widely accessible and has a lot of flexibility, and it should be a fixed place for supporting solar cells.

3.10. The Electrical Condition of the Solar Panel Area

There are two methods for arranging solar cells next to each other: series method and parallel method. Choosing the type of series involves stacking the cells together in a small space. We have 12 solar cells and we want to use 10 of them. Each solar cell is 2 x 1 inch and has a voltage of 0.2 volts and a current of 400 milliamps. If we put N cells together in series, our total voltage will be N×V, where V is the voltage of each cell, i.e. 0.2 volts, and the total current is equal to the current of one cell, i.e. 400 milliamps. It is possible to use a combination of two types, i.e. series and parallel, because in the series model, the total voltage is limited by the output voltage of the lowest generating cell. If it fails, the overall voltage will also be reduced. In the series model, the cells are in contact with each other by means of wires that are in

series from one cell to another, and in this way, the upper part of one cell and the lower part of another cell are soldered, and this continues until the last cell. The last cell is connected to the motor with a wire and the motor takes all the power produced by 10 cells.

3.11. The Results Obtained for A Solar Area Sample

This area consists of 432 solar cells that cover an area of 8, and each cell must be completely clean and healthy before being installed. To ensure their proper operation, special techniques are used to install them on a panel. and these panels are covered with a silicone polymer that protects the cell and is also waterproof, and these cells can produce about 960 watts of power, almost the same power as a home hair dryer.

4. Design and Implementation of Regenerative Braking System in Electric Vehicle

The mechanical system of a solar car is usually simple in concept, but they are designed to reduce friction and weight while being able to withstand various road conditions in terms of strength. Light metals such as titanium and composites are usually used because of their high strength-to-weight ratio. and they are suitable in terms of productivity, they are used as a mechanical system consisting of suspension system, brakes, traction system, wheels, tires. Solar cars usually have three or four wheels, which according to the rules, at least three wheels are required) The usual type of three wheels has two wheels in the front and one wheel in the back, which is usually the rear wheel is the driving wheel. Four-wheel cars are sometimes like cars They are normal, one of the rear wheels is behind the driving wheel. The other four wheels have two wheels close to each other in the back, very similar to the three-wheel type. A wide variety of suspension systems have been used in solar cars, and part of this type of variety is due to the variety in the body and chassis, which the suspension system should be made according to.

The most common type of suspension system that is used in the front of the car is the double A arm suspension system (Double A Arm), which is similar to its counterpart in normal cars, and also the trailing arm suspension, which is effective in motorcycles. It is widely used in the rear of solar cars. The suspension system is designed to move freely and have high efficiency, and the design should be adjustable and work very well. Safety is the most important issue, that's why solar cars must follow strict braking standards, and every solar car needs two independent braking systems. The wonderful thing that they have is that some of them use mechanical and electric brakes together and some of them use hydraulic brakes to maximize the efficiency of brakes. It is formed between the brake pads and the keyboard. The propulsion system inside the solar car is very diverse, like the suspension system, but they can do any desired design. The most important parameter for the propulsion system is its efficient and correct operation. It causes more friction between the tires and the ground and wastes energy. In the past, bicycle wheels and tires were usually used in solar cars, and that was because of their low weight and very low friction. These wheels and tires were usually subjected to heavy loads when the weight of a solar car was placed on them. It had a great effect on the performance and safety of the car. The legislative committee does not allow excessive loading on tires and wheels. Fortunately, the use of tires and wheels that have good performance and friction, less weight and more safety have been allowed. Now, in this section, the design and implementation of the regenerative braking system in the L969 model electric vehicle has been discussed. By installing a wind turbine on the car, during braking and by directing the passing air flow to the turbine by an electric damper, the generator starts moving and produces electricity. The generated electricity of the generator is converted from AC to DC by a diode bridge circuit and after stabilization is checked by a voltage regulation module to charge the batteries.

4.1. Introduction

In this section, the design and implementation of the regenerative braking system in the L969 model electric vehicle has been discussed. By installing a wind turbine on the car, during braking and by directing the passing air flow to the turbine by an electric damper, the generator moves and produces electricity. The generated electricity of the generator is converted from AC to DC by a diode bridge circuit and after stabilization is checked by a voltage regulation module to charge the batteries.

4.2. Technical Details of The Car

The image of the car used in this research is given below. This car has a 390-brush engine and its maximum speed is 40 km/h. The final range of the controller is 200 meters and a 7.4 V, 1500 mAh lithium battery is used in it. According to the information in its catalog, it takes 2 hours to charge the battery of this car by the relevant charger, which is completed in 20 minutes at the maximum speed of the car.

Figure 1. Image of the car used in this research

4.3. LM2596 Step-Down, Step-Up Module

This module is used to stabilize the output voltage of solar panels in a certain range.

The LM2596 voltage reducer module converts DC input voltage to DC output that can be changed by the multitrain placed on it - input voltage V3 to V35 and output voltage V1.23 to V30 - voltage drop of at least 2 volts - 92% efficiency - has the special input connection point is 2 negative IN and positive IN and negative and positive OUT output - DC-DC voltage converter with a maximum current intensity of 3 amperes. The data sheet for the LM2596 module is given below:

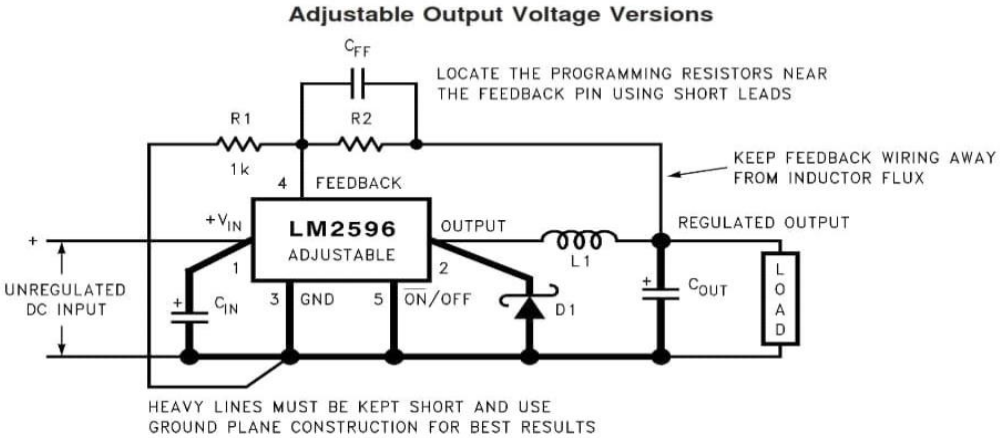

Figure 2. LM2596 buck-boost module

Absolute Maximum Ratings (Note 1)

If Military/Aerospace specified devices are required, please contact the National Semiconductor Sales Office/ Distributors for availability and specifications.

Maximum Supply Voltage	45V
$\overline{ON}$ /OFF Pin Input Voltage	$-0.3 \leq V \leq +25V$
Feedback Pin Voltage	$-0.3 \leq V \leq +25V$
Output Voltage to Ground (Steady State)	−1V
Power Dissipation	Internally limited
Storage Temperature Range	−65˚C to +150˚C
ESD Susceptibility	
Human Body Model (Note 2)	2 kV
Lead Temperature	
S Package	
Vapor Phase (60 sec.)	+215˚C
Infrared (10 sec.)	+245˚C
T Package (Soldering, 10 sec.)	+260˚C
Maximum Junction Temperature	+150˚C

Operating Conditions

Temperature Range	$-40˚C \leq T_J \leq +125˚C$
Supply Voltage	4.5V to 40V

LM2596-3.3 Electrical Characteristics

Specifications with standard type face are for T_J = 25˚C, and those with **boldface type** apply over **full Operating Temperature Range**

Symbol	Parameter	Conditions	LM2596-3.3 Typ (Note 3)	LM2596-3.3 Limit (Note 4)	Units (Limits)
SYSTEM PARAMETERS (Note 5) Test Circuit Figure 1					
V_{OUT}	Output Voltage	$4.75V \leq V_{IN} \leq 40V$, $0.2A \leq I_{LOAD} \leq 3A$	3.3	3.168/**3.135** 3.432/**3.465**	V V(min) V(max)
η	Efficiency	V_{IN} = 12V, I_{LOAD} = 3A	73		%

LM2596-5.0 Electrical Characteristics

Specifications with standard type face are for T_J = 25˚C, and those with **boldface type** apply over **full Operating Temperature Range**

Symbol	Parameter	Conditions	LM2596-5.0 Typ (Note 3)	LM2596-5.0 Limit (Note 4)	Units (Limits)
SYSTEM PARAMETERS (Note 5) Test Circuit Figure 1					
V_{OUT}	Output Voltage	$7V \leq V_{IN} \leq 40V$, $0.2A \leq I_{LOAD} \leq 3A$	5.0	4.800/**4.750** 5.200/**5.250**	V V(min) V(max)
η	Efficiency	V_{IN} = 12V, I_{LOAD} = 3A	80		%

LM2596-12 Electrical Characteristics

Specifications with standard type face are for T_J = 25˚C, and those with **boldface type** apply over **full Operating Temperature Range**

Symbol	Parameter	Conditions	LM2596-12 Typ (Note 3)	LM2596-12 Limit (Note 4)	Units (Limits)
SYSTEM PARAMETERS (Note 5) Test Circuit Figure 1					
V_{OUT}	Output Voltage	$15V \leq V_{IN} \leq 40V$, $0.2A \leq I_{LOAD} \leq 3A$	12.0	11.52/**11.40** 12.48/**12.60**	V V(min) V(max)
η	Efficiency	V_{IN} = 25V, I_{LOAD} = 3A	90		%

Figure 3. Data sheet related to LM2596 module

LM2596

LM2596-ADJ
Electrical Characteristics

*Specifications with standard type face are for T_J = 25˚C, and those with **boldface type** apply over **full Operating Temperature Range***

Symbol	Parameter	Conditions	LM2596-ADJ Typ (Note 3)	LM2596-ADJ Limit (Note 4)	Units (Limits)
SYSTEM PARAMETERS (Note 5) Test Circuit *Figure 1*					
V_{FB}	Feedback Voltage	$4.5V \le V_{IN} \le 40V$, $0.2A \le I_{LOAD} \le 3A$ V_{OUT} programmed for 3V. Circuit of *Figure 1*	1.230	 1.193/**1.180** 1.267/**1.280**	V V(min) V(max)
η	Efficiency	V_{IN} = 12V, V_{OUT} = 3V, I_{LOAD} = 3A	73		%

All Output Voltage Versions
Electrical Characteristics

*Specifications with standard type face are for T_J = 25˚C, and those with **boldface type** apply over **full Operating Temperature Range**. Unless otherwise specified, V_{IN} = 12V for the 3.3V, 5V, and Adjustable version and V_{IN} = 24V for the 12V version. I_{LOAD} = 500 mA*

Symbol	Parameter	Conditions	LM2596-XX Typ (Note 3)	LM2596-XX Limit (Note 4)	Units (Limits)
DEVICE PARAMETERS					
I_b	Feedback Bias Current	Adjustable Version Only, V_{FB} = 1.3V	10	 50/**100**	nA nA (max)
f_O	Oscillator Frequency	(Note 6)	150	 127/**110** 173/**173**	kHz kHz(min) kHz(max)
V_{SAT}	Saturation Voltage	I_{OUT} = 3A (Notes 7, 8)	1.16	 1.4/**1.5**	V V(max)
DC	Max Duty Cycle (ON) Min Duty Cycle (OFF)	(Note 8) (Note 9)	100 0		%
I_{CL}	Current Limit	Peak Current (Notes 7, 8)	4.5	 3.6/**3.4** 6.9/**7.5**	A A(min) A(max)
I_L	Output Leakage Current	Output = 0V (Notes 7, 9)		50	μA(max)
		Output = −1V (Note 10)	2	 30	mA mA(max)
I_Q	Quiescent Current	(Note 9)	5	 10	mA mA(max)
I_{STBY}	Standby Quiescent Current	ON/OFF pin = 5V (OFF) (Note 10)	80	 200/**250**	μA μA(max)
θ_{JC} θ_{JA} θ_{JA} θ_{JA} θ_{JA}	Thermal Resistance	TO-220 or TO-263 Package, Junction to Case TO-220 Package, Junction to Ambient (Note 11) TO-263 Package, Junction to Ambient (Note 12) TO-263 Package, Junction to Ambient (Note 13) TO-263 Package, Junction to Ambient (Note 14)	2 50 50 30 20		˚C/W ˚C/W ˚C/W ˚C/W ˚C/W
ON/OFF CONTROL Test Circuit *Figure 1*					
V_{IH} V_{IL}	$\overline{ON}$ /OFF Pin Logic Input Threshold Voltage	 Low (Regulator ON) High (Regulator OFF)	1.3	 **0.6** **2.0**	V V(max) V(min)

Figure 4. Data sheet related to LM2596 module

Figure 5. Solar panel 4 volts, 200 mA, dimensions: 85 x 60 mm

4.4. Solar Panel

A solar cell or photovoltaic cell is a solid-state electronic component that converts a percentage of sunlight energy into electricity. Solar cells are usually made of silicon. The solar panels used are in two sizes: 85 x 60 mm, 4 V, 200 mA and 50 x 50 mm, 2 V, 100 mA. The total voltage produced by the combined circuit of series, parallel and series-parallel is 8 volts. The shape of these panels is given below.

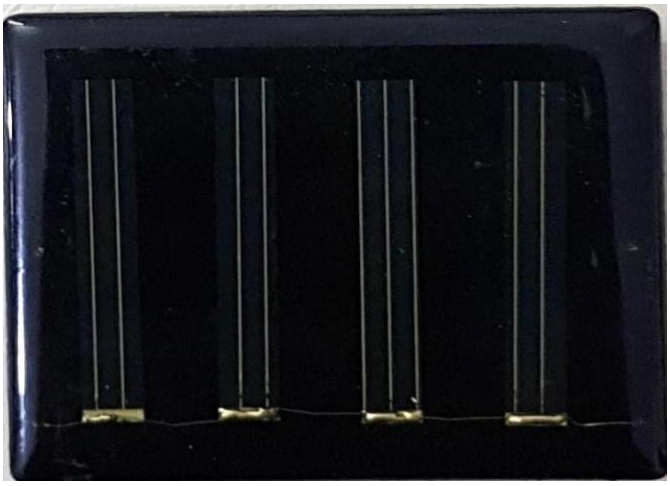

Figure 6. Solar panel 2 volts, 100 mA, dimensions: 50 x 50 mm

4.5. DC Alternator, 12 Volts

Figure 7. DC alternator, 12 volts

This alternator with technical specifications of 4 to 12 volts, 3000 milliamps and 2400 rpm is responsible for charging part of the car's 7.4-volt battery. The amount of battery charging by this alternator depends on the number of times the steering wheel is pressed from the brake pedal. Because the alternator is coupled with the turbine by a belt. It should be noted that by pressing the brake pedal, the microswitch installed below it commands the lowering of the damper, and when the turbine is exposed to the passing air flow, it rotates and causes the dynamo to move.

4.6. DC Panel Digital Voltmeter and Ammeter Module

Figure 8. DC panel digital voltmeter and ammeter module

DCN-288 red and blue panel voltmeter and ammeter is a group of measuring tools and modules that provide the user with digital data. By using this panel voltmeter and ammeter DC module, it is possible to measure the voltage in line 1 from zero volts to 100 volts and in line 2 current up to 10 amps. It has the necessary wire and connector, two-color digital display of ampere and voltage. This voltmeter is used to show the output voltage of the solar panels used in the car. This module includes the color of the data display screen: red and blue display, input voltage: from 0 to 100 volts direct DC input current 0A to 10 amps with DC voltage and female connectors connected on the module.

Module: DSN-VC288

Specification:

Voltage measurement range:	*0.0V-100V Max.*
Current test range:	*0-999mA, 0-10A, 0-50A, 0-100A (4range optional)*
Power supply range:	*4.5V ~ 24V*
Working current:	*< 20mA*
Voltage error:	*±0.1%*
Current error:	*±1%*
External shunt specifications:	*75 milli volt*
Refresh rate:	*300mS*
Display method:	*2 by 3, 0.28 "7-Seg LED*
Display colour:	*Red = V, Blue = A*
Lead length:	*15cm*
Dimensions:	*L=48 x H=29 x T=22 mm*
Mounting holes:	*46 x 27 mm*
Operating temperature:	*-10°C~65°C*

Precautions:

1. Range of 50A or 100A of the table must be connected to the shunt to power, or will burn out.

Pins: *2. This section of the head power supply range is 4 ~ 24V (out of range will burn), the measurement range is 0 ~ 100V max, such as the need for direct measurement of electric vehicles or solar systems voltage and current, please use the following paragraph.*

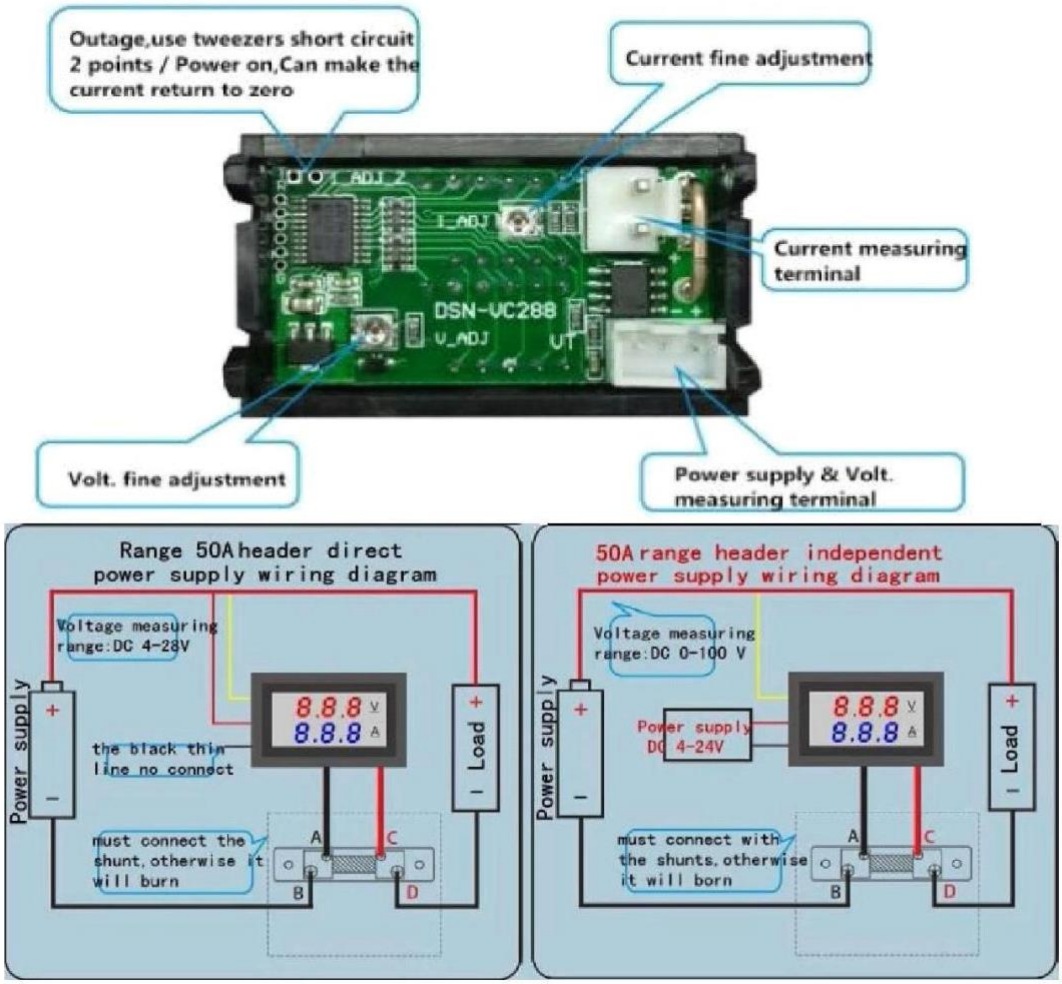

Figure 9. Module: DSN-VC288

4.7. Panel Voltmeter Module Zero to Hundred Volts DC

Figure 10. Panel voltmeter module zero to one hundred volts DC

This module is used to measure the output voltage of the DC generator, which can measure the voltage up to 100 volts and the current up to 10 amps.

4.8. Paul Diody

This part is used to convert AC voltage to DC. Since the output voltage of the generator used in this car is AC, by using this part it can be converted to DC voltage, which is adjusted to the desired range by the voltage stabilizer module and finally used to charge the car battery.

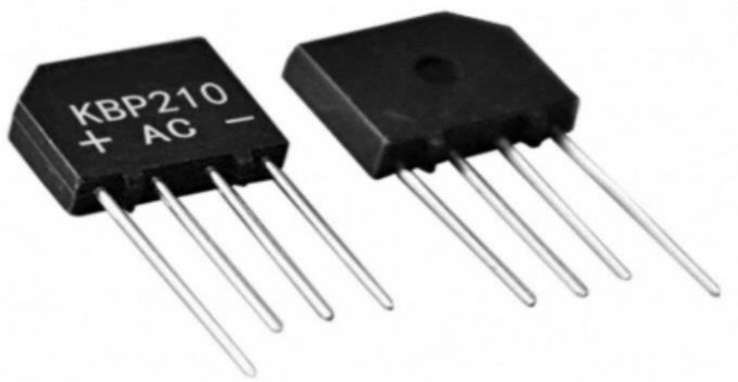

Figure 11. Paul Diody The

data sheet for the diode bridge is given below:

FCI Semiconductor

Data Sheet

2.0 Amp SINGLE PHASE SILICON BRIDGE

KBP200 . . . 210 Series

Description

Mechanical Dimensions

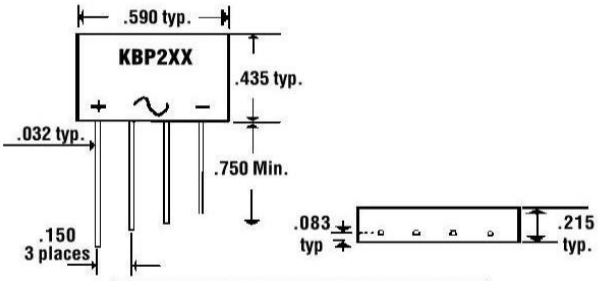

Mechanical Data: Mounting Position - Any.
Weight - 0.3 Ounces.

Features

- COMPACT SIZE
- LOW LEAKAGE CURRENT
- 60 AMP SURGE OVERLOAD RATING
- MEETS UL SPECIFICATION 94V-0

Electrical Characteristics @ 25°C.	KBP200 . . . 210 Series							Units
Maximum Ratings	**KBP200**	**KBP201**	**KBP202**	**KBP204**	**KBP206**	**KBP208**	**KBP210**	
Peak Repetitive Reverse Voltage...V_{RRM}	50	100	200	400	600	800	1000	Volts
RMS Reverse Voltage...$V_{R(rms)}$	35	70	140	280	420	560	700	Volts
DC Blocking Voltage...V_{DC}	50	100	200	400	600	800	1000	Volts
Average Forward Rectified Current...IF(av) T_A = 25°C	2.0							Amps
Non-Repetitive Peak Forward Surge Current...I_{FSM} 8.3 mS Single ½ Sine Wave Imposed on Rated Load	60							Amps
Forward Voltage...V_F Bridge Element @ 2.0 Amps	1.0							Volts
DC Reverse Current...I_R @ Rated DC Blocking Voltage T_A = 25°C	10							µAmps
T_A =100°C	1.0							mAmps
Operating & Storage Temperature Range...T_J, T_{STRG}	-55 to 125							°C

Figure 12. Paul Diody data sheet

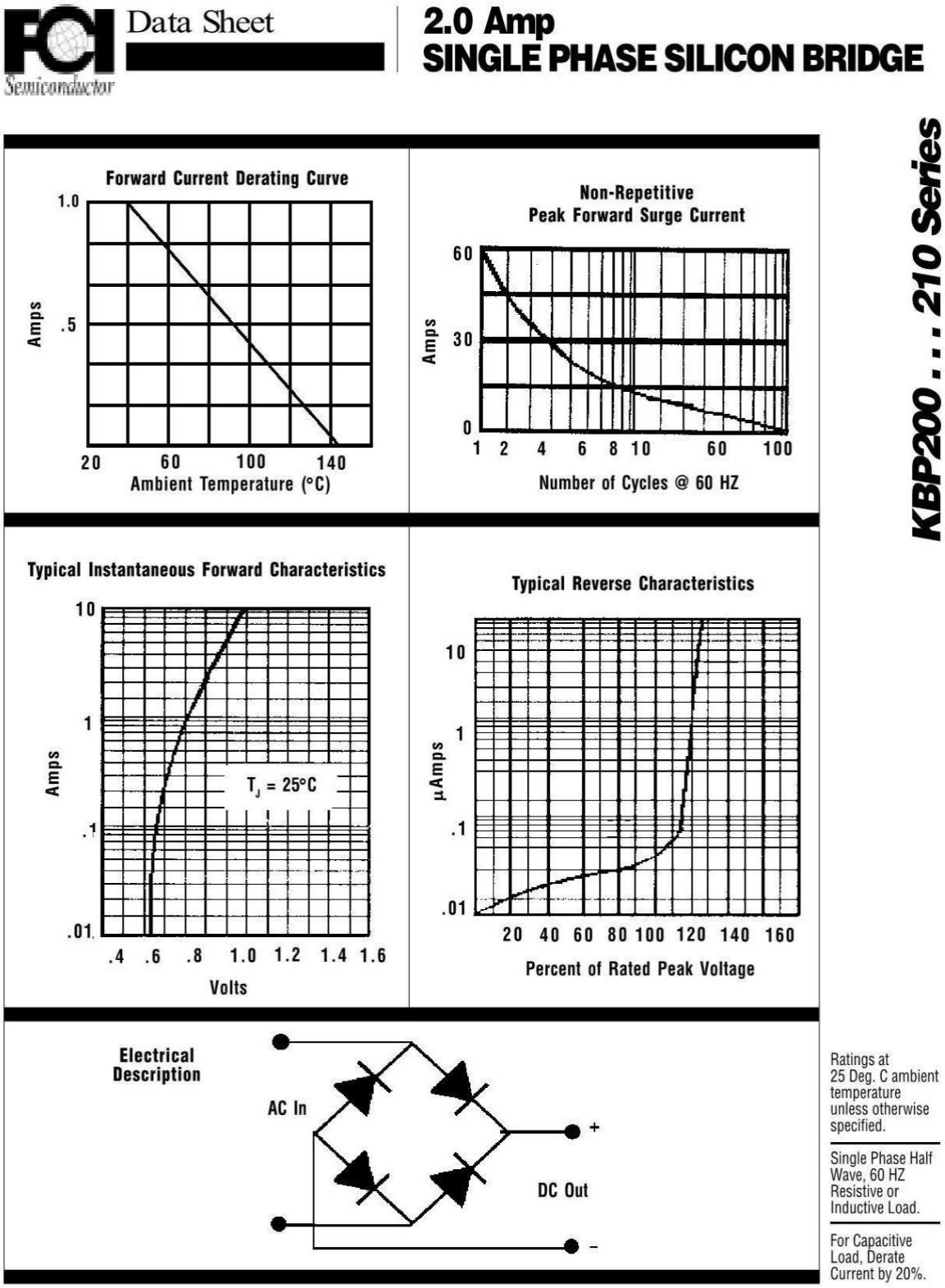

Figure 13. Paul Diody data sheet

4.9. Wind Turbine

In this car, a 70 mm long and 30 mm diameter cylindrical turbine with 20 blades is used to drive the generator. The passing air that is channeled by the damper to the turbine causes it to move and finally the DC generator to move and provides part of the voltage required to charge the battery.

Figure 14. Wind turbine

4.10. Placement of Equipment

4.10.1. View From Above

A view of the equipment installed on the car, which includes three pieces of 4-volt solar panels, two pieces of 2-volt solar panels, a 12-volt dynamo, a DC reducer-increase module related to solar panels, a gearbox motor under the damper, a damper and a turbine.

4.10.2. Sideview

The side view of the equipment installed on the car, which includes a left-right lever switch, a DC reducer-increase module related to a 12-volt generator, and a panel voltmeter.

Figure 15. Side view of the equipment installed on the car

4.10.3. Arrangement and Operation of Solar Panels

In the model used in this thesis, there are two solar panels with dimensions of 50 x 50 mm, 2 volts and 100 mAh, which are connected in series, and three solar panels with dimensions of 85 x 60 mm, 4 volts and 200 mAh, which are connected in series. are connected in parallel, it has been used that finally these two are connected in parallel. The output voltage of the formed circuit is equal to 8 volts and 700 milliamps, which corresponds to the specifications of the car battery.

4.10.4. Turbine Operation to Generate DC Electricity

The damper installed on the roof of the car cabin moves down with the control of the microswitch that is installed under the brake pedal. This causes the turbine to be exposed to the passing air flow and move, and as a result, the 12-volt dynamo that is connected to the turbine by a pulley and a belt rotates and produces AC electricity according to the speed

of the car. Next, the voltage produced by a diode bridge that is embedded in its path is converted into DC voltage and stabilized at the voltage required for car use by the reducer-increase module. A panel voltmeter is installed on the side view of the driver, which displays the voltage produced by the generator after stabilization. It should be noted that in this built model, the role of the microswitch is performed by the left-right lever switch installed on the car body on the driver's side.

4.10.5. Duration of Vehicle Operation with A Fully Charged Battery

After the car was placed on the vault, we put the gas pedal on the maximum speed. In this case, the car's operating time lasted about 44 minutes with the initial full charge of the battery. It should be noted that in the technical specifications of the car, which is scientifically and practically reported by the manufacturer, this time is mentioned as 20 minutes when the car is moving. The figure below shows the moment of the end of charging the car battery.

Figure 16. The moment of the end of charging the car battery

4.10.6. The Duration of The Car's Operation with A Fully Charged Primary Battery Plus Solar Panels

After placing the car under direct sunlight, we put the car on the roof and put the gas pedal on the maximum speed. It should be noted that the solar panels are connected as shown in the figure below and are connected to it by a step-up module at the required voltage to charge the car battery. In this case, the operating time of the car with the initial full charge of the battery was recorded for about 56 minutes.

Figure 17. The moment of the end of charging the car battery in the performance test of solar panels

4.10.7. Duration of Vehicle Operation with A Fully Charged Primary Battery Plus a Wind Turbine

In this part of the experiment, it is used to create an air flow through a hair dryer. The air flow produced by the hair dryer makes the turbine move. We put the car on the roof and put the gas pedal on the maximum speed. In this case, the operating time of the car with the initial full charge of the battery, with the operating time of the turbine for 10 minutes, was measured to be about 47 minutes.

Figure 18. The moment of the end of charging the car battery in the turbine performance test

Figure 19 shows a state where the brake pedal is not pressed and the damper is in a state where the passing air does not collide with the turbine and does not cause it to rotate. In Figure 20, the brake pedal is pressed and the damper is in a position where the passing air causes the turbine to rotate, and as a result, the generator moves.

Figure 19. Preventing the damper from hitting the passing air with the turbine

Figure 20. Turbine circulation due to passing air

5. Conclusion

In this research, the effect of installing a wind turbine as well as a solar panel to produce electrical energy to charge car batteries has been investigated. By a movable damper, the direct wind flow is directed towards the turbine and causes the turbine and generator to move and finally produces AC electricity and is converted to DC electricity by the inverter and is used to charge the batteries. In all the tests, the car is on the vault and the tests have been done with the maximum speed of the car. It is obvious that the effect of any external factors was not included in the experiments. In the first test, the duration of the car's operation with a fully charged battery was determined. In this case, the car's operating time lasted about 44 minutes with the initial full charge of the battery. In the second test, the duration of the car's operation with a fully charged primary battery and solar panels was investigated. In this case, the operating time of the car with the initial full charge of the battery was recorded for about 56 minutes. In the third test, the duration of the car's operation with a fully charged initial battery plus a wind turbine was checked, and the duration of the vehicle's operation with a fully charged initial battery lasted about 47 minutes. From the above tests, we conclude that installing a turbine, in addition to helping the braking system, helps to charge the car's battery. On the other hand, the solar panels used in the car also help to charge the car battery.

Author contributions

All authors contribute and this research received no specific grant from any funding agency in the public, commercial or not-for-profit sectors

Conflict of interest

The authors declare no conflict of interest.

References

[1] Amjad, S., Neelakrishnan, S., & Rudramoorthy, R. "Review of Design and Control Strategies for Hybrid Electric Vehicles." Renewable and Sustainable Energy Reviews 14, no. 3 (2010): 1104-1110.

[2] Beijing, X., & Li, J. "Photovoltaic Applications in Vehicles: Technology Review and Outlook." Solar Energy Materials & Solar Cells 100 (2012): 98-117.

[3] Bhatti, A. R., et al. "Electric Vehicles Charging Using Solar and Wind Energy." Renewable and Sustainable Energy Reviews 54 (2016): 34-47.

[4] Bossche, P. V. den, & Vandenbossche, L. "On-board Electrical Energy Management in Electric Vehicles." International Review of Electrical Engineering 5, no. 3 (2010): 904-913.

[5] Caiti, G., & Miceli, R. "PV Systems Applied to Electric Vehicles: A Review." Energies 10, no. 4 (2017): 450-64.

[6] Chu, H. C., et al. "Energy Flow and Regenerative Braking Analysis for Electric Vehicle Propulsion System." International Journal of Automotive Technology 11, no. 4 (2010): 571-579.

[7] Cobbenhagen, A.T.J.R. "Performance Analysis of Solar Cars for Everyday Use." Master's thesis, Eindhoven University of Technology, 2016.

[8] Divya, K. C., & √òstergaard, J. "Battery Energy Storage Technology for Power Systems-An Overview." Electric Power Systems Research 79, no. 4 (2009): 511-520.

[9] Eggers, T., & Adamowicz, J. "Photovoltaic Vehicle Roofs: A Feasibility Study." Journal of Solar Engineering 132, no. 1 (2010): 011008.

[10] Darshan Bhavesh Mehta . "Ergonomics of a Custom Made Solar Electric Road Vehicle". International Journal of Engineering Trends and Applications (IJETA) V3(4): Page(29-33) Jul - Aug 2016.

[11] El-Shimy, M. "Viability Analysis of PV Power Plants in Egypt." Renewable Energy 34, no. 10 (2009): 2187-2196.

[12] Farret, F. A., et al. "Hybrid Energy Systems for Off-Grid Electric Vehicle Charging." IEEE Transactions on Vehicular Technology 59, no. 3 (2010): 978-985.

[13] Gibson, T. L., & Kelly, N. A. "Solar Photovoltaic Charging of Lithium-Ion Batteries." Journal of Power Sources 195, no. 12 (2010): 3928-3932.

[14] Haifeng, L., et al. "Experimental Study of a Solar-Powered Model Car." Renewable Energy 34, no. 7 (2009): 1793-1798.

[15] Hans, M.-J., & Huseyin, B. "Photovoltaic Powered Small Electric Vehicles." Journal of Solar Energy Engineering 133, no. 3 (2011): 034505.

[16] Hannan, M. A., et al. "A Review of Energy Management Strategies for Electric and Hybrid Electric Vehicles." Renewable and Sustainable Energy Reviews 29 (2014): 135-150.

[17] Henderson, W.D. "Solar-Powered Vehicles: Technology and Future Potential." Progress in Photovoltaics 21, no. 2 (2013): 41-51.

[18] Holman, J.P. Experimental Methods for Engineers. 8th ed. New York: McGraw-Hill, 2012.

[19] Jossen, A., Garche, J., & Sauer, D.U. "Operation Conditions of Batteries in PV Applications." Solar Energy 76, no. 1-3 (2004): 759-769.

[20] Karthikeyan, D., Uma, G., & Devadoss, E. "Hybrid Solar-Wind Energy Based Electric Vehicle Charging Station." Applied Mechanics and Materials 787 (2015): 336-339.

[21] Khan, M. J., & Iqbal, M. T. "Dynamic Modeling and Control of a Small Wind-Fuel Cell Hybrid Energy System." Renewable Energy 28, no. 4 (2003): 511-522.

[22] Kordel, M., & Schmid, M. "Operation of Photovoltaic Electric Vehicles in Urban Mobility." IEEE Transactions on Vehicular Technology 63, no. 4 (2014): 1636-1644.

[23] Liu, Y., Tzeng, S. and Wang, R. "Performance Analysis of Regenerative Braking in Hybrid Vehicles." International Journal of Automotive Technology 13, no. 5 (2012): 701-707.

[24] Ludin, N. A., et al. "Prospects for Photovoltaic Powered Vehicles in Urban Mobility." Renewable & Sustainable Energy Reviews 33 (2014): 305-312.

[25] Ovatman, T. et al. "Regenerative Braking System Analysis in Electric Vehicles." Advances in Mechanical Engineering 7, no. 9 (2015): 1-9.

[26] Pacioni, L., & Brian, F. "Wind-Solar Hybrid Power for Electric Vehicles." Journal of Renewable and Sustainable Energy 5, no. 6 (2013): 063108.

[27] Saleh, R., et al. "Integration of Wind Turbine Powered Regenerative Braking for Small EVs." International Journal of Renewable Energy Research 2, no. 4 (2012): 701-705.

[28] Sharma, A., & Mullick, S.C. "Hybrid Energy Systems for Vehicle Auxiliary Power." Solar Energy Materials & Solar Cells 110 (2013): 5-14.

[29] Than, A. N., & Duong, T. D. "Regenerative and Photovoltaic Hybrid Systems in Small Cars." Journal of Advanced Transportation 48, no. 2 (2014): 113-126.

[30] Wu, Y., & Xue, Q. "Onboard Renewable Charging Methods for Electric Vehicles: A Review." Renewable and Sustainable Energy Reviews 78 (2017): 508-521.

[31] Taghipour M, Sedaghatmanesh P, Safari M, Hekmati N. Identification and modeling of radio wave propagation channel in industrial environments. International Journal of Innovative Research in Science, Engineering and Technology 2015; 4(9): 9260–9271. doi: :10.15680/IJIRSET.2015.0409142

[32] Taghipour M, Moghadam A, MoghadamNaghdi Shekardasht B. Implementation of software-efficient DES Algorithm. Science Publishing Group 2015; 3(1): 7–22. doi: 10.11648/j.net.s.2015030301.12

[33] Sedaghatmanesh P, Taghipour M. Reduction of losses and capacity release of distribution system by distributed production systems of combined heat and power by graph methods. American Journal of Electrical Power and Energy Systems 2015; 4(6): 84–99. doi: 10.11648/j.epes.20150406.12

[34] Taghipour M, Safari M, Bagheri H. A survey of BPL technology and feasibility of its application in Iran (Gilan Province). Science Journal of Circuites, Systems and Signal Processing 2015; 4(5): 30–40. doi: 10.11648/j.cssp.20150405.11