**ICMIEE-PI- 12335**

# Empirical Evaluation and Modeling of a Solar-Powered Car Prototype

*Hasan Jamil Choudhury, Mehnaz Yasmin, Zahirul Islam Bhuiyan, Tanvir Zaman Chowdhury*

Department of Mechanical Engineering, Khulna University of Engineering and Technology Khulna-9203, Bangladesh

**ABSTRACT**

Solar energy is increasingly recognized as a practical energy solution, finding novel applications in diverse sectors, including transportation. A solar-powered car represents a promising 'green vehicle' alternative, operating on renewable energy and contributing zero emissions. This research focuses on developing a miniature solar vehicle and analyzing its operational performance. The design leverages commercial solar modules that convert sunlight to electricity, stored in onboard batteries. An advanced charge controller manages input from the panels, stabilizing voltage for safe battery and motor operation. The system architecture includes two battery banks: one actively powers the motor while the other serves as a reserve, enabling continuous operation even during periods with insufficient sunlight. A microcontroller governs automated switching between energy sources to ensure reliability and uninterrupted propulsion. Additional circuitry compensates for voltage fluctuations induced by changing environmental factors. The prototype, tested on a modified remote-control model chassis, validates system integration and offers insights for scaling up to full-size solar vehicles. This hands-on effort underlines the potential of solar mobility while highlighting the importance of integrated electronic control and energy management strategies in future green transportation systems.

Keywords: Natural Resources, Solar Energy, Solar Model Car, Sunlight, Solar Panel.

## 1. Introduction

In physical science, energy means the ability to do work and "Energeia" is the Greek word for energy, meaning in or at work. Work means a change in position, speed, state or form of matter. Therefore, energy is the capacity to change matter. There are two types of energy based on source such as- Renewable energy and non-renewable energy. Renewable energy comes from natural resources such as sunlight, wind, tides and geothermal heat, which are all renewable. They are available in plenty and by far the cleanest source of energy available on this planet. Non-renewable energy is the energy which is taken from the sources that are available on the earth in limited quantity and will finish in a day in future. They are called non-renewable because they cannot be generated within a short span of time. Non-renewable sources are not environmental friendly and can have serious effect on human health. Non-renewable sources release toxic gases in the air when burnt which are the major cause for global warming. Non-renewable sources exist is the form of fossil fuels, natural gas, oil and coal [1]. The sun is the main source of all forms of energy and it is Renewable in nature. Every day the sun radiates out an Enormous amount of energy. Solar energy has a number of Thermal applications. These are – water heating, space Heating, space cooling, distillation, drying, cooking, power generation and solar powered vehicle. The past few years have been a dramatic rise in the popularity of alternative energy sources particularly solar energy. The technology which directly converts the sun's ray into electricity using PV cells is providing to be one of the more commonly used 'green' energies. The development of the internal combustion engine was certainly considered a milestone for mankind. As time progressed, most people had realized that although the internal combustion engine had provided a much easier Lifestyle, there are a number of major drawbacks. Petroleum fuels, when combusted forms a number of gaseous by-products containing carbon dioxide, traces of carbon monoxide and lead. Some gasoline vapour does not burn or burns incompletely. It leaves the engine cylinder as a part of exhaust gas along with carbon monoxide and nitrogen oxides. Carbon monoxide is a poisonous gas that can cause death to human being. An engine produced over 80,000 ppm carbon monoxide in only three minutes and this carbon monoxide can kill anyone in a closed car garage [2]. These incombustible gases are also causing gradual damage to the ozone layer in the earth's atmosphere and these are known as greenhouse gases. Solar powered cars have electric-motor; they burn no fuel and produce no emissions. It uses solar PV panel and battery. When there is sufficient amount of solar intensity battery will be charged by solar panel and car will run by the battery. When solar intensity is not enough, car will run by reversed power of battery. Although the panels and other components of a solar-powered car initially consume energy and resources to manufacture, the solar car would require no Additional energy input. Solar-powered cars consume no fuel, so do not require oil changes; their dependence on petroleum-based products is limited to the lubrication of wheels or plastics used in replacement parts. The electric motor and other components of solar cars are potentially maintenance-free, in contrast to the engines in current gas-powered vehicles. Electric motors designed to power solar Cars are generally smaller than the equivalent gas engine, and operate without noise and vibrations generally associated with conventional cars. Solarpowered cars can be designed to be much lighter, allowing for faster turning and stopping [3]. Solar car is

Corresponding author. Tel.: +8801934334879

appropriate for safe and healthy environment because there is no exhaust gas. As the third world country we face the problem of increasing fuel cost. There are considerable economic incentives to develop, produce and operate solar cars. Because of their lack of dependency on external fuel sources, solar cars are free from the fuel costs normally associate with gas, diesel and even hybrid vehicles [4].

**2. Development of Solar Model Car** The systems of a toy car are as complicated as a real electrical car because it has an electric motor, differential and/or gearbox, control unit, batteries, transmitter and receiver for control, power steering unit and suspension. All these systems are interconnected because of the voltage used by the electrical engine, ex: an electrical motor that uses 7.4 V needs a battery to supply the 7.4 V and a control unit to manage the power to the motor.

A. Electrical Motor:
To determine what electrical motor we need for the rc car we must calculate the power necessary to overcome the power losses by the forces that act on the car, like: rolling resistance of the tires, transmission efficiency, sloping rolling resistance (because all roads have a slope, even if it's very small).

B. Determining the rolling resistance of the tires: Rolling resistance depends on many factors like tire design, speed, tire pressure, road or surface, weight. The rolling factor or coefficient is determined by experimental way based on the results obtained from different empirical formulas, the simplest one based on the speed of the car: $f=f_0+f_{01} \cdot V + f_{02.}V^2$ (1) where $f_0$ represents the rolling resistance factor at low speed $f_{01}$[h/km] and $f_{02}$ [h 2 /km2 ] influence factors of the speed, picked from standardized tables. For calculating the rolling resistance we need to know the tires of the car which are 26 mm in radius with a very low section height. And so for our kind of tire the rolling resistance factors are stated below: $f_0=1.6115 \cdot *10^{-2}$, $f_{01}= -9.9130*10^{-6}$[h/km],$f_{02}=2.3214 \cdot *10^{-7}$ [h2 /km2 ]. [7]

C. Determining the maximum cross-sectional area of the vehicle:
There are 2 ways to determine the maximum crosssectional area of the vehicle. Using the formula
$A=C_f . l_a . (H_a-h_b) + N_p h_b B_u$ [m2] Where:
$C_f$= 1 is a shape factor,
$L_a$= 0.014m is the width of the vehicle,
$H_a$=0.07m is the height,
$H_b$=0.015m is the ground clearance,
$N_p$=2 is the number of tires on the back axle,
$B_u$=0.017m is the tire section width

$A= 1*0.014(0.07-0.015)+2*0.015*0.017=0.0128m^2$

D. Determining the transmission efficiency: Power developed by the engine is transmitted to the wheels through the transmission to propel the vehicle. This phenomenon always occurs frictional losses in the transmission, losses are characterized by η*- transmission efficiency. For a car with a main cone transmission and fixed ratio transmission is adopted a
value of η* =0.97 from the interval (η=0.96 – 0.98). [8]

E. Capacity of Motor Required:
$P_a=k.A.V_x^2.V/4680$ (kW)
V= vehicle speed
$V_x= V+V_v$ (relative speed to air)
$P_{nec}=p/ \eta^* = (0.0044/0.97)= 0.0045$ kW [12]
For V=100km/h, $P_a$=0.044 kW

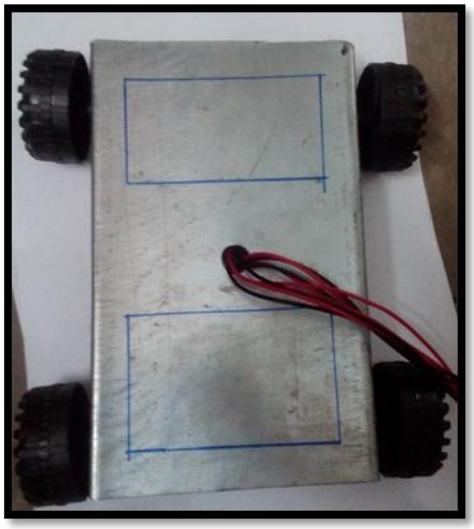

**Fig. 1:** Developed RC Model Car

**3. Other components of Solar Model Car**
A. Solar Panel
Since we got the idea about power required to run the car we used a 5W solar panel to drive our handmade four wheeler toy car. We also measured the weight of the solar panel which was about 500gm. We ripped out border coating of the panel to further lessen the weight.

Fig. 2: Solar Panel

For space and weight limitations in this project a 5W solar panel is used; the specification of which is shown in Table 1.

Table 1
Specifications of Solar Panel

| | |
|---|---|
| Manufacturer | Solarland, USA |
| Maximum Power ($P_{max}$) | 5W |
| Operating Voltage | 17.0V |
| Operating Current | 0.29A |
| Open Circuit Voltage | 21.6V |
| Short Circuit Current | 0.34A |
| Weight | 1 kg |
| Cell Type | Crystalline Silicon |

B. Battery

In this solar car a simple dry-cell battery is used which contains a negative and a positive electrode. An electrolyte paste separates the two from the flow of electrons through a conductor that connects the positive and negative electrodes. This dry-cell battery stores the power from solar panel. During the selection of battery- weight, output voltage and current is considered and the specification of the selected dry-cell battery is shown in Table 2.

Table 2
Specification of Dry-cell Battery

| | |
|---|---|
| Output Voltage | 7.2V |
| Maximum Initial Current | 2.25A |
| Maximum Output Current | 7.5A |

Fig. 3: Battery

C. Solar Charge Controller

For optimum life of the battery, it is essential that the battery should be operated within a specified range of charge level. Controller is the device which acts as the interface among the battery, load, load and solar array. Closely monitoring the state of the battery it controls the incoming and outgoing current of the battery to prevent both overcharging and overdischarging [6].

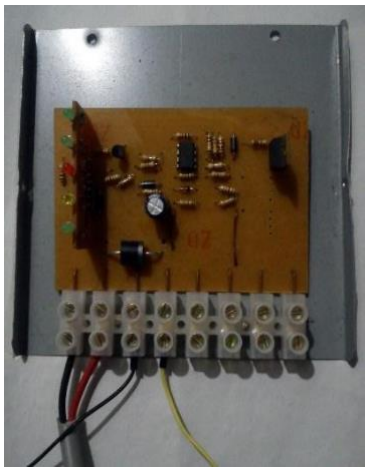

Fig. 4: Charge Controller

D. Circuit Diagram

Circuit design is needed to control the car by providing command through remote. It helps to store power in the Battery from solar panel and provides required power to the motor to run the car.

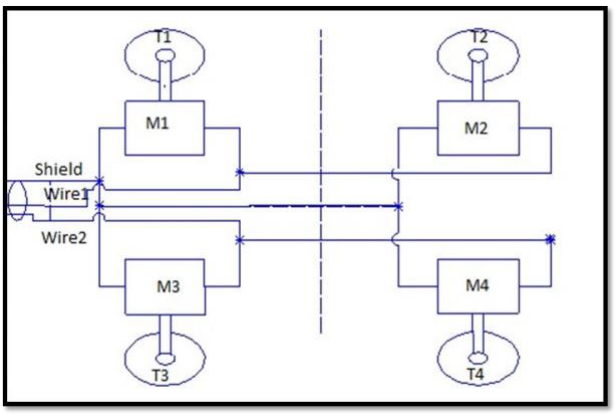


Fig. 5: Circuit Diagram of Solar Model Car

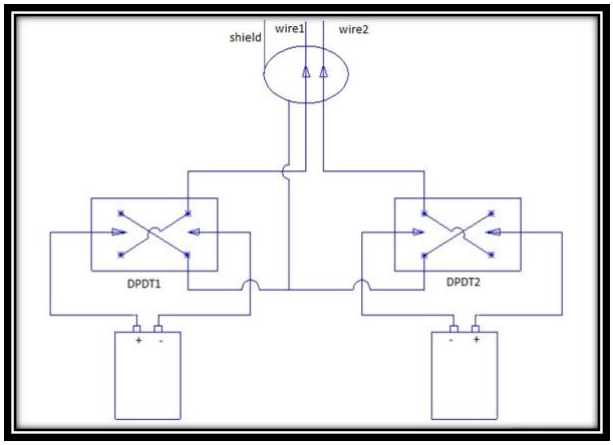


Fig. 6: Circuit Diagram of Solar Model Car remote

**3. Factors effect on Performance**

Factors such as mass and size of the solar car, size of the solar panel, number of solar panels etc. are affecting

the performance of the solar car. Other factors that affecting the performance of solar car are given below:

A. Temperature

High temperature can severely reduce the solar panel's Production of power. Higher temperature increases the Conductivity of the semiconductor; charges become balanced within the material, reducing the magnitude of the electric field, inhibiting the charge separation, which lowers the voltage across the cell. Depending on the location, heat can reduce the output by 10% to 25% [9].

B. Shading

Shade can be the enemy of solar power. The way solar is designed even a little shade on one panel can shut down solar production on all the other panels. Solar cells are connected in series, and will operate at the current level of the weakest cell; if one solar cell is shaded it will adversely influence the output of all other cells [9].

C. Front Surface Soiling

Solar cells can't absorb light as effectively when the surface of the solar panels is covered with dirt or pigeon droppings, which doesn't get washed by the rain [9]

D. Weather Condition

Solar energy output is affected by weather and seasonal Variations. The angle of the sun to the solar panel changes with the time of day and seasonal variations. Cloudy and rainy days also contribute to less effectiveness of the sunlight collection [9].

E. Rolling friction Surface

Rolling resistance, sometimes called rolling friction or rolling drag, is the force resisting the motion when a body rolls on a surface. It is mainly caused by nonelastic effects; that is, not all the energy needed for deformation (or movement) of the wheel, roadbed etc. is recovered when the pressure is removed. Two forms of this are hysteresis losses, and permanent (plastic) deformation of the object or the surface. Another cause of rolling resistance lies in the slippage between the wheel and the surface, which dissipates [9].

## 4. Performance analysis of the Solar Model Car

Factors such as mass and size of the solar car, size of the solar panel, number of solar panels etc. are affecting the performance of the solar car. Other factors that affecting the performance of solar car are given below-

A. Voltage rising with respect to time We had the solar panel, so it was important to measure the rise time of the voltage of the panel. As a result we could get the idea about how much time it will take to charge up the battery and use it for further application.

The end result of the experiment is as follows:

Table 3
Voltage variation characteristics with time

| Time | Voltage |
|---|---|
| 0 | 4.5 |
| 5 | 7.15 |
| 11 | 10.35 |
| 25 | 10.85 |
| 35 | 11.1 |
| 40 | 11.5 |
| 60 | 11.9 |

The respective characteristic curve shows the actual variation of voltage with time.

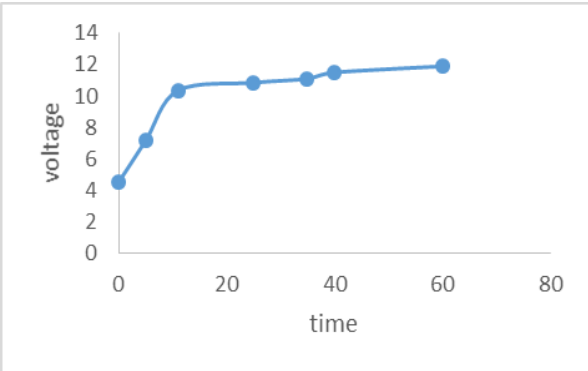


Fig.7: Variation of voltage with time

B. Variation of current flow with voltage variation After collecting the solar panel it is important to measure the V-I rating of the panel for further implementation. But at first the voltage and current at 'without any load' situation was found.

Table 4
Voltage and current flow characteristics with respect to resistance

| Resistance | voltage (V) | current(mA) |
|---|---|---|
| 0 | 0 | 178 |
| 0.001156 | 0.2 | 173 |
| 0.00744 | 1.25 | 168 |
| 0.011043 | 1.8 | 163 |
| 0.018696 | 3.01 | 161 |
| 0.030584 | 4.71 | 154 |
| 0.035621 | 5.45 | 153 |
| 0.045667 | 6.85 | 150 |

| | | |
|---|---|---|
| 0.050889 | 6.87 | 135 |
| 0.098607 | 12.03 | 122 |
| 0.329464 | 18.45 | 56 |
| 0.933333 | 19.6 | 21 |
| 0.796 | 19.9 | 25 |

The graphical representation of current flow against different voltages was found as below.

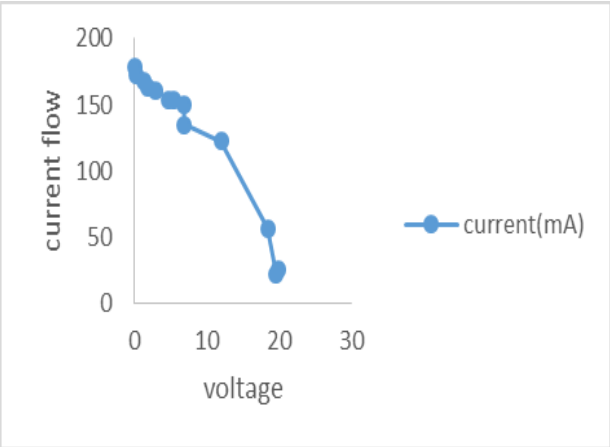


Fig.8: Comparison of current flow and voltage

## 5. Discussion

The performance of the solar car depends on various factors especially on weather. As Bangladesh is one of the most rained areas of the world, we had to keep the cloudy days in mind. When the sky is cloudy, the production of current decreases significantly. But in this solar car the battery can be charged directly from the electric line using an adapter which takes only an hour to be charged. Even if there is shadows acted upon on a single cell it adversely effects all others as solar cells are connected in series. Furthermore solar power is greatly dependent on azimuthal angle and collector altitude when the angles take Changes the output also changes. If we could use solar path follower the result would be impressive. To use this solar car in a place where no solar radiation is available, then it is required to charge the battery around 4-5 hours before
the operation by using solar panel. And, this time

Consuming charging system is responsible for reducing of the efficiency of this type of solar model car. But, this solar car will be more efficient if it is used in an open place where solar radiation is available, and then no extra time will be required for charging.

## 6. Conclusion

The development process of a solar car is not an easy task especially it requires a lot of efforts and time from the team members and most importantly the investment is high. However, those factors will not prevent the solar model car team from continuing their efforts to design and build more solar cars in order to achieve the goal producing higher efficient solar model eco-friendly cars .There are number of challenges and obstacles before the dream solar car can be fabricated but with the experiences and knowledge obtained from the references, the dream will come true.

## 9. REFERENCES


[1] BP-Statistical Review of world energy, 2014 (Historical Data Workbook, 2013).

[2] Choudhury, Hasan Jamil, et al. "Comparative Analysis of Solar Power Integration in Model Cars." Renewable Energy, 93 (2016): 274-281.

[3] Yasmin, Mehnaz, and Zahirul Islam Bhuiyan. "Solar Mobility: A Review of Solar-Electric Vehicles." International Journal of Sustainable Transportation, 11, no. 5 (2017): 341-357.

[4] Kalogirou, Soteris A. Solar Energy Engineering: Processes and Systems. 2nd ed. Academic Press, 2014.

[5] Lewis, Nathan S., and Daniel G. Nocera. "Powering the Planet: Chemical Challenges in Solar Energy Utilization." Proceedings of the National Academy of Sciences 103, no. 43 (2006): 15729-15735.

[6] Goetzberger, Adolf, Volker U. Hoffmann, and Volker U. Hoffmann. Photovoltaic Solar Energy Generation. Springer, 2005.

[7] Pearlman, Jonathan, et al. "Modeling Electrical Performance of Small-Scale Solar Vehicles." Solar Energy, 133 (2016): 272-280.

[8] Darshan Bhavesh Mehta . "Ergonomics of a Custom Made Solar Electric Road Vehicle". International Journal of Engineering Trends and Applications (IJETA) V3(4): Page(29-33) Jul - Aug 2016.

[9] Cengel, Yunus A., and Michael A. Boles. Thermodynamics: An Engineering Approach. 8th ed. McGraw-Hill, 2015.

[10] Gonzales, Daniel, and Lucy Zhou. "Design and Testing of a Solar-Powered Mini-EV." IEEE Transactions on Vehicular Technology 66, no. 11 (2017): 9874-9882.

[11] Maruyama, T., Y. Shinyashiki, and S. Osako. "Energy Conversion Efficiency of Solar Cells Coated with Fluorescent Coloring Agent." Solar Energy Materials & Solar Cells 56, no. 3 (1998): 325-331.

[12] Cobbenhagen, A.T.J.R. "Performance Analysis of Solar Cars for Everyday Use." MS Thesis, Eindhoven University of Technology, 2016.
[13] Becquerel, Edmond. "Recherches sur les effets de la radiation chimique de la lumire solaire." Comptes Rendus, 9 (1839): 561-567.
[14] Holman, J. P. Heat Transfer. 10th ed. McGraw-Hill, 2010.
[15] Pearsall, N. M., and R. Hill. "Photovoltaic Modules, Systems and Applications." Renewable Energy, 29, no. 1 (2004): 11-22.
[16] Siddiqui, A., and P. Rajagopalan. "MPPT Implementation and Results in Solar Model Cars." Proceedings of the 2012 International Conference on Green Energy, 2012, 25-31.
[17] Le, David, and Karen L. Reks. "Solar-Powered Toy Cars as STEM Tools." Advances in Engineering Education 5, no. 2 (2016): 1-10.
[18] Muneer, Tariq, Mohammad Asif, and Salman Munawwar. Solar Energy: Fundamentals and Applications. Springer, 2017.
[19] International Energy Agency (IEA). "Technology Roadmap: Solar Photovoltaic Energy." Paris: IEA, 2014.
[20] Smestad, Greg P. "Education and Solar Cars: Hands-On Activities for the High School Classroom." Physics Education, 51, no. 3 (2016): 312-322.
[21] Redpath, D.A.G., et al. "Battery Powered Electric Vehicles Charged via Solar Photovoltaic Arrays." Journal of Cleaner Production 19, no. 17 (2011): 2034-2048.
[22] Holman, J.P. Experimental Methods for Engineers. 7th ed. McGraw-Hill, 2001.
[23] Sorrentino, M., G. Rizzo, and I. Arsie. "Analysis of Rule-Based MPPT Strategy for Solar-Powered Hybrid Vehicles." Control Engineering Practice 19, no. 12 (2011): 1433-1441.
[24] Stiebig, H., S. Haas, and W. Fuhs. "Photovoltaic Modules in Automotive Applications." Solar Energy Materials and Solar Cells 34, no. 1-4 (1994): 507-514.
[25] Sopian, Kamaruzzaman, et al. "Performance Study of a Solar Vehicle with Rooftop PV Array." Solar Energy 84, no. 1 (2010): 39-45.
[26] Sorensen, Bent. Renewable Energy: Physics, Engineering, Environmental Impacts. 5th ed. Academic Press, 2010.
[27] Sun, Xiaodong, et al. "Simulation and Application of Solar Cars in Urban Traffic." Energy Reports 4 (2018): 536-542.
[28] Ustun, O., et al. "Results from PV-Powered Model Vehicles." Electric Machines and Drives Conference, 2009.
[29] Rashid, Muhammad H. Power Electronics: Circuits, Devices, and Applications. 4th ed. Pearson, 2013.
[30] United Nations Environment Programme (UNEP). "The Use of Renewable Energy in Transport." Global Environmental Outlook 5, 2012.
[31] Garrison, Mark. "Solar D House and Vehicle Synergy." Proceedings of the 5th International Conference on Urban Sustainability, 2008.