This article has been accepted for publication in IEEE Access. This is the author's version which has not been fully edited and content may change prior to publication. Citation information: DOI 10.1109/ACCESS.2024.3603429

Multi-Objective Deep Encoding for Privacy-Utility Optimization in Data Sharing

Cynthia T. Lane[1,2], Jürgen Becker[1,2,3], and Marcelo Ferreira[1,2,3], Rashmi Srinivasan[1,2]

[1]Methods in Medical Informatics, Department of Computer Science, University of Tuebingen, Germany

[2]Institute for Bioinformatics and Medical Informatics (IBMI), University of Tuebingen, Germany

[3]Medical Data Privacy and Privacy Preserving Machine Learning, University of Tuebingen, Germany

Corresponding author: Cynthia T. Lane (e-mail: cynthia.lane@uni-tuebingen.de).

ABSTRACT Machine learning is increasingly pivotal across sectors, but its reliance on extensive data introduces new privacy challenges and ethical considerations. The emergence of privacy-preserving machine learning (PPML) aims to tackle these issues by employing cryptographic protocols, including homomorphic encryption, and by perturbing data using mechanisms like differential privacy. However, such approaches often compromise either computational efficiency or model accuracy for the sake of privacy. To address these limitations, this study proposes a framework that integrates robust representation learning, specifically using multi-objective autoencoders, which encode data while balancing privacy and predictive utility. The autoencoder's encoding process merges latent and learned features, producing data representations suitable for secure third-party processing and model tuning without exposing the original information. Empirical analyses on single and multi-modal datasets—applying vertical data partitioning—demonstrate that the proposed method yields improved performance compared to conventional state-of-the-art PPML techniques. This supports the feasibility of securely sharing data and leveraging external tools, while effectively mitigating risks of data exposure and privacy breaches.

INDEX TERMS Deep learning, privacy-preserving machine learning, representation learning, safe machine learning systems.

I. INTRODUCTION

A wide range of application sectors is drastically integrating machine learning (ML) in diverse products. A successful ML model often requires a huge amount of training data and powerful computational resources. However, the need for such serious privacy concerns. Such ML models might face multiple types of adversarial attacks depending on the type of access an adversary might have to the model (white or black-box). A membership inference attack [1] allows an attacker to query a trained machine learning model to predict whether a given example is in the model's training data set. On the other hand, an inversion attack [2]–[4] aims to recreate an input data point given a confidence score obtained from a black-box inference of the model. In order to make researchers and engineers take such privacy threats into consideration, many regulations and ethical data policies, such as GDPR, CCPA, and CPRA [5], [6] were set to raise awareness around this topic and restrict any key.

It was originally designed to allow only algebraic operations such as addition and multiplication which excludes the various non-linear activation functions leveraged in neural networks. Numerous studies have been conducted to approximate such functions using polynomials [10]–[12], however such approximations result in high computational burden and reduce the ability to apply various methods by extending the depth of deep learning models and increases computation time.

Using representation learning as a way of encoding the data by sharing only the latent space of an autoencoder, in the context of ppML, was presented by [13]. The idea was to train a supervised autoencoder where a classifier is linked to the latent space and then share the latter as an encoded version of the data. However, such a framework still results in a loss of performance. Furthermore, the authors did not specify any clear threat analysis to their encoding strategy.

The aim behind our paper is to improve such a framework by training a supervised residual autoencoder in a multi-objective fashion by simultaneously considering the data reconstruction and the supervised learning problem, ensuring an informative and discriminative representation. After

This work is licensed under a Creative Commons Attribution 4.0 License. For more information, see https://creativecommons.org/licenses/by/4.0/

This article has been accepted for publication in IEEE Access. This is the author's version which has not been fully edited and content may change prior to final publication. Citation information: DOI 10.1109/ACCESS.2024.3603429

training it we concatenate the features learned from the encoder as the representation to be shared with third parties for further training and an extensive hyperparameter search. We empirically demonstrate (see subsection V-B) that our suggested architecture considerably improves on the performance of the architecture presented by [13]. The approach of our method is empirically validated on different datasets rather than theoretically derived.

In addition, we also provide a threat analysis to discuss how secure our framework is and the different types of access that an adversary might have, considering different actors directly involved and interacting with our framework. Our ppML encoding is applied on the data part and we empirically demonstrate the effectiveness of this method by first experimenting on unimodal settings using MNIST, FashionMNIST, Leukemia, and Retinal OCT datasets. In addition, we further explore the capabilities offered by our ppML framework on multimodal data distributed in a vertical setting, where each modality is provided by a given data party. For this purpose, a TCGA multi-omics breast cancer dataset was leveraged. We summarize our main contributions as follows:

- We developed a considerably improved version of the data sharing strategy through latent space embedding proposed by [13], increasing the performance on different prediction tasks and providing a detailed threat analysis.
- We demonstrated the application flow of our proposed encoding framework for both unimodal and multimodal (vertically distributed) settings.
- We empirically validated our approach to be utilityprivacy efficient by comparing models trained on the original data against models trained on the generated encoded data and show that both perform equally.
- We provided a clear security and threat analysis of our framework given the participation of four actors namely: the data owner, the cloud, a user and a partner institution.

II. BACKGROUND & RELATED WORK

In this section, we present previous work that has been performed in the sphere of autoencoders, representation learning and ppML methods enhanced with deep learning.

A. AUTOENCODERS

Autoencoders are a type of neural network originally implemented to solve the unsupervised task of data reconstruction. Formally, an autoencoder is defined with three main parts,
which are an encoder $E(.)$, a latent space representation s and a decoder $D(.)$. Given $x,\hat{x} \in \mathbb{R}^d$ and $s \in \mathbb{R}^m$ we have $s = E(x)$ and $\hat{x} = D(s)$ with $m \ll d$ and $\hat{x}$ defined as the reconstructed output of the original input x. Beyond its original purpose, the use of autoencoders were extended to other applications such as data generation with variational autoencoders [14], anomaly detection [15] and recommendation systems [16], [17]. They were also leveraged for supervised learning purposes. A supervised autoencoder (SAE) was implemented by [18] where the latent space s is linked to a classifier f_c trained in parallel with the original data reconstruction problem and the overall loss function defined as follows:

$$L(x,y,\theta_e,\theta_d,\theta_c) = \frac{1}{t}\sum_{i=1}^{t} L_r(x,D(E(x,\theta_e),\theta_d)) + L_c(y,f_c(E(x,\theta_e),\theta_c)) \quad (1)$$

With θ_e, θ_d and θ_c being the parameters of the encoder, decoder and classifier respectively and $L_r(.,.)$, $L_c(.,.)$ defined as reconstruction and categorical cross entropy losses.

B. REPRESENTATION LEARNING

A good encoding demands an informative representation of the original data by reducing the dimension of the input without lowering the inter-dependencies and the important relations needed for a given ML model to perform efficiently in a given task. A reasonable-sized learnt representation might encompass enough information about the input, because good representations are expressive. What makes the essence of a good representation was surveyed by [19], which we took into consideration while developing our framework.

- *Smoothness*: Given $x,y \in \mathbb{R}^d$ and a representation function $f(.)$ defined as: $f : \mathbb{R}^d \rightarrow \mathbb{R}^m$, where $m < d$, a smooth representation implies that if $x \approx y$ then $f(x) \approx f(y)$. In a geometric point of view using distances this translates to: if $dist(x_1,x_2) < dist(x_1,x_3)$ then $dist(f(x_1),f(x_2)) < dist(f(x_1),f(x_3))$.
- *Sparsity* & *Invariance*: for any given observation in x, only a small fraction of the possible factors are relevant. In terms of representation, this could be represented by features that are often zero or by the fact that most of the extracted features are insensitive to small variations of x. For our case, this can be achieved through sparse autoencoders [20] which is a sort of autoencoder that uses sparsity to create a bottleneck in the flow of information. In particular, the loss function is designed to penalize the activation generated by the layer. $L1$ regularization is usually used to apply the sparsity constraint.

C. PRIVACY ENHANCEMENT WITH DEEP LEARNING

This work is licensed under a Creative Commons Attribution 4.0 License. For more information, see https://creativecommons.org/licenses/by/4.0/

This article has been accepted for publication in IEEE Access. This is the author's version which has not been fully edited and content may change prior to final publication. Citation information: DOI 10.1109/ACCESS.2024.3603429

Linking deep learning training concepts for the purpose of ppML has been addressed before. Adversarial learning is the most frequent way to handle privacy-utility trade-off where the privacy variable is explicitly introduced in the adversarial objective. UAE-PUPET was presented by [21] where an autoencoder takes an input x and generates $\hat{x}$ being a distorted version of x that contains minimum information of a given private attribute x_p while always keeping the most important information of the targeted utility variable x_u. UAEPUPET works by linking 2 classifiers to the autoencoder γ_u, γ_p responsible for predicting the utility and private attributes, respectively, then adversarialy minimizing L_u and maximizing L_p, while added to the original reconstruction loss. However, such methods based on adversarial learning [21], [22] require to choose only one privacy variable at a time which is not always possible, in addition the authors did not run a clear threat analysis through analyzing how a harmful attack such as model inversion might be applied against the generated $\hat{x}$. [23] proposed an adversarial reconstruction learning framework that prevents the latent representations to decode into the original input data. In other words, this time the reconstruction loss is directly maximized while minimizing the utility prediction error. Even though such a method allowed to empirically reduce the effectiveness of a model inversion attack, it is theoretically still possible and not inevitable. In addition the authors also noted that adversaries may still be able to exploit private meta information, such as determining the ethnicity of an individual based on skin color presented in reconstructed images, despite the fact that the images are not identical to the input.

Training a model M with generated synthetic data is another ppML with deep learning approach. Previous works were performed to train Generative Adversarial Neural networks (GANs) using differential privacy DP-GAN [24]–[26] or differential private diffusion models [27]–[29] . Yet, DP leads to the injection of noise in the generated data, which might reduce the model's performance especially for complex data like in genomics, where the data suffers from the curse of dimensionality, and where one single gene can decide the main task's outcome, DP might result in a further performance loss [30]–[32].

The use of dataset condensation into the domain of ppML was first introduced by [33]. Data condensation [34] works by generating synthetic data through condensing the larger original data points into a smaller subset. It allows a dataefficient learning since the synthetic data are created by first randomly initializing them, afterwards two neural networks are trained where one is linked to the original data T and the other to the synthetic data S and then the latter is updated iteratively by back-propagating the loss in a way that both networks share the same weights. It was theoretically proven by [33] that dataset condensation is similar to differential privacy from the perspective that one sample has limited effect over the parameter distribution of a network. Then, they empirically showed that in addition to keeping good performance, a model trained with the synthetic data was also more robust towards membership inference attacks. However, such a method does present some limitations. First, the membership inference risk was still present even though it was decreased. In fact, the authors even found out that in the case of FashionMNIST the membership attack was more effective on the model trained with synthetic data S than on its original counterpart due to the greyscale nature of the image, assuming that the synthetic data might contain more features prone to be memorized. Furthermore, dataset condensation initially requires a large amount of data, which excludes databases with few samples.

III. FRAMEWORK ARCHITECTURE & METHODOLOGY

We summarize the main components taking part in our encoding framework in Figure 1 while comparing it to the baseline presented by [13]. In this section of the paper, we will explain step by step each building block of our encoding framework.

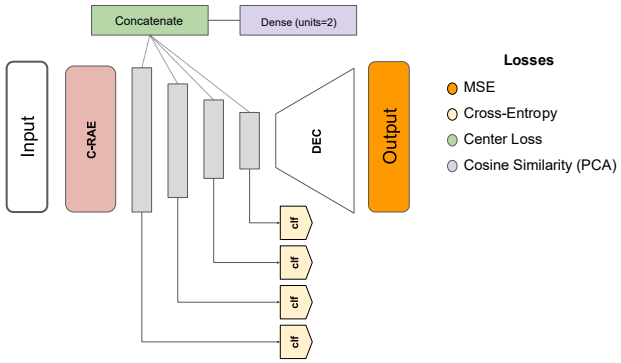

(a) Summary architecture of our proposed encoding framework (for images)

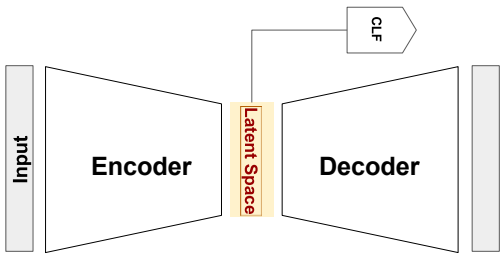

(b) Baseline architecture proposed by [13]

FIGURE 1: Suggested Framework vs Baseline

A. SUPERVISED RESIDUAL AUTOENCODER

This work is licensed under a Creative Commons Attribution 4.0 License. For more information, see https://creativecommons.org/licenses/by/4.0/

This article has been accepted for publication in IEEE Access. This is the author's version which has not been fully edited and content may change prior to final publication. Citation information: DOI 10.1109/ACCESS.2024.3603429

Ensuring the stability of the training in a neural network raises of hidden layers to be used. It was shown by [35] that residual autoencoders (RAE) performed well and in a stable manner while ranging the number of repeated layers from 2 to 90 on MNIST, FashionMNIST and CIFAR. For this stability purpose, we decided to use the residual autoencoder as the main backbone of our encoding framework. By extension, we used a Convolution-RAE (C-RAE) when encoding images (Figure 2). Then every layer in the encoder including the latent space is forwarded in parallel to a classifier. Formally, given

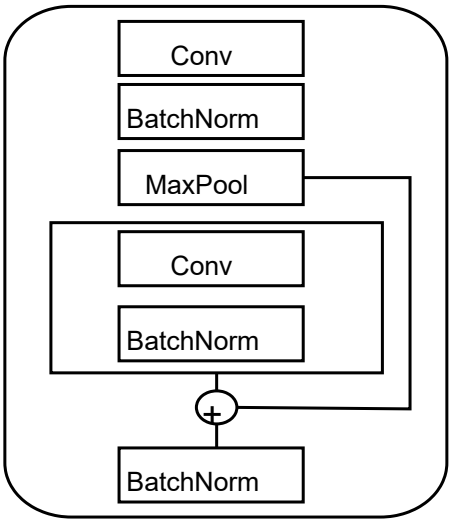

FIGURE 2: Building block of the Convolution Residual Autoencoder (C-RAE) in the encoder part $E(.)$

a sample (x_i, y_i), each representation $\psi_i^{(j)} \in \mathbb{R}^{e_j}$ of the j-th layer in the encoder, with $e_l < e_{j+1} < e_j < d$ and d, e_l being the respective dimensions of the input data and the latent space ($e_l < d$), is separately fed into a feed-forward network classifier $f_j(\cdot)$ to perform the original classification task assigned to it $\hat{y}_{i,j} = f_{i,j}(\psi_i^{(j)}, \theta_j), \hat{y}_{i,j} \in C$.

B. APPLICATION FLOW

In this section, we explain the application pipeline of our encoding framework in both unimodal and multimodal schemes.

1) Unimodal Setting

After training the supervised residual autoencoder (SRAE) of our framework on a dataset $\{x_i, y_i\}$, we use the encoder part of it to compute different representations of a given sample x_i until the layer producing the latent space as defined in the previous section. The final encoding ψ_i for a given sample x_i that will be shared is defined as the concatenation of those representations (Equation 2).

$$\psi_i = [\psi_{i(1)}^{\intercal}, \psi_{i(2)}^{\intercal}, \ldots, \psi_{i(l)}^{\intercal}]^{\intercal} \quad (2)$$

with $\psi_i^{(j)} \in \mathbb{R}^{e_j}$ and $\psi_i \in \mathbb{R}^{\sum_{j=1}^{l} e_j}$. The encoding of the whole dataset Ψ is defined as $\Psi = \{\psi_i\}$. In Figure 3, we illustrate how the encoding pipeline is generated by our proposed framework for a unimodal scenario.

We would like to highlight and point out that in the unimodal

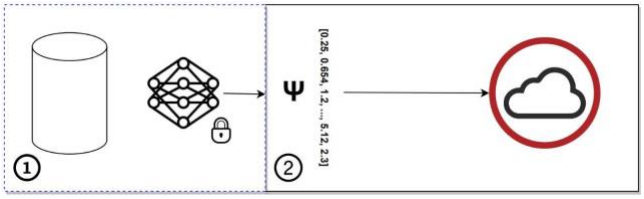

FIGURE 3: Execution flow of our ppML encoding framework on unimodal data, in ①, our supervised residual autoencoder is trained in-house on the original data, then ②, the generated concatenated encoding Ψ will be sent and shared with another party (for example: cloud) for the purpose of performing a heavy hyper-parameters tuning and further computationally expensive experiments.

setting our encoding framework is helpful, when further computational power from external resources is required, for instance to evaluate different hyperparameter settings and combinations and/or the use of complex ensemble and mixture of experts models. In other words, the trained residual autoencoder is kept in-house and only the encoded data is shared with the server providing the compute resources allowing us to benefit from cloud services without being under the threat of revealing our original data x. Our framework can also be leveraged to permit other institutions, when requested, to benefit from the inference of our model by sharing with them both the encoder $E(.)$ and the final model trained on the cloud M_{Ψ}.

2) Multimodal Setting

In this section of the paper we explain how to extend the utility of our framework in a multimodal use case. Let us consider a multimodal dataset consisting of m modalities $\{x_i^{(m)}, y_i\}$ and distributed in a vertical setting over m data providers where basically each modality is stored in a data supplier. For this

This work is licensed under a Creative Commons Attribution 4.0 License. For more information, see https://creativecommons.org/licenses/by/4.0/

This article has been accepted for publication in IEEE Access. This is the author's version which has not been fully edited and content may change prior to final publication. Citation information: DOI 10.1109/ACCESS.2024.3603429

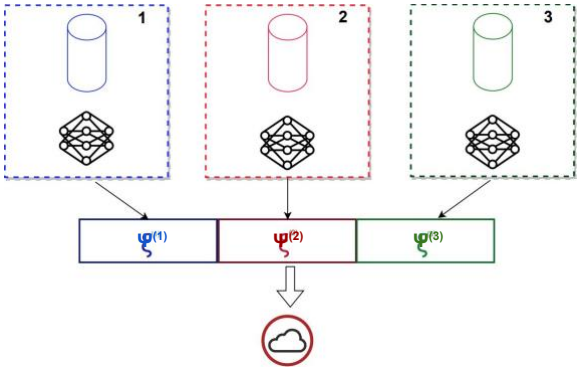

FIGURE4:ExecutionflowwhenapplyingourppMLencoding framework on a multimodal use case with vertically distributed data

specific scenario, the adopted strategy works by training a supervised residual autoencoder on every modality separately at the data provider. Each one then sends in parallel its final encoding $\Psi^{(m)}$ to a third party system to perform a cooperative training (Figure 4). Such a workflow permits mutual work between various providers by sending good representations of the input thus not hurting the performance and in the same time guaranteeing total privacy of the data since no information about the original data format or properties are revealed including the original shape, the distribution, the type of modality (image, sound, tabular...) and if the datatype is homogeneous (only numerical, only categorical) or heterogeneous.

For the sake of a better understanding of how the proposed encoding framework can be applied in a multimodal scenario, we consider the following illustrative example. In the healthcare domain, 3 clinics are collaboratively working together to diagnose a given patient P_j with a certain pathology H_k. Each clinic is responsible for delivering specific information about the patient P_j. For instance one presents the X-ray image, the second delivers the IRM image and the last one shares the electronic health record (EHR). Our framework allows the 3 institutions to collectively train a model responsible for detecting a pathology H_k and to infer if patient P_j suffers form it, all that without revealing the true format of the data to other parties in a way that clinic 2 and 3 are not able to know the original content of the X-ray image stored in clinic 1.

C. MULTI-OBJECTIVE PARADIGM

Our model, as previously mentioned, is trained to solve multiple tasks simultaneously. In addition to considering both the data reconstruction and classification problems in parallel, two other tasks within the sphere of representation learning are taken into account by the model.

1) Center Loss

In order to ensure that the layers' concatenation which will be shared by our framework has a widely class-separated structure to maximize the distance from decision boundaries we introduced a center loss on the concatenation layer. Center loss was presented by [36] and defined in Equation 3, where $c_{y_i} \in \mathbb{R}^d$ denotes the y_i-th class center. It aims to minimize the intra-class distance.

$$L_c = \sum_{i=1}^{n} ||x_i - c_{y_i}||_2^2 \tag{3}$$

2) Cosine Similarity with PCA

Explicitly introducing an alignment mechanism in our representation is of crucial importance. For this purpose, we decided to use a cosine similarity loss function to explicitly make the learning of the representation aligned with the PCA of the original data, as PCA is a well accepted technique for dimensionality reduction.

In the same network, we connect the concatenation layer, where the center loss is already applied (subsubsection III-C1), toadenselayerof2unitsandminimizethefollowingfunction:

$$L_{pca}(4) = \sum_{i=1}^{n} 1 - \frac{f_2(\psi_i) \cdot x_i^{pca}}{\|f_2(\psi_i)\| \|x_i^{pca}\|}$$

and $f_2(.)$ defined as $f_2 : \mathbb{R}^{\sum_{j=1}^{l} e_j} \rightarrow \mathbb{R}^2$ and x_i^{pca} being the 2-d PCA of the sample x_i.

IV. DATASETS

We will now list the set of datasets we experimented on to evaluate the efficiency of our encoding framework in terms of optimizing the performance-privacy trade-off. We went beyond using only standard benchmark datasets by also including data characterized with real life constraints as data imbalance and limited number of data points with number of features exceeding the number of samples.

A. UNIMODAL DATASET

1) Image Data

- **MNIST** [37] is considered a benchmark for image classification and includes grey scale images of digits.
- **FashionMNIST** [38] is a benchmark dataset for machine learning similar to MNIST, but is by nature more complex since the task is to identify 10 types of fashion articles including shoes, shirts and bags.

This work is licensed under a Creative Commons Attribution 4.0 License. For more information, see https://creativecommons.org/licenses/by/4.0/

This article has been accepted for publication in IEEE Access. This is the author's version which has not been fully edited and content may change prior to final publication. Citation information: DOI 10.1109/ACCESS.2024.3603429

- **Retinal Optical Coherence Tomography** (OCT) is an imaging technique used to capture high-resolution cross sections of the retinas. The dataset presented by [39] is comprised of 84 495 retina images with 4 classes: Normal, Diabetic Macular Edema, Drusen and Choroidal Neovascularization.

2) Tabular Data

- **Leukemia**: this tabular dataset comes from the Curated Microarray Database [40], which is a repository containing 78 handpicked cancer microarray datasets, extensively curated from 30 000 studies from the Gene Expression Omnibus (GEO), solely for machine learning. For our study, we experimented on the leukemia dataset which contains 281 samples with 22 284 gene expression values with the task of classifying 7 types of leukemic cancer. Microarray data include risks from re-identification, inference of sensitive traits, and linkage attacks [41], [42], which make them privacy-sensitive and important to protect.

B. MULTIMODAL DATASET

- **TCGA Breast Information Core** is a multi-omics dataset for breast cancer. Different types of highthroughput sequencing methods used parameters of DNA genome sequence, RNA expression and DNA methylation. Each datatype is labeled with the term "omics" (genomics, transcriptomics and methylomics respectively for our case). This dataset was leveraged by [43]–[45] to perform and experiment on multi-omics and multi-view clustering methods. However, since the current version of our representation-oriented encoding framework is specific to supervised learning use cases, we applied it to predict the survival status of patients. Multi-omics data have high privacy value because they include many personal attributes and trait-related features, making them especially sensitive to privacy issues [46]–[48].

V. EXPERIMENTS & EVALUATION

In this section, we present experiments conducted to compare the performance of training models on the encoded data against models directly trained on the original data or trained only on the latent space embedding [13].

A. MODEL PARAMETERS

Details about the type, number and hyperparameters of the layers composing the residual autoencoder in our framework are presented in Appendix A. Hardware specifications are presented in Appendix B.

B. EXPERIMENTAL SETUP

For every dataset, we trained the residual autoencoder of our encoding framework on the train set, then obtained the concatenated encoding Ψ^{train} and Ψ^{test} for the train and test sets, respectively. We then trained a set of machine learning models (KNN, SVM, Random Forests, Multi-Layer Perceptron) in a randomized grid search manner (Appendix C) on the original data x^{train}, the latent space embedding only (baseline) and on our encoded data Ψ^{train} and compared the performance metrics on the respective test points. The selection of K-Nearest Neighbors (KNN), Support Vector Machines (SVM), Random Forests, and Multi-Layer Perceptrons (MLP) as classifiers in our study is motivated by their distinct characteristics and strengths in downstream classification tasks giving a diversity of choice knowing that each one has its own learning paradigm and structure. In addition, they are prevalent in the field of machine learning

TABLE 1: Macro F1-Score performance with Randomized Grid Search training in a 10-fold stratified cross-validation between using the original data (Org) vs Data shared as the latent space only being the baseline, (BASE, [13]) vs the encoded data produced from our suggested ppML framework (Enc)

	Leukemia			TCGA		
	Org	Base	Enc	Org	Base	Enc
KNN	*61.84 ±5.18*	*77.71 ±7.57*	**82.57 ±5.01**	*60.11 ±5.65*	*59.10 ±4.56*	**60.77 ±5.97**
SVM	**83.79 ±5.66**	*78.81 ±5.17*	*80.52 ±5.85*	*33.96 ±3.20*	*59.62 ±5.12*	**62.62 ±3.61**
RF	*78.70 ±2.80*	*78.59 ± 5.91*	**83.69 ±4.30**	*61.96 ±6.47*	*59.64 ±4.38*	**63.96 ±4.16**
MLP	*82.06 ±4.34*	*80.36 ± 5.51*	**83.96 ±3.17**	*59.74 ±4.64*	*60.27 ± 5.96*	**62.79 ±3.33**

Dataset	KNN-BASE	KNN-ENC	SVM-BASE	SVM-ENC	RF-BASE	RF-ENC	MLP-BASE	MLP-ENC	ResNet50-ORG
MNIST	*99.44 ± 0.05*	*99.40 ±0.02*	**99.47 ± 0.06**	*99.44 ±0.02*	*99.44 ± 0.06*	*99.43 ±0.03*	*99.44 ± 0.05*	*99.41 ±0.06*	*99.31 ±0.08*
Fashion	*92.34 ± 0.17*	*92.29 ±0.22*	*92.25 ± 0.16*	**92.58 ±0.22**	*92.34 ± 0.16*	*92.44 ±0.21*	*92.40 ± 0.16*	*92.13 ±0.18*	*91.21 ±0.33*
OCT	*98.33 ± 1.45*	*98.43 ±0.26*	*97.68 ± 1.91*	*98.56 ±0.22*	*99.02 ± 0.45*	**99.19 ±0.19**	*98.20 ± 1.42*	*98.58 ±0.14*	*97.01 ±1.28*

This work is licensed under a Creative Commons Attribution 4.0 License. For more information, see https://creativecommons.org/licenses/by/4.0/

This article has been accepted for publication in IEEE Access. This is the author's version which has not been fully edited and content may change prior to final publication. Citation information: DOI 10.1109/ACCESS.2024.3603429

research and present in multiple comparative studies [49]–[52].

For MNIST, FashionMNIST, and Retinal OCT since they are images we trained their original versions using a ResNet50. From Table 1 we can empirically observe that the average

TABLE 2: Comparison between the silhouette score applied on the final concatenated encoding of the test set to evaluate the effect of adding center loss.

Lc	**MNIST**	**Fashion**	**Leukemia**	**OCT**	**TCGA**
Without	**0.597**	*0.078*	*0.095*	**0.734**	*0.048*
With	*0.594*	**0.451**	**0.136**	*0.712*	**0.076**

macro F_1-score of models trained on the encoded data is most of the time better than for the other approaches.

We further explored the impact of the introduced center loss by comparing the silhouette score of the concatenated encoding Ψ with and without applying center loss. Prior to calculating the silhouette score we first reduce the concatenated encoding to 2 dimensions using t-SNE. As a reminder, silhouette score is a quantitative metric, which measures how good clusters are separated. Table 2 summarizes the silhouette score comparison between two versions of our framework (with/without center loss). We observe an increase of the silhouette score by 478%, 43%, and 57% for FashionMNIST, Leukemia, and TCGA, respectively after adding the center loss and a small decrease of 3% and 0.5% for MNIST and OCT. We notice the positive impact of the center loss in producing well seperated clusters especially for the more complicated prediction tasks.

We also applied an ablation study to check the impact of the introduced cosine similarity loss on PCA (Equation 4). For this case, we only took the best type of ML model per dataset while using the encoded data in Table 1. The results of this ablation study are presented in Table 3. We do observe that the introduction of the PCA loss contributed to an increase of the performance in all datasets except MNIST.

TABLE 3: For each dataset, we took the best model found in Table 1 based on our encoding framework and evaluated the effect of the PCA cosine similarity loss.

Lpca	**MNIST**$_{SVM}$	**Fashion**$_{SVM}$	**Leukemia**$_{MLP}$	**OCT**$_{RF}$	**TCGA**$_{RF}$
Without	**99.46 ±0.03**	*92.15 ±0.34*	*82.23 ±6.54*	*99.11 ±0.21*	*63.50 ±2.84*
With	*99.44 ±0.02*	**92.58 ±0.22**	**83.96 ±3.17**	**99.19±0.19**	**63.96±4.16**

VI. THREAT ANALYSIS

In our threat analysis, privacy is defined as the inability of an adversary to reconstruct the original training dataset from the shared latent representations or prediction outputs. Thus, the main aim here is to protect our training data x^{train} to be recreated from model inversion attack. In our solution, we consider four different actors: data owner(s), cloud server, usershavingaccesstoinferenceservicesandinstitutionswhere encoder $E(.)$ and final model M_Ψ are shared. We assume that the cloud server, users, and institutions are honest but curious, meaning they are expected to follow the protocol. The main goal of the adversary corrupting these actors is to attempt to infer sensitive information about the original training samples by using their observations of the protocol execution. The view of the adversary A corrupting the cloud consists of the encoded samples of the data owner(s) and the trained model on these samples. Since the adversary A has no knowledge about the utilized encoder by the data owner(s), it cannot return back to the original samples from the encoded samples. For instance, the adversary A knows neither the dimensionality nor the type of the original data. In addition to the protection of the privacy of the samples, our framework preserves the privacy of the model implicitly as well. Although the adversary A has access to the trained classifier model in plaintext, it has no use unless the adversary has access to the encoder. Therefore, we can conclude that our proposed framework securely allows the outsourcing of the computation to a third party or enables the third party to benefit from the output of the model without compromising the privacy of the data or the model. The adversary A corrupting at least one user can perform predictions on the model M_Ψ for the encodings of given data. Through using the prediction service as an API , A has access only to the final predictions y_{new}. Without knowledge of the encodings of the training samples and the encoder $E(.)$, it is not possible to extract the training samples. A might still perform membership inference attacks which is a common problem for all machine learning models trained without differential privacy. Our solution does not aim to address these weaknesses. The adversary, A, who has compromised at least one institution, can access both the encoder $E(.)$ and the model M_Ψ. A can use $E(.)$ to encode new data, and then use the encodings to make predictions using M_Ψ, resulting in (Ψ, y_Ψ). Without the encodings of the original training samples, it is impossible to extract the training data. A can also perform attacks like model inversion and membership inference. However, as we mentioned, we do not present a solution to counteract these types of attacks in this article.

The adversary A, who has compromised at least one institution and the cloud server, can access the encoder $E(.)$

This work is licensed under a Creative Commons Attribution 4.0 License. For more information, see https://creativecommons.org/licenses/by/4.0/

This article has been accepted for publication in IEEE Access. This is the author's version which has not been fully edited and content may change prior to final publication. Citation information: DOI 10.1109/ACCESS.2024.3603429

and the encodings of the original training samples. In this scenario, A can train the decoder $D_{inv}(.)$ by using the data of compromised institution and the encoder $E(.)$ to reconstruct the original training samples. Therefore, in our security model, we assume that the cloud server and institutions do not collude. This assumption is practical in real-world scenarios. Data owners can conceal their identities from the cloud server, making it difficult to determine with whom the model trained by the cloud server is shared. The four scenarios described in our threat analysis are illustrated in Figure 5.

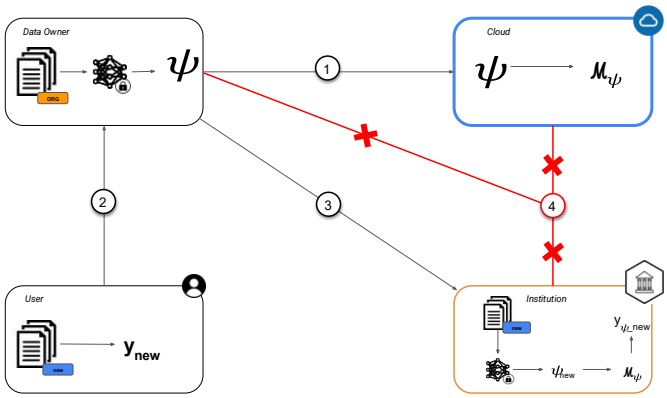

FIGURE 5: This figure summarizes the threat analysis schema with the four actors taking part in it. ⓝ$_1$ the adversary corrupts the cloud, ⓝ$_2$ the adversary corrupts a user, ⓝ$_3$ the adversary will have an access to one of the institutions and in ◯$_4$ the adversary will corrupt both the cloud and one of the institutions. It is only in the latter scenario where the risk of inverting the original data might occur since the adversary will have access to the encoder $E(.)$ and the encoding of the original training samples Ψ thus a decoder $D_{inv}(.)$ can be trained on the pair of the institute data to perform an inversion attack on Ψ.

VII. LIMITATIONS OF THE PROPOSED FRAMEWORK

Even though our encoding framework showed great performance-privacy results, it is for now still constrained to specific scenarios. Our framework is task-oriented which means that it requires the presence of a supervision task that guides our autoencoder for presenting a meaningful mapping. However, it is known within the ML community that most datasets do lack annotation [53]–[55] which currently excludes our proposed ppML encoding technique to be leveraged for unsupervised use cases. A direction that might be explored to make our method less dependent on supervised learning cases is to include self-supervised learning in the process, since it is a training paradigm which aims to create subtasks from the dataset structure and train the model to solve it so instead of depending on explicitly labeled datasets, selfsupervised models extract meaningful representations by designing pretext auxiliary problems that allow the model to predict parts of the data from other parts. In addition self-supervised learning is the core of training foundation models which makes it a good alternative than relying only on supervised datasets.

In addition, our model is not generic towards all types of data training distributions, in fact, our current framework is applicable only if the data is vertically split among input parties where they share the same sample ID but different feature spaces, like in the multimodal example used in our experiments, which excludes (for now) horizontal federated learning [56].

Regarding computational overhead, the incorporation of the proposed components increases the training and inference complexity by a factor of approximately 2× to 5× compared to the baseline model (Table 4). The inference time includes obtaining the encoding for both the training and testing datasets. This increase, while non-trivial, remains highly feasible within typical computational budgets. In contrast, training neural networks using homomorphic encryption (HE) introduces substantial computational challenges. HE operates on encrypted data without decrypting it, which requires arithmetic operations over ciphertexts instead of plaintexts. These operations are inherently more complex, often resulting in computational overheads that are several orders of magnitude higher than standard training [57]–[59]. In comparison, the computational cost introduced by our method is modest and well within acceptable bounds for practical deployment.

Dataset (Method)	Training Time (s)	Inference Time (s)
MNIST (Baseline)	324.72	4.15
MNIST (Our Method)	1478.39	12.98
ashion (Baseline)	218.32	3.97
ashion (Our Method)	1109.70	15.38
eukemia (Baseline)	81.36	0.60
eukemia (Our Method)	163.73	0.65
TCGA (Baseline)	76.72	3.70
TCGA (Our Method)	314.83	11.06

TABLE 4: Comparison of Training and Inference Times for Baseline and Our Method Across Datasets

VIII. CONCLUSION & FUTURE WORKS

In this study, we introduced an encoding strategy powered by representation learning leveraged for privacy purposes. The main goal and motivation behind implementing such a framework are to take advantage of discriminative representations learned in the hidden layers in the encoder

This work is licensed under a Creative Commons Attribution 4.0 License. For more information, see https://creativecommons.org/licenses/by/4.0/

This article has been accepted for publication in IEEE Access. This is the author's version which has not been fully edited and content may change prior to final publication. Citation information: DOI 10.1109/ACCESS.2024.3603429

part and take their concatenation as the encoding to be shared with other parties. To achieve this, we implemented a supervised residual autoencoder trained to consider both data reconstruction and an assigned classification task. To ensure a good representation we strengthened the training with two introduced losses one being the center loss applied on the concatenated encoding and a cosine similarity loss used to force the concatenation in having the same direction as the original input. We further presented the application workflow of our framework in a unimodal and multimodal settings. Our framework allows us to benefit from external computational resources to perform training on the encoded data in a secure fashion since no information about the data is being revealed. As future work, we look forward to expanding the domain application of our encoding framework by including unlabeled datasets and horizontally distributed data for federated learning.

APPENDIX A MODELS DETAILS

We present here more details about the type, number and hyperparameters of the layers composing the residual autoencoder in our framework. As previously mentioned in Section III-A, two versions of supervised residual autoencoders were used in our experiments. If the modality is of type image then convolution layers are included and we name it as C-SRAE. Otherwise we only include dense layers under the name SRAE. The latter is applied for the leukemia and TCGA datasets both being in a tabular format. C-SRAE is also presented in two different formats, a light version for small image input data as MNIST and FashionMNIST, and another for bigger image sizes as OCT with more convolution layers added. Fig 6 presents more details about the three architectural types. However, for more uniformity the final encoding Ψ has the same shape $(N,480)$ across the three presented versions. We also applied $L1/L2$ kernel regularization on every layer for better generalizability and $L1$ activity regularization on the dense layers taking part in the final concatenated encoding Ψ to ensure a proper invariant representation. We used *Adam* as the optimizer and we monitored the training with an *Early Stopping* callback on the validation loss.

APPENDIX B SYSTEM COMPONENTS

Here we provide details about the hardware parts constituting our system.

TABLE 5: Hardware Specifications

Parameter	Technical Specifications
Memory	32 GiB
Processor	11th Gen Intel® Core™ i7-11800H
No CPU Cores	16
CPU Frequency	2.30 GHz
GPU	Nvidia RTX A2000 Mobile

APPENDIX C TRAINING DETAILS

Here we provide more details about the set of hyperparameters related to the machine learning models used in our experiments and that were explored through a randomized grid search. The models and grid search were implemented using Sklearn library.

TABLE 6: Hyperparameters for Randomized Grid Search

ML	Hyperparameters
KNN	{"n_neighbors": [i for i in range(2,10)]}
SVC	{"C": [10**i for i in range(-4, 2)]}
Random Forest	{"n_estimators":[100,200,300], "max_depth":[10, 50, 100, 200, 300] , "min_samples_leaf": [1,3,4,5,6,7], "criterion": ["gini", "entropy"], "class_weight":["balanced"]}
Multilayer Perceptron	{"hidden_layer_sizes": [(10,30,10),(20,),(100,)], "activation": ["tanh", "relu"], "solver": ["sgd", "adam"], "alpha": [0.0001, 0.05], "learning_rate": ["constant","adaptive"]}

For training the residual autoencoders we used the deep learning libraries Tensorflow 2.5.0 and Keras 2.0.

REFERENCES

[1] L. Demelius, R. Kern, and A. Trügler, "Recent advances of differential privacy in centralized deep learning," arXiv preprint arXiv:2309.16398, Sep. 2023.

[2] T. Bonaci, "Privacy-preserving machine learning syllabus," Univ. Washington ECE, Seattle, WA, 2023.

[3] SSRN, "Privacy Preserving Machine Learning Tutorial," SSRN Electronic Journal, Sep. 2023.

[4] Z. Liu, W. Zhang, and S. Chen, "Preserving data privacy in machine learning systems," Comput. Secur., vol. 128, p. 102657, Aug. 2023. [Online]. Available: https://www.sciencedirect.com/science/article/pii/S0167404823005151

[5] J. D. Clark and V. E. Smith, "GuardML: Efficient privacy-preserving machine learning services," in Proc. ACM Int. Conf. on Data Engineering (ICDE), May 2024.

[6] J. Ma, L. Tang, and T. Wang, "Differential privacy in deep learning: Privacy and beyond," Future Gener. Comput. Syst., vol. 144, pp. 946-959, Feb. 2023.

[7] J. Ma, W. Zhang, and T. Lee, "Homomorphic encryption for IIoT privacy protection," J. Biomed. Secur., vol. 17, no. 3, p. PMC9921397, Jan. 2023.

[8] K. Zhang, Y. Li, and H. Zhou, "DeepPAR: Proxy re-encryption for privacy-preserving deep learning," J. Biomed. Secur., vol. 17, no. 3, Jan. 2023.

[9] W. Lin and J. He, "DeepDPA: Key management for privacy in deep learning," J. Biomed. Secur., vol. 17, no. 3, Jan. 2023.

[10] L. Demelius et al., "Centralized differential privacy in deep learning—A systematic survey," arXiv preprint arXiv:2309.16398, Sep. 2023.

[11] X. Wang et al., "Differential privacy in deep learning: Issues and perspectives," Comput. Secur., vol. 128, p. 102657, Jan. 2023.

[12] F. Masoumzadeh et al., "Privacy guarantees in federated learning: An overview," Nature Mach. Intell., vol. 6, pp. 35-51, Sep. 2024.

[13] W. K. Chan and S. Lee, "Privacy-preserving multi-party machine learning," in Proc. 6th Deep Learning Security & Privacy Workshop (DLSP 2023), May 2023.

[14] M. Rossi and D. Choi, "Preserving privacy in healthcare: A systematic review of deep learning approaches," J. Biomed. Inform., vol. 156, p. 104567, Feb. 2023.

[15] S. Sharma, P. Kumar, and X. Yu, "Security and privacy challenges in deep learning models," arXiv preprint arXiv:2311.13744, Nov. 2023.

This work is licensed under a Creative Commons Attribution 4.0 License. For more information, see https://creativecommons.org/licenses/by/4.0/

This article has been accepted for publication in IEEE Access. This is the author's version which has not been fully edited and content may change prior to final publication. Citation information: DOI 10.1109/ACCESS.2024.3603429

[16] "The ML papers that rocked our world (2020–2023)," Reddit/r/MachineLearning, Sep. 2023.

[17] S. Liu, B. Zhang, and D. Guo, "Machine Learning with Applications," J. Mach. Learn. Appl., vol. 7, no. 2, pp. 145-155, Mar. 2023.

[18] J. Ma and Q. Liu, "Review of differential privacy in artificial intelligence," Future Gener. Comput. Syst., vol. 144, pp. 946-959, Jun. 2023.

[19] R. Smith et al., "Geospatial models & responsible AI," Nature Mach. Intell., vol. 6, pp. 72-81, Sep. 2024.

[20] F. Yang and H. Zhou, "Deep learning for cell mapping," Nature Mach. Intell., vol. 6, pp. 130-142, Nov. 2024.

[21] C. Lewis, "Algorithmic uniform approximation by neural networks," arXiv preprint arXiv:2309.16398, Sep. 2023.

[22] I. Kaur and S. Patel, "Semi-supervised Bayesian GANs for privacy," arXiv preprint arXiv:2309.16398, Sep. 2023.

[23] W. Chen and L. Park, "Hybrid topic-semantic labeling for legal docs," arXiv preprint arXiv:2309.16398, Sep. 2023.

[24] Z. Lee, "Lipschitz-guided design of interpolation schedules," arXiv preprint arXiv:2309.16398, Sep. 2023.

[25] Mehta, D. B. (2023). Privacy-Preserving Machine Learning Architecture for Cross-Channel Advertising Optimization in a Large-Scale Social Media Platform. International Journal of Communication Networks and Information Security, 15(8), 23–32. https://www.ijcnis.org/index.php/ijcnis/article/view/8396

[26] Cao, T., Bie, A., Vahdat, A., Fidler, S. and Kreis, K., 2021. Don't generate me: Training differentially private generative models with sinkhorn divergence. Advances in Neural Information Processing Systems, 34, pp.1248012492.

[27] Harder, F., Adamczewski, K. and Park, M., 2021, March. Dp-merf: Differentially private mean embeddings with random features for practical privacy-preserving data generation. In International conference on artificial intelligence and statistics (pp. 1819-1827). PMLR.

[28] Ji, T. and Li, P., 2024. Less is more: revisiting the Gaussian mechanism for differential privacy. In 33rd USENIX Security Symposium (USENIX Security 24) (pp. 937-954).

[29] Meisenbacher, S., Nandakumar, N., Klymenko, A. and Matthes, F., 2024. A comparative analysis of word-level metric differential privacy: Benchmarking the privacy-utility trade-off. arXiv preprint arXiv:2404.03324.

[30] Dong, T., Zhao, B. and Lyu, L., 2022, June. Privacy for free: How does dataset condensation help privacy?. In International Conference on Machine Learning (pp. 5378-5396). PMLR.

[31] Zhao, B., Mopuri, K.R. and Bilen, H., 2020. Dataset condensation with gradient matching. arXiv preprint arXiv:2006.05929.

[32] Wickramasinghe, C.S., Marino, D.L. and Manic, M., 2021. ResNet autoencoders for unsupervised feature learning from high-dimensional data: Deep models resistant to performance degradation. IEEE Access, 9, pp.4051140520.

[33] LeCun, Y., Bottou, L., Bengio, Y. and Haffner, P., 1998. Gradient-based learning applied to document recognition. Proceedings of the IEEE, 86(11), pp.2278-2324.

[34] Xiao, H., Rasul, K. and Vollgraf, R., 2017. Fashion-mnist: a novel image dataset for benchmarking machine learning algorithms. arXiv preprint arXiv:1708.07747.

[35] Feltes, B.C., Chandelier, E.B., Grisci, B.I. and Dorn, M., 2019. Cumida: An extensively curated microarray database for benchmarking and testing of machine learning approaches in cancer research. Journal of Computational Biology, 26(4), pp.376-386.

[36] Philibert, R.A., Terry, N., Erwin, C., Philibert, W.J., Beach, S.R. and Brody, G.H., 2014. Methylation array data can simultaneously identify individuals and convey protected health information: an unrecognized ethical concern. Clinical epigenetics, 6(1), p.28.

[37] Rappoport, N. and Shamir, R., 2018. Multi-omic and multi-view clustering algorithms: review and cancer benchmark. Nucleic acids research, 46(20), pp.10546-10562.

[38] Röder, B., Kersten, N., Herr, M., Speicher, N.K. and Pfeifer, N., 2019. webrMKL: a web server for dimensionality reduction and sample clustering of multi-view data based on unsupervised multiple kernel learning. Nucleic acids research, 47(W1), pp.W605-W609.

[39] Cantini, L., Zakeri, P., Hernandez, C., Naldi, A., Thieffry, D., Remy, E. and Baudot, A., 2021. Benchmarking joint multi-omics dimensionality reduction approaches for the study of cancer. Nature communications, 12(1), p.124.

[40] Oestreich, M., Chen, D., Schultze, J.L., Fritz, M. and Becker, M., 2021. Privacy considerations for sharing genomics data. EXCLI journal, 20, p.1243.

[41] Arshad, S., Arshad, J., Khan, M.M. and Parkinson, S., 2021. Analysis of security and privacy challenges for DNA-genomics applications and databases. Journal of Biomedical Informatics, 119, p.103815.

[42] Alsaffar, M.M., Hasan, M., McStay, G.P. and Sedky, M., 2022. Digital dna lifecycle security and privacy: an overview. Briefings in Bioinformatics, 23(2), p.bbab607.

[43] Boateng, E.Y., Otoo, J. and Abaye, D.A., 2020. Basic tenets of classification algorithms K-nearest-neighbor, support vector machine, random forest and neural network: A review. Journal of Data Analysis and Information Processing, 8(4), pp.341-357.

[44] Nugrahaeni, R.A. and Mutijarsa, K., 2016, August. Comparative analysis of machine learning KNN, SVM, and random forests algorithm for facial expression classification. In 2016 International Seminar on Application for Technology of Information and Communication (ISemantic) (pp. 163-168). IEEE.

[45]

[46] S. Wang, "Causal direction via dense functional classes," arXiv preprint arXiv:2309.16398, Sep. 2023.

[47] SSRN, "Machine learning under GDPR and security regulations," SSRN Electronic Journal, Sep. 2023.

[48] S. Evans et al., "Systematic review of medical data synthetic generation," J. Biomed. Inform., vol. 156, p. 104567, Feb. 2023.

[49] Xu, J., Zuo, W., Liang, S. and Zuo, X., 2020, December. A review of dataset and labeling methods for causality extraction. In Proceedings of the 28th International Conference on Computational Linguistics (pp. 1519-1531).

[50] Yang, Q., Liu, Y., Chen, T. and Tong, Y., 2019. Federated machine learning: Concept and applications. ACM Transactions on Intelligent Systems and Technology (TIST), 10(2), pp.1-19.

[51] Gilad-Bachrach, R., Dowlin, N., Laine, K., Lauter, K., Naehrig, M. and Wernsing, J., 2016, June. Cryptonets: Applying neural networks to encrypted data with high throughput and accuracy. In International conference on machine learning (pp. 201-210). PMLR.

[52] Zhang, Y., Zheng, M., Shang, Y., Chen, X. and Lou, Q., 2024. Heprune: Fast private training of deep neural networks with encrypted data pruning. Advances in Neural Information Processing Systems, 37, pp.51063-51084.

This work is licensed under a Creative Commons Attribution 4.0 License. For more information, see https://creativecommons.org/licenses/by/4.0/