# Project Portfolio

Vikram Bharadwaj

## Project 1 :ONERA M6 Shock Wave Simulation

Simulated shock wave phenomena at Mach 0.84 using ANSYS Fluent. Validated results against NASA data with 85% accuracy and improved solution precision by 3% using adaptive mesh refinement near shock regions.

## Mesh

The Initial Mesh consits of 294912 nodes. The mesh of the Onera M6 is shown below.

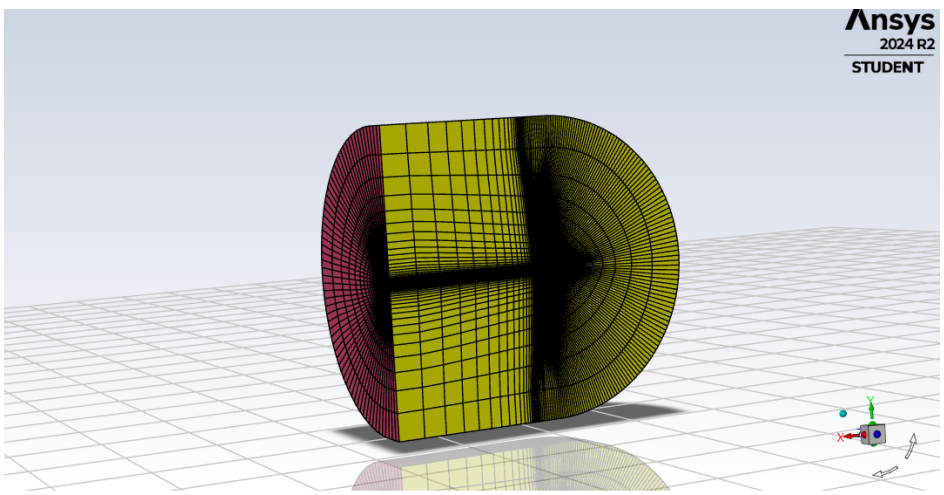


Figure 1: Mesh of Onera M6

## Contours

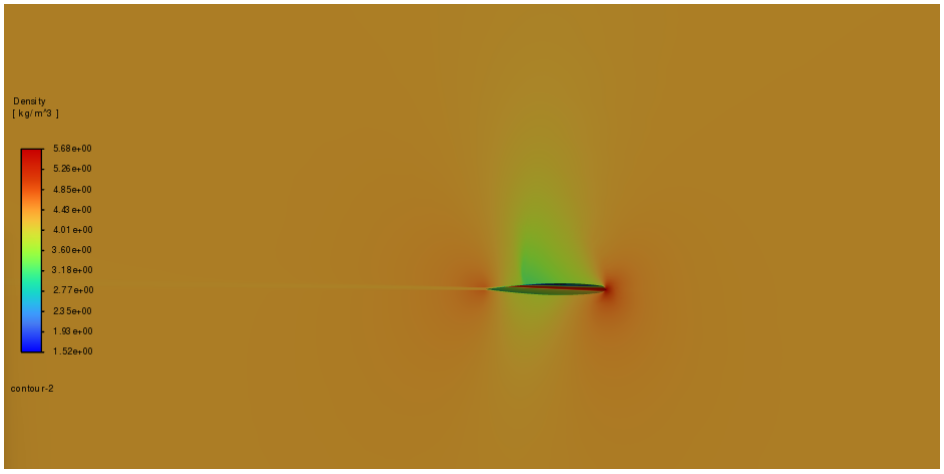


Figure 2: Density Contour

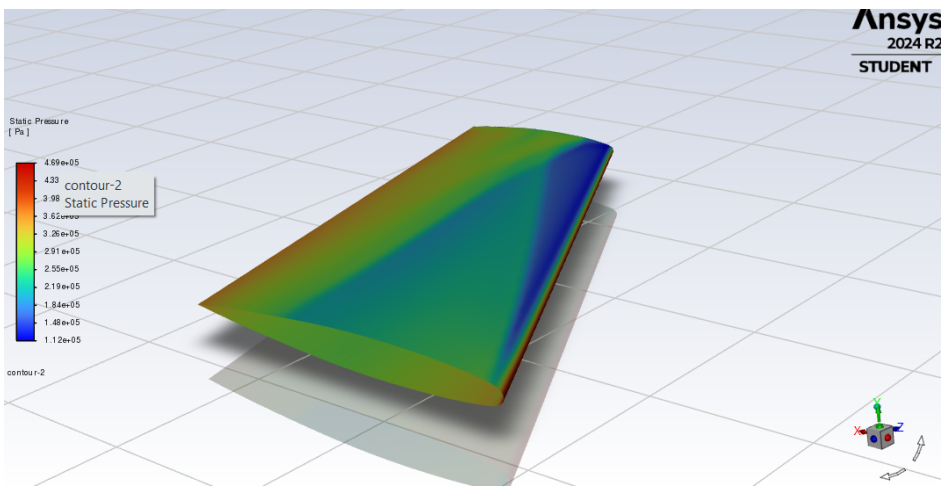


Figure 3: Pressure on wing

From the above image, we can observe high pressure at the leading edge of the wing, indicating that air molecules are accumulating at the front. This accumulation results in increased density at the leading edge. Additionally, there is a sudden decrease in pressure along the surface of the wing.

## 0.1 Mesh Refinment

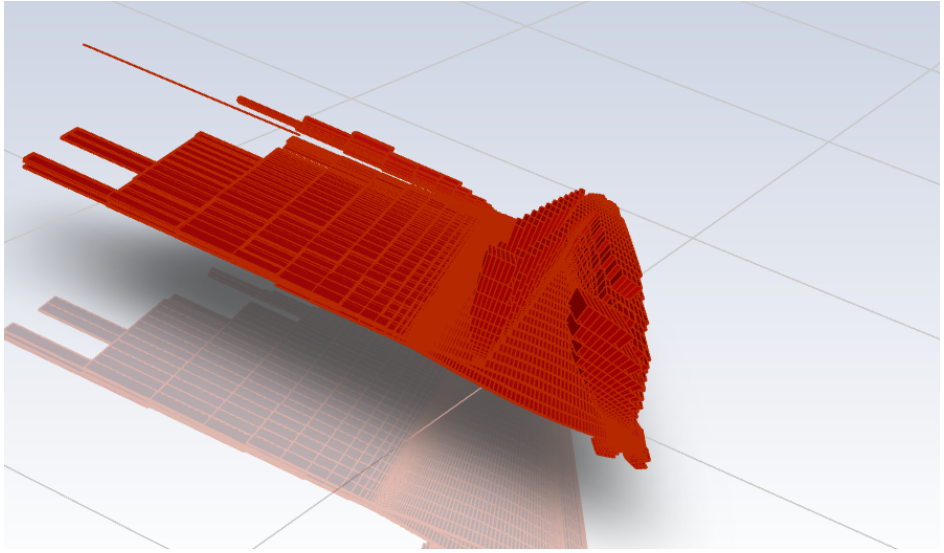

Figure 4: Mesh Refinment

The criterion for selecting cells is that their density must be greater than 0.5 for refining and less than 0.5 for coarsening.

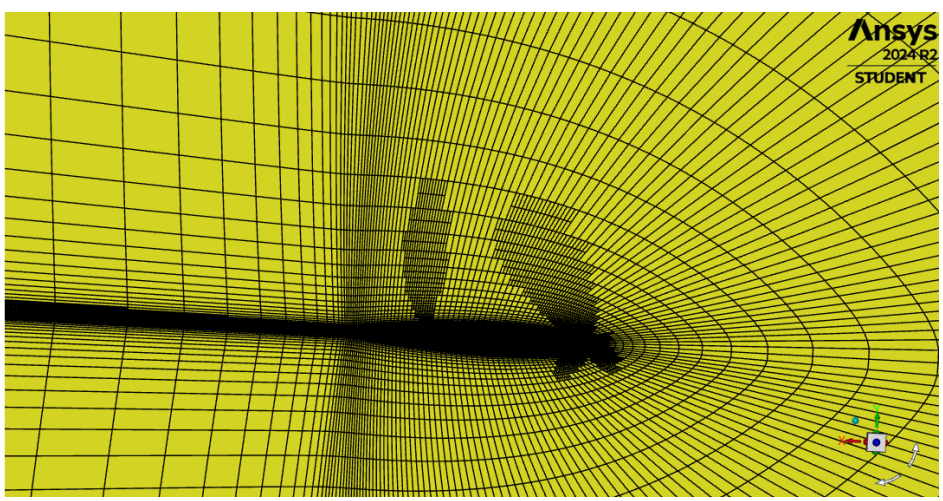


Figure 5: Refined Mesh

In the above image we can clearly see the refined mesh near the shock. which will accurately capture the posistion of the shock.

# Project 2 : 2D Linear Advection Solver

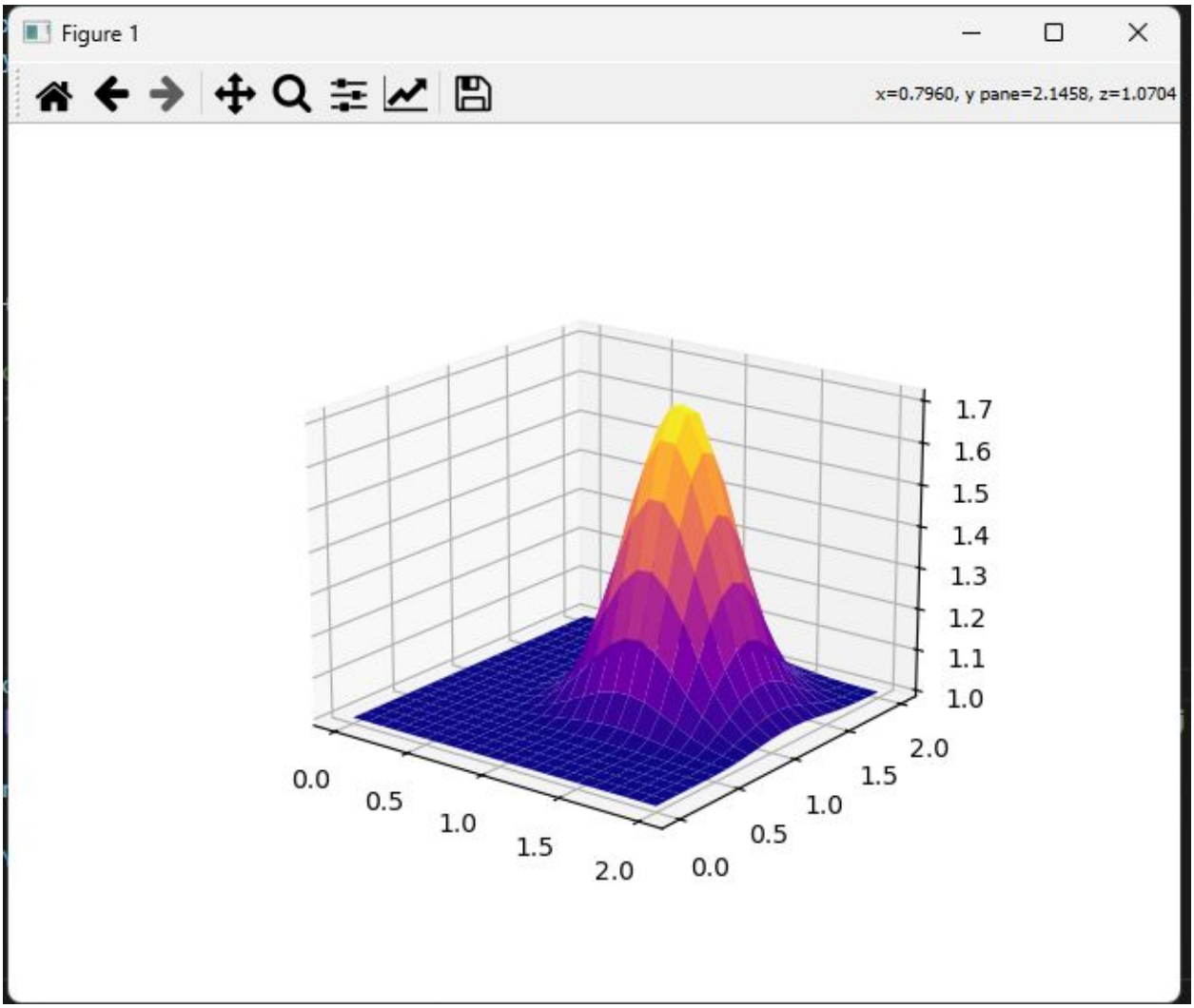


Figure 6: 2D Linear Advection Solver Output: Scalar Field Propagation over Time

The figure presents a 3D surface plot visualizing the numerical solution of a 2D linear advection equation. The solution, computed using a custom-built solver implemented in C++, shows the evolution of the scalar field over the spatial domain. The plot highlights the advected profile as it moves through the domain, demonstrating the solver's capability to capture the propagation of the initial condition without significant numerical diffusion or dispersion. The smooth and localized peak indicates accurate advection and stability of the numerical scheme employed.

# Project 2 : Preliminary Design of Embraer 195 Jet

Designed wing and fuselage for short-runway performance using LS(1)-0417 airfoil and high-lift devices. Conducted structural analysis in Abaqus under bending and internal pressure loads; achieved FOS of 2. Observed 15% lift increase due to ground effect during landing.

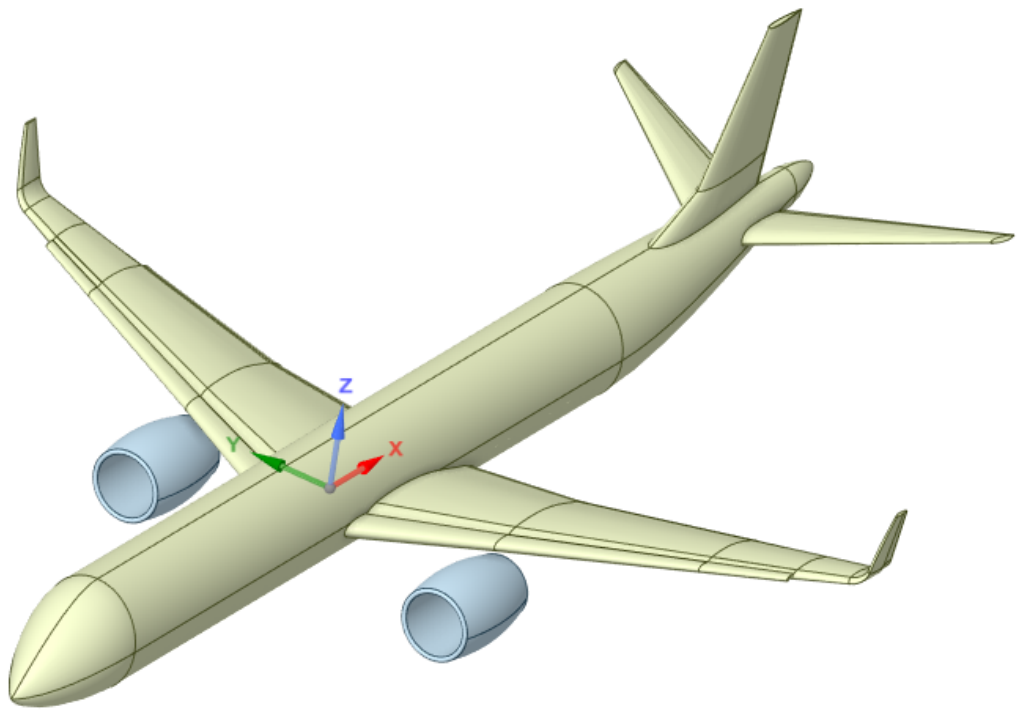


Figure 7: Embraer 195 Jet

# CFD Analysis

## Takeoff

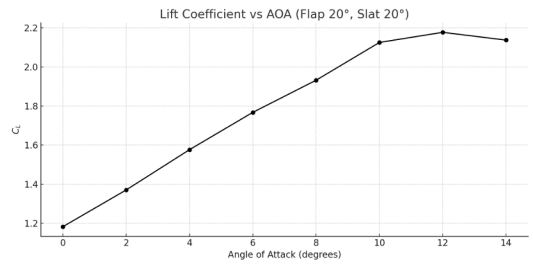


Figure 8: Lift Coefficient vs. Angle of Attack during Takeoff

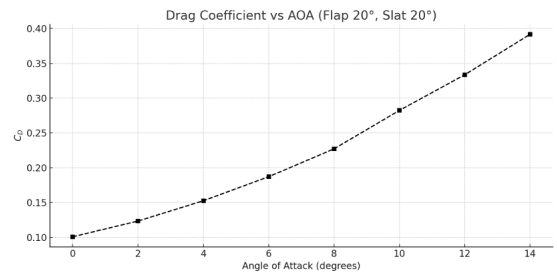


Figure 9: Drag Coefficient vs. Angle of Attack during Takeoff

## Landing

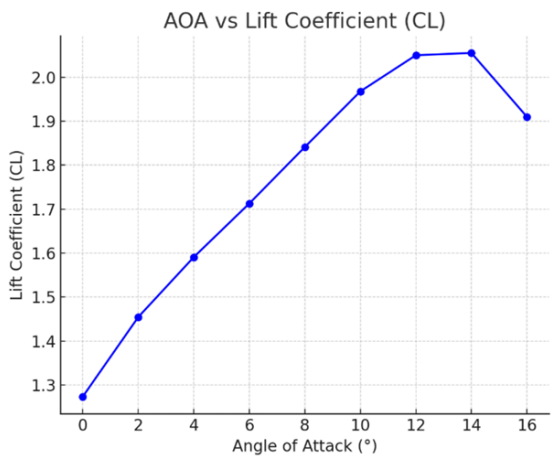


Figure 10: Lift Coefficient vs. Angle of Attack during Landing

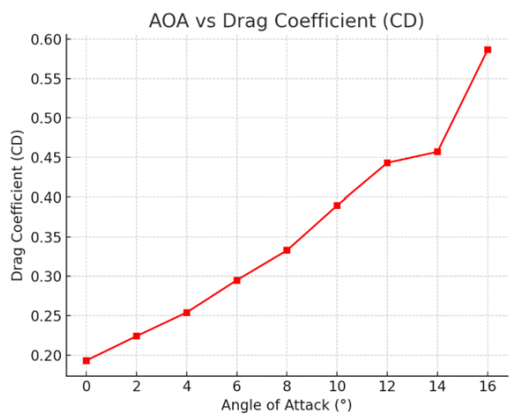


Figure 11: Drag Coefficient vs. Angle of Attack during Landing

## Contours

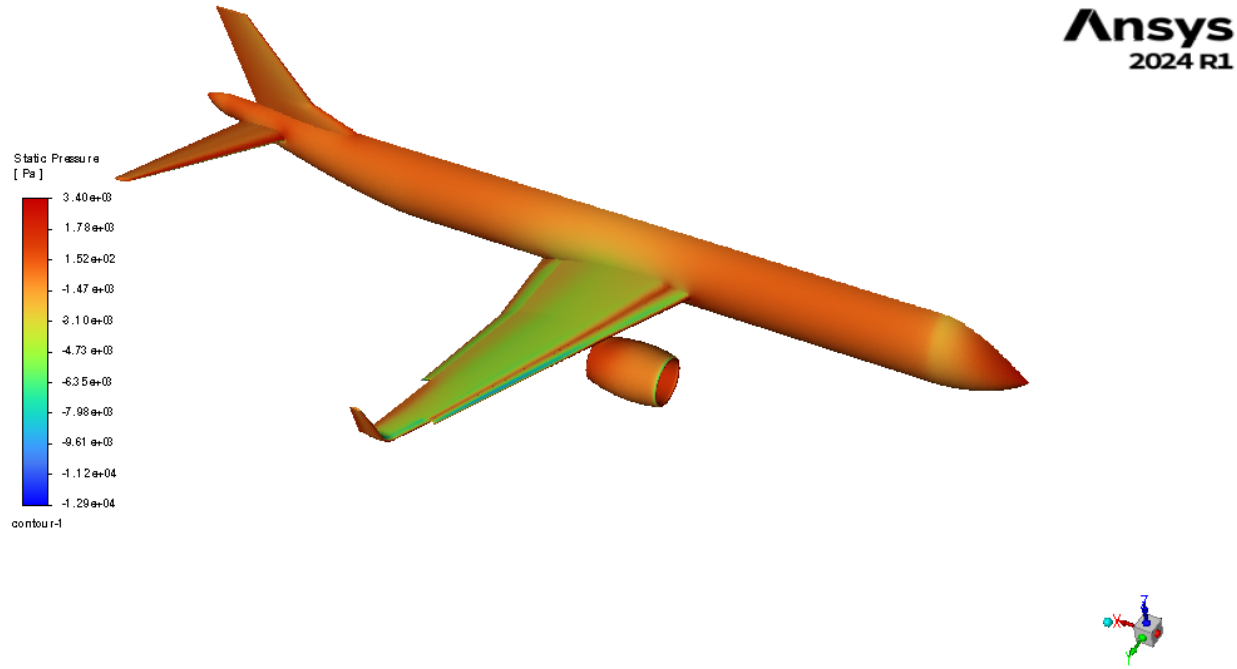


Figure 12: Pressure Contour while take off

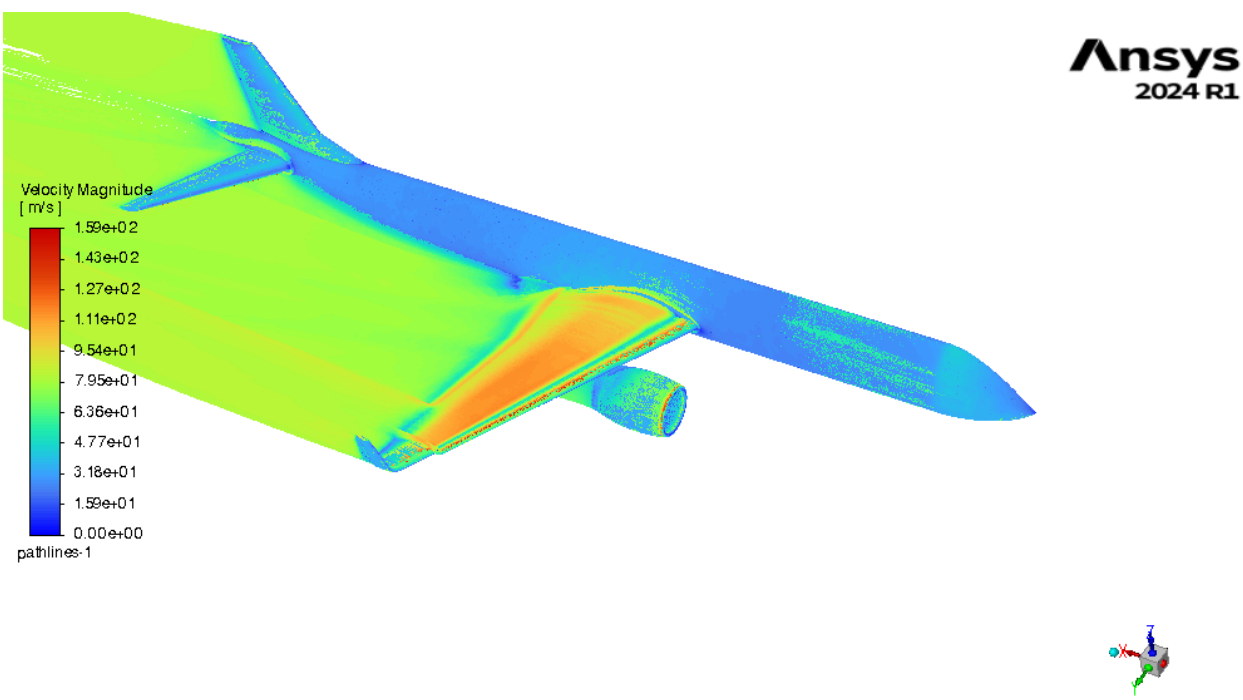


Figure 13: Velocity Contour

## Structral Analysis

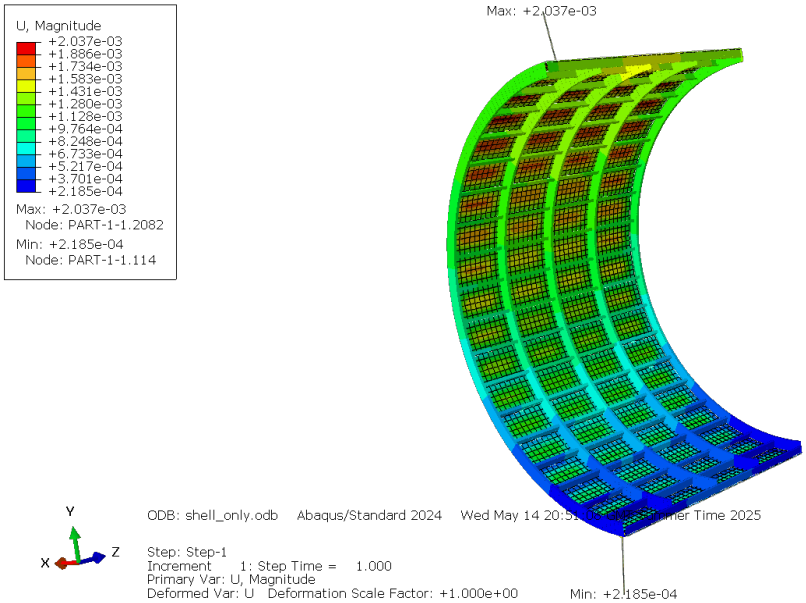


Figure 14: Deformation due to internal Pressure

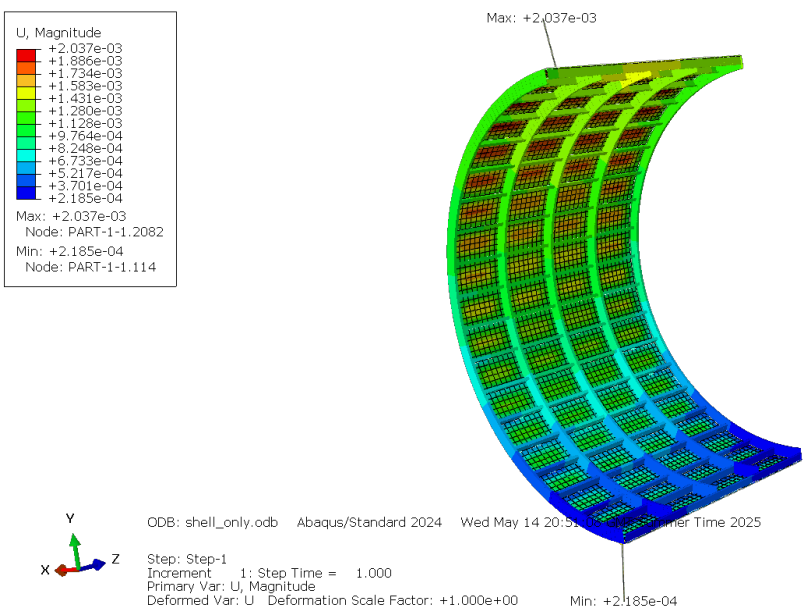


Figure 15: Stress due to internal Pressure

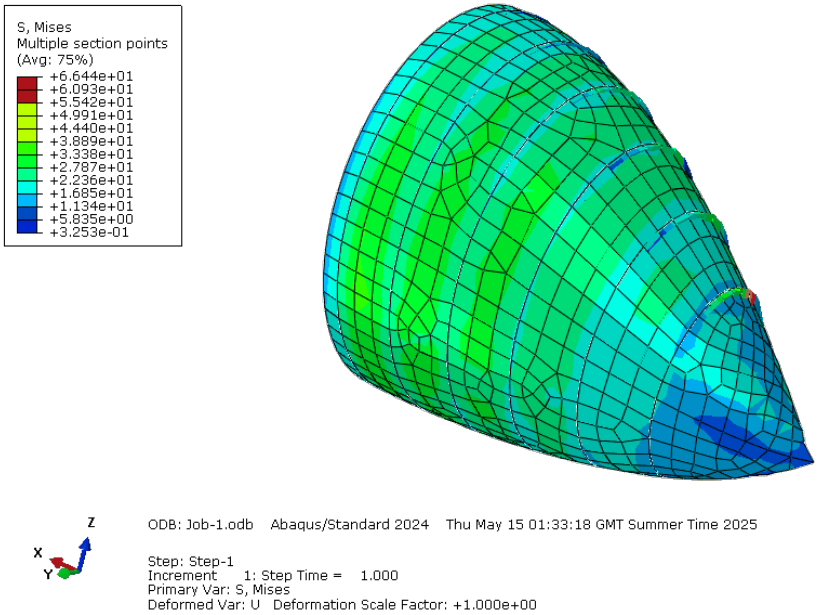


Figure 16: Stress due to internal Pressure

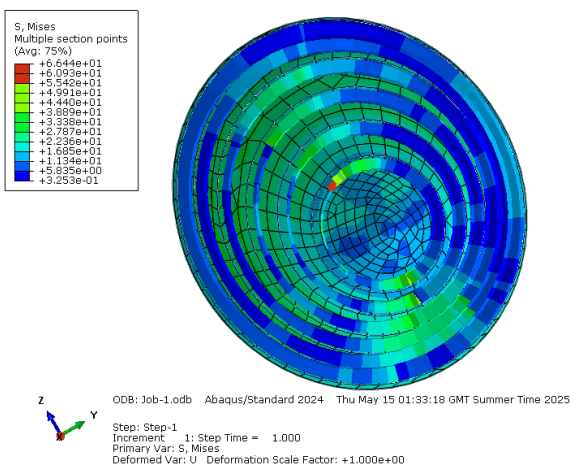


Figure 17: Stress due to internal Pressure View-2

# Project 1 : Design and analyis of Dash 8 Q300 Wing

Designed a wing using CATIA V5 with NACA 23015 airfoil. Incorporated 35 ribs and 2 spars for structural stability and performed FEA using CATIA's built-in tools. Achieved a Factor of Safety (FOS) of 2 under critical loading.

**Design**

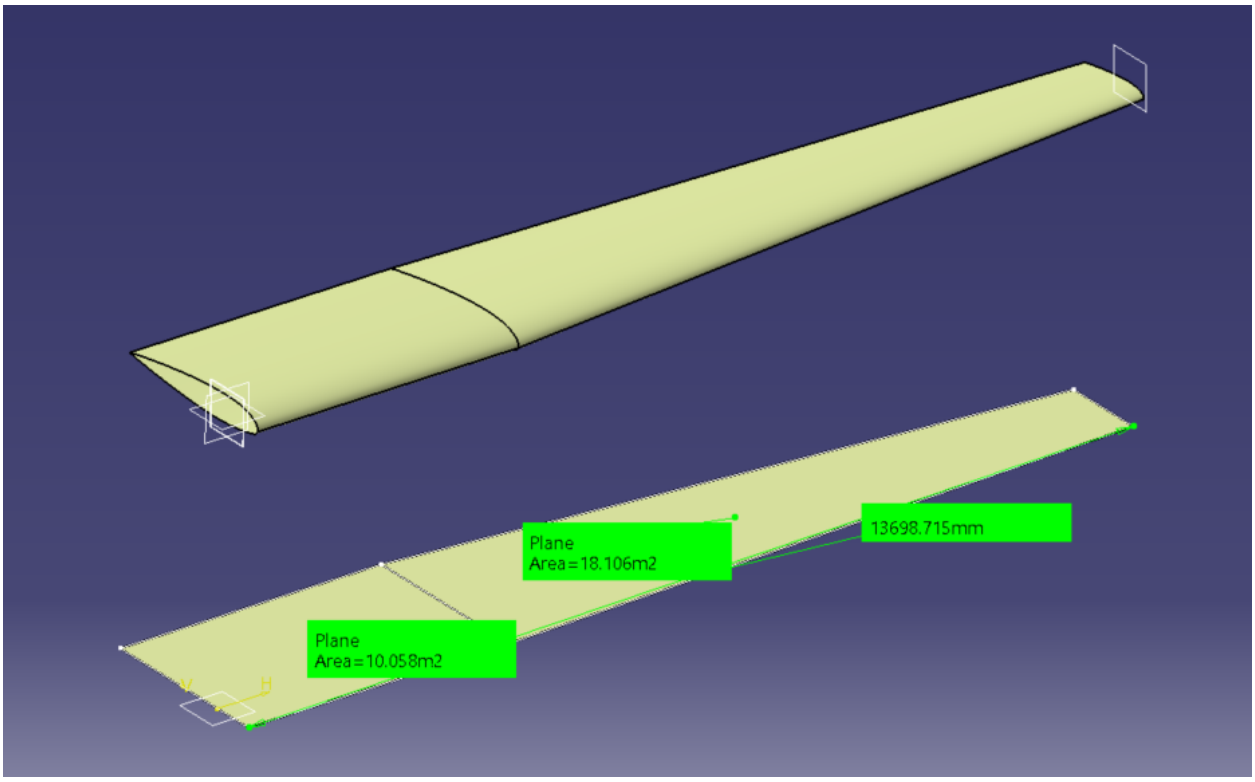


Figure 18: Wing with Surface area 28 $m^2$

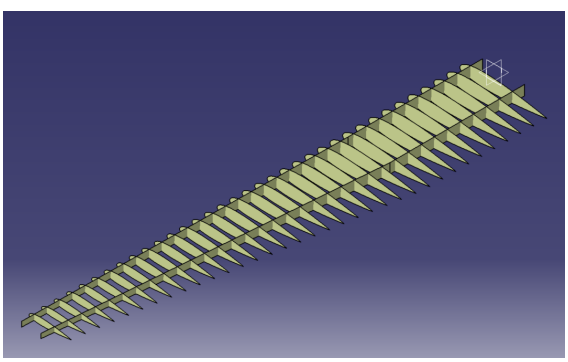

Figure 19: Internal Structure of the wing

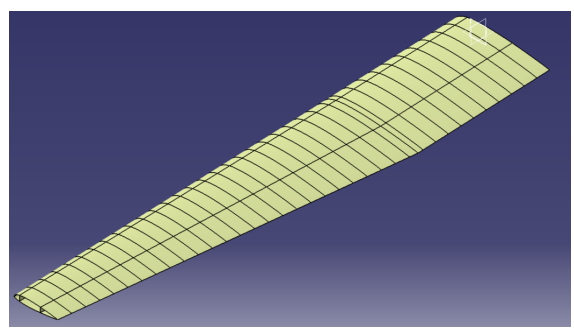

Figure 20: Wing with ribs and Spars

**FEA**

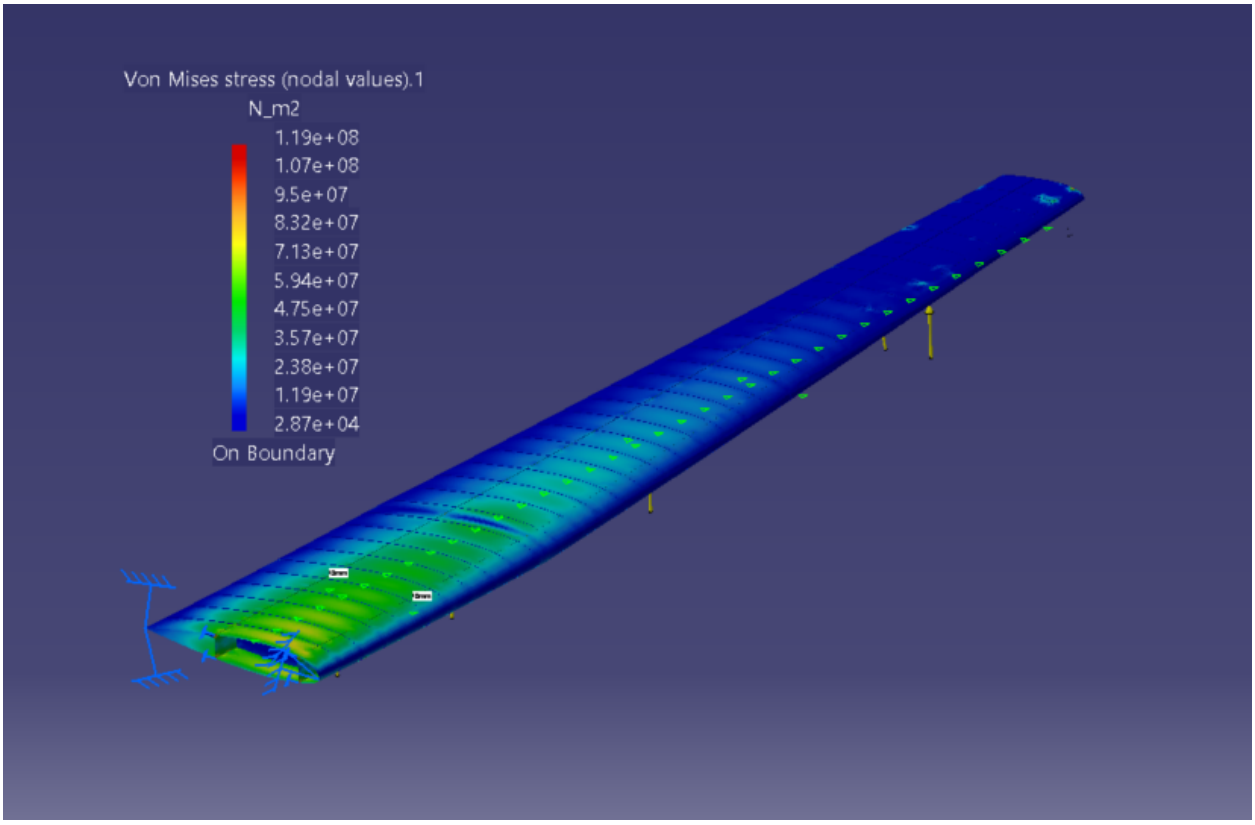


Figure 21: Stress generated due aerodynamic loads

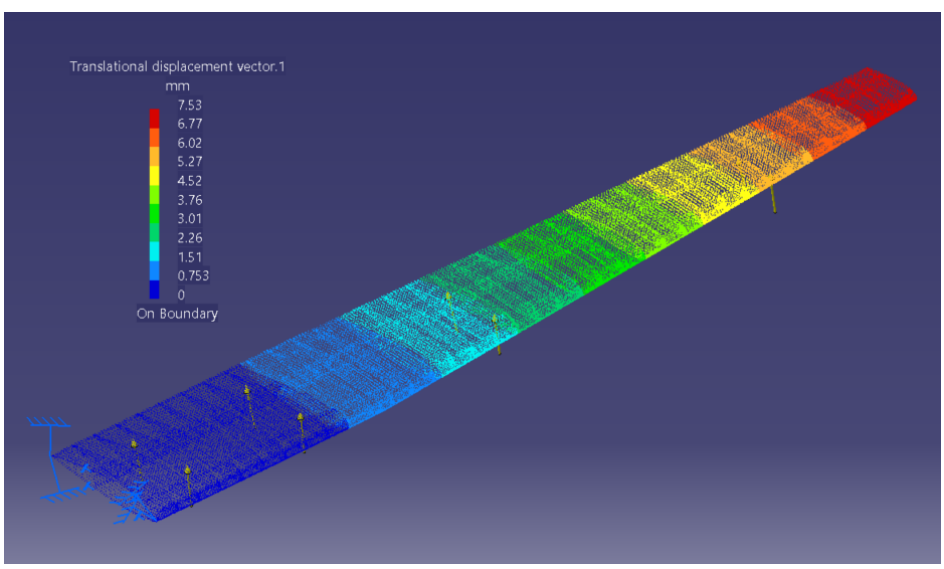


Figure 22: Displacement of the wing due to aerodynamic loads