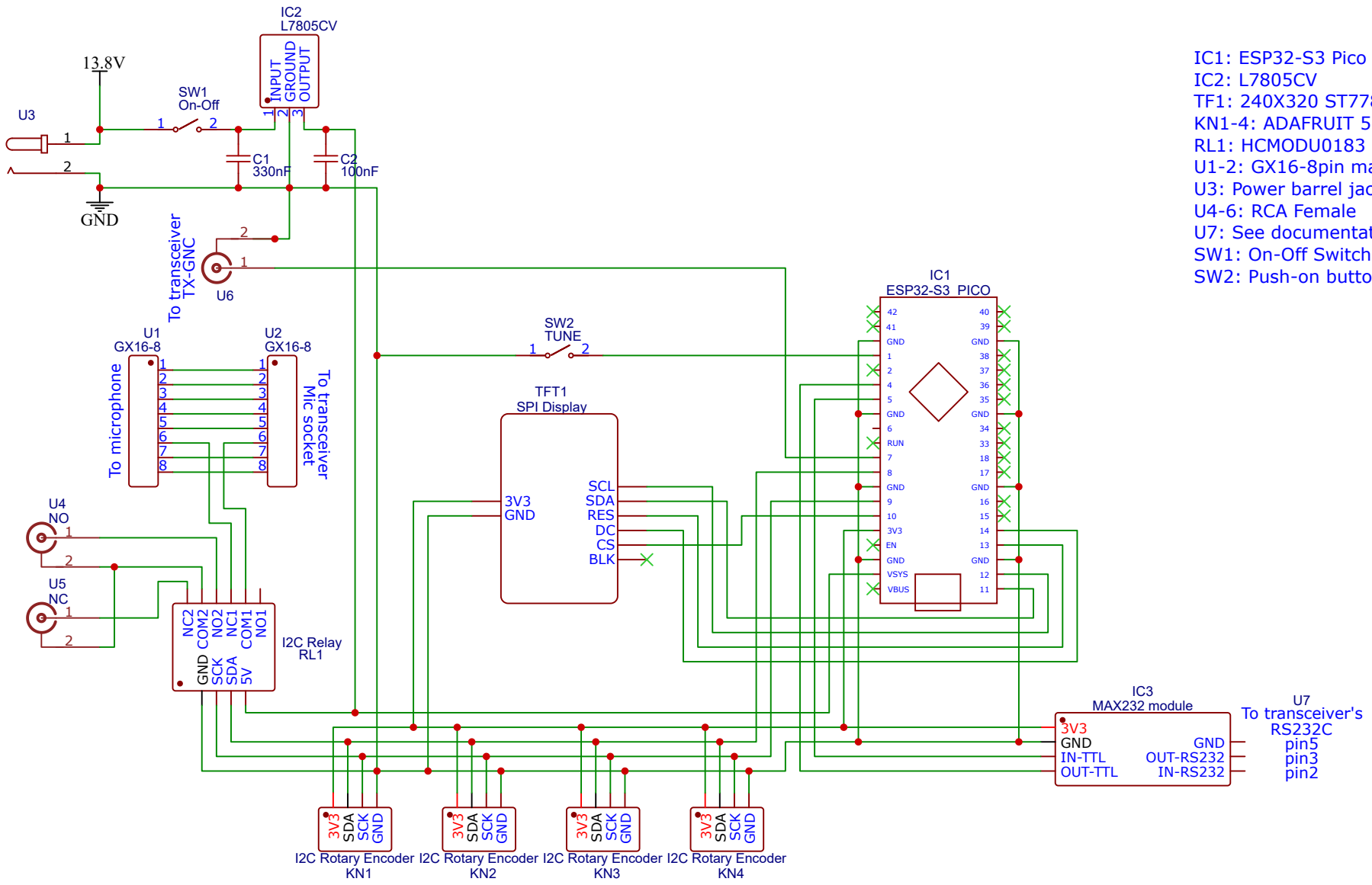

IC1: ESP32-S3 Pico dev board
IC2: L7805CV
TF1: 240X320 ST7789V SPI
KN1-4: ADAFRUIT 5880
RL1: HCMODU0183
U1-2: GX16-8pin male
U3: Power barrel jack
U4-6: RCA Female
U7: See documentation
SW1: On-Off Switch
SW2: Push-on button

TITLE: Automatic Tuner Controller with Knobs		REV: 1.0
EasyEDA	Company: N/A	Sheet: 1/1
	Date: 2024-08-23	Drawn By: SV1RQJ/F4VTR