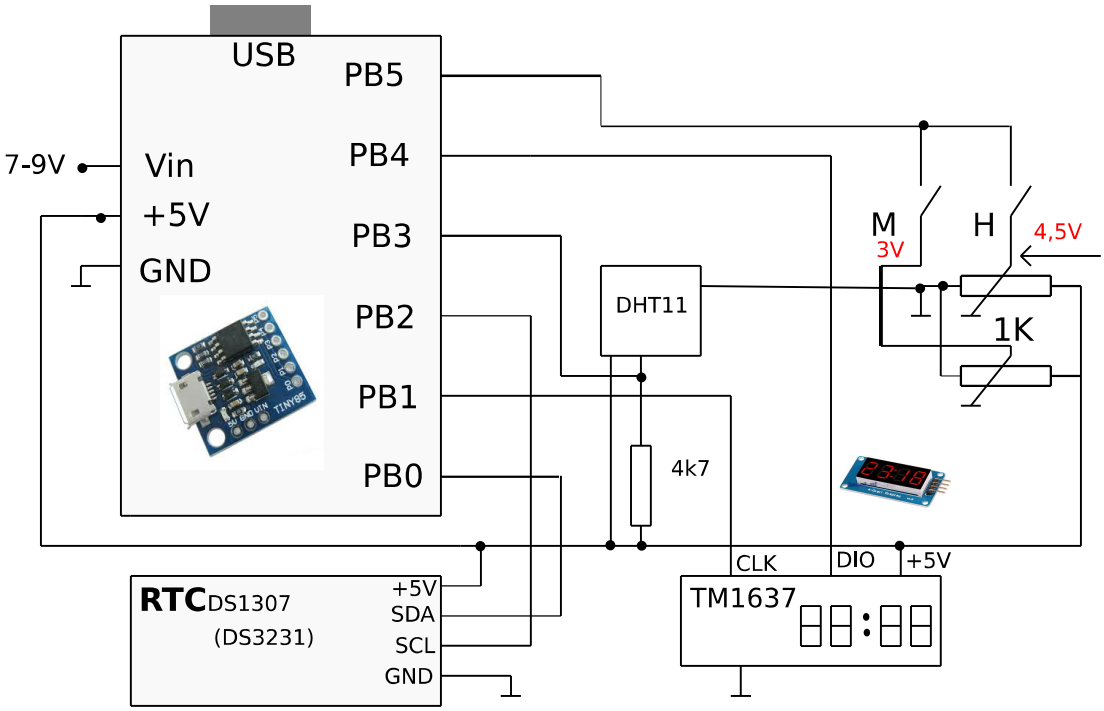
USB
PB5
PB4
PB3
PB2
PB1
PB0
7-9V
Vin
+5V
GND
DHT11
M
3V
H
4,5V
1K
4k7
CLK
DIO
+5V
TM1637
RTC DS1307
(DS3231)
+5V
SDA
SCL
GND

<