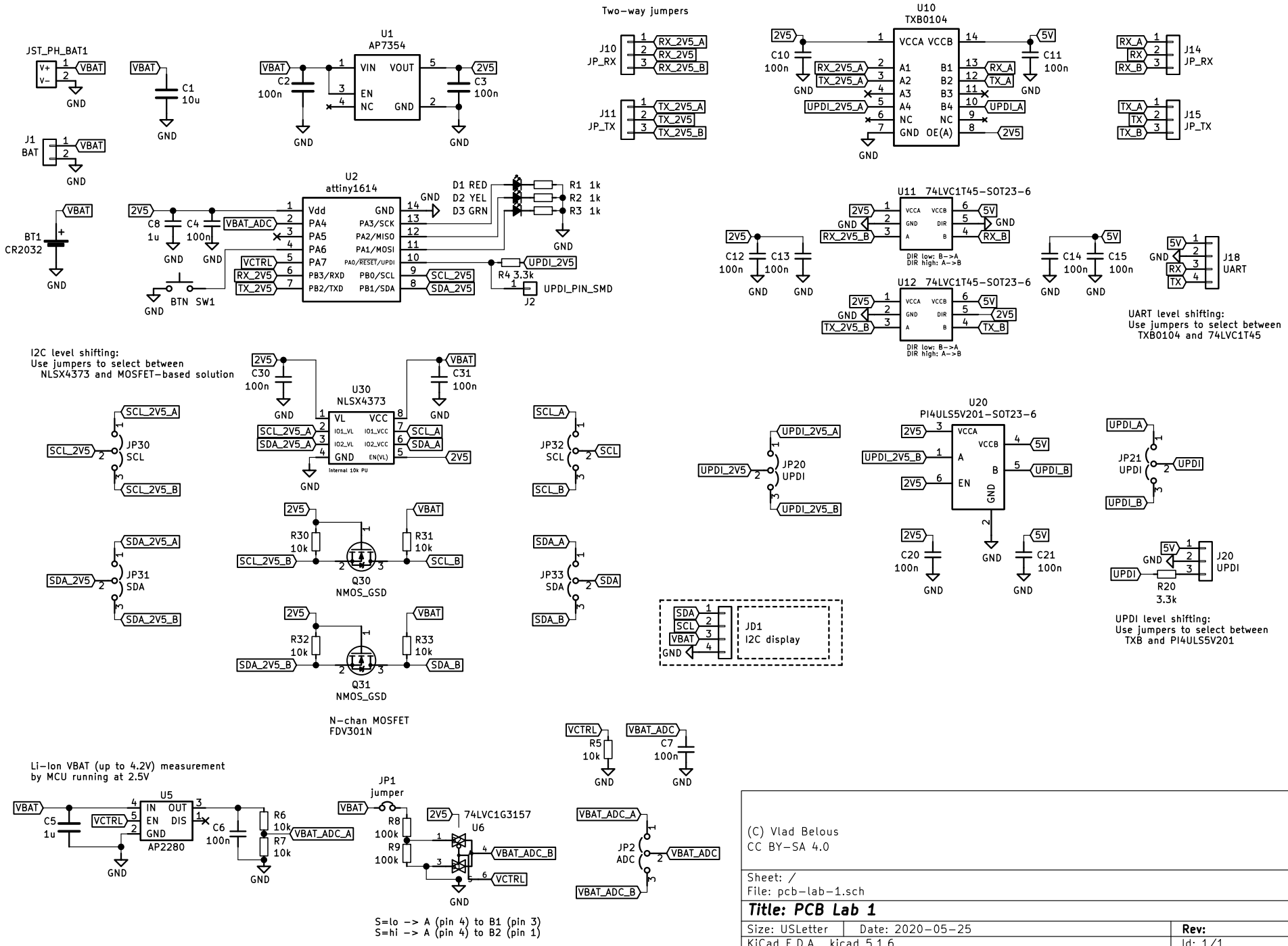

(C) Vlad Belous
CC BY−SA 4.0

Sheet: /
File: pcb−lab−1.sch

Title: PCB Lab 1

Size: USLetter	Date: 2020−05−25	Rev:
KiCad E.D.A. kicad 5.1.6		Id: 1/1