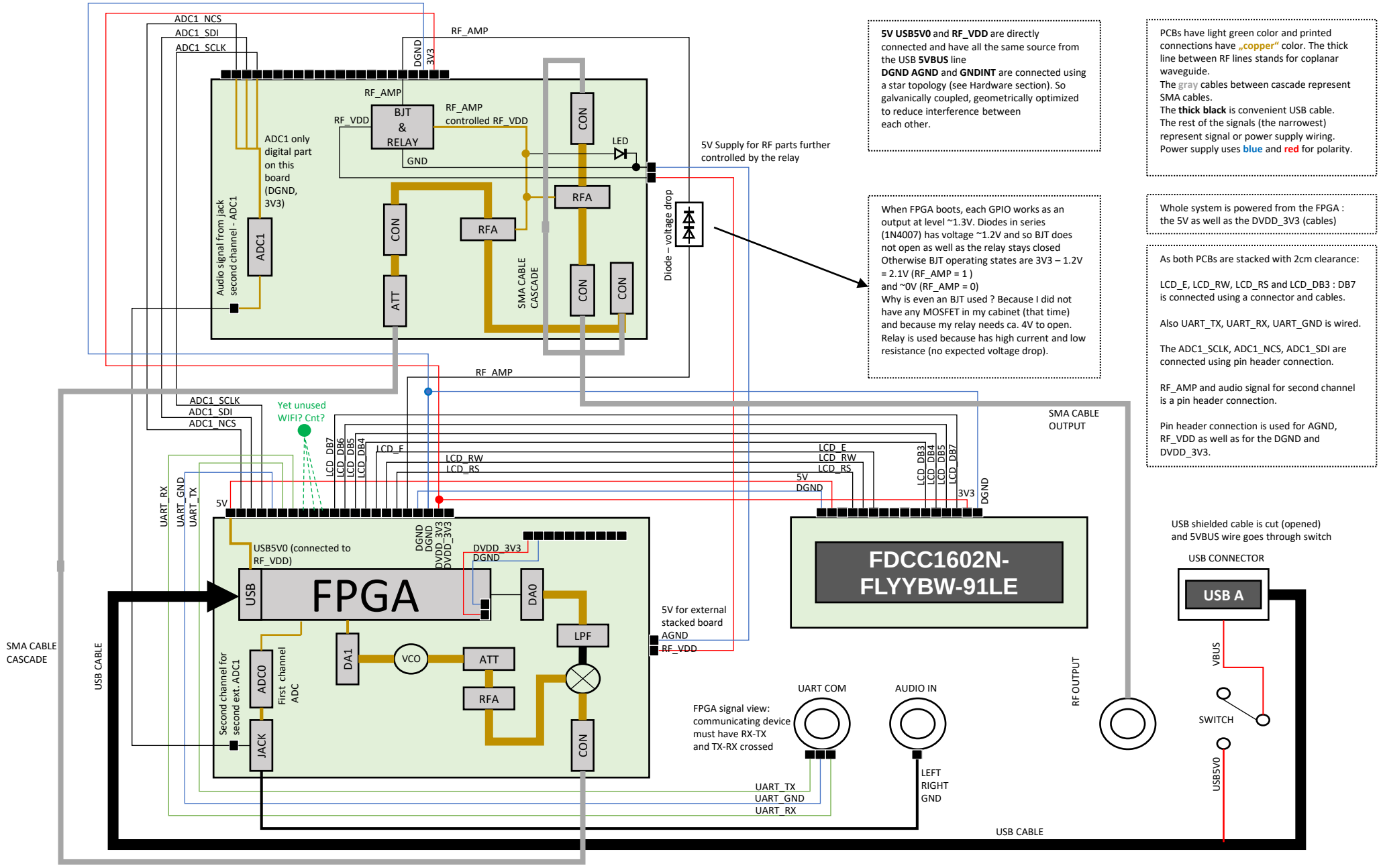

5V USB5V0 and **RF_VDD** are directly connected and have all the same source from the USB **5VBUS** line
DGND AGND and **GNDINT** are connected using a star topology (see Hardware section). So galvanically coupled, geometrically optimized to reduce interference between each other.

When FPGA boots, each GPIO works as an output at level ~1.3V. Diodes in series (1N4007) has voltage ~1.2V and so BJT does not open as well as the relay stays closed
Otherwise BJT operating states are 3V3 – 1.2V = 2.1V (RF_AMP = 1)
and ~0V (RF_AMP = 0)
Why is even an BJT used ? Because I did not have any MOSFET in my cabinet (that time) and because my relay needs ca. 4V to open.
Relay is used because has high current and low resistance (no expected voltage drop).

PCBs have light green color and printed connections have „copper“ color. The thick line between RF lines stands for coplanar waveguide.
The gray cables between cascade represent SMA cables.
The **thick black** is convenient USB cable.
The rest of the signals (the narrowest) represent signal or power supply wiring.
Power supply uses **blue** and **red** for polarity.

Whole system is powered from the FPGA : the 5V as well as the DVDD_3V3 (cables)

As both PCBs are stacked with 2cm clearance:

LCD_E, LCD_RW, LCD_RS and LCD_DB3 : DB7 is connected using a connector and cables.

Also UART_TX, UART_RX, UART_GND is wired.

The ADC1_SCLK, ADC1_NCS, ADC1_SDI are connected using pin header connection.

RF_AMP and audio signal for second channel is a pin header connection.

Pin header connection is used for AGND, RF_VDD as well as for the DGND and DVDD_3V3.