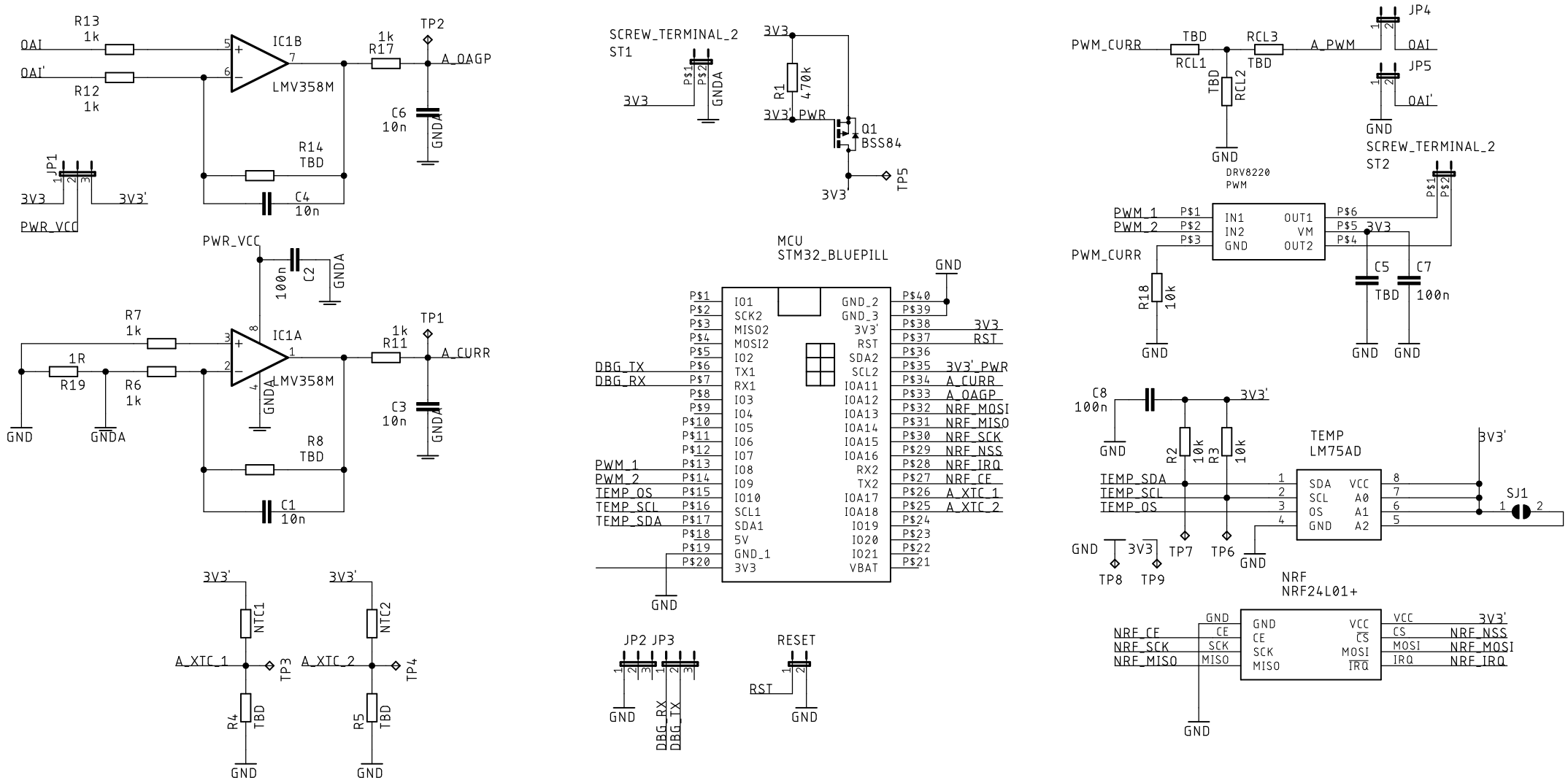
R13
1k
OAI
OAI'
R12
1k
IC1B
LMV358M
1k
R17
TP2
A_OAGP
C6
10n
GNDA
R14
TBD
C4
10n
JP1
3V3
3V3'
PWR_VCC
PWR_VCC
100n
C2
GNDA
R7
1k
IC1A
LMV358M
1k
R11
TP1
A_CURR
1R
R19
R6
1k
GND
GNDA
C3
10n
R8
TBD
C1
10n
3V3'
NTC1
A_XTC_1
TP3
R4
TBD
GND
3V3'
NTC2
A_XTC_2
TP4
R5
TBD
GND
SCREW_TERMINAL_2
ST1
3V3
GNDA
3V3
R1
470k
3V3'_PWR
Q1
BSS84
3V3
TP5
MCU
STM32_BLUEPILL
GND
DBG_TX
DBG_RX
PWM_1
PWM_2
TEMP_OS
TEMP_SCL
TEMP_SDA
GND
3V3
RST
3V3'_PWR
A_CURR
A_OAGP
NRF_MOSI
NRF_MISO
NRF_SCK
NRF_NSS
NRF_IRQ
NRF_CE
A_XTC_1
A_XTC_2
JP2 JP3
GND
DBG_RX
DBG_TX
RESET
RST
GND
PWM_CURR
TBD
RCL1
RCL3
A_PWM
JP4
OAI
TBD
RCL2
JP5
OAI'
GND
GND
DRV8220
PWM
SCREW_TERMINAL_2
ST2
PWM_1
PWM_2
PWM_CURR
IN1
IN2
GND
OUT1
VM
OUT2
3V3
R18
10k
C5
TBD
C7
100n
GND
GND
GND
C8
100n
3V3'
GND
R2
10k
R3
10k
TEMP
LM75AD
3V3'
TEMP_SDA
TEMP_SCL
TEMP_OS
SDA
SCL
OS
GND
VCC
A0
A1
A2
SJ1
GND
3V3
TP7
TP6
GND
TP8
TP9
NRF
NRF24L01+
NRF_CE
NRF_SCK
NRF_MISO
GND
CE
SCK
MISO
VCC
CS
MOSI
IRQ
3V3'
NRF_NSS
NRF_MOSI
NRF_IRQ
GND