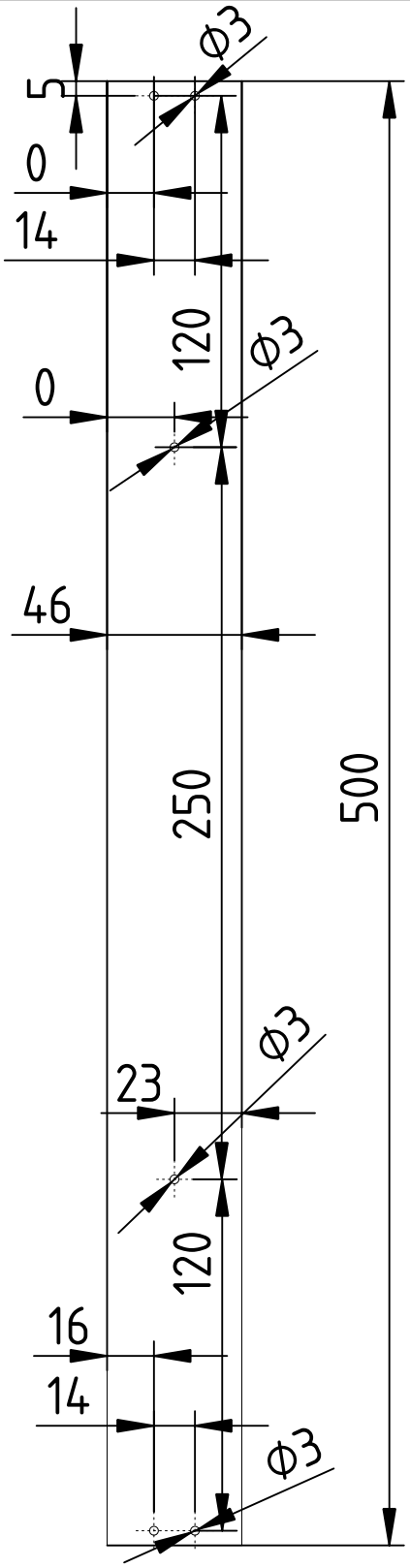

Сверху

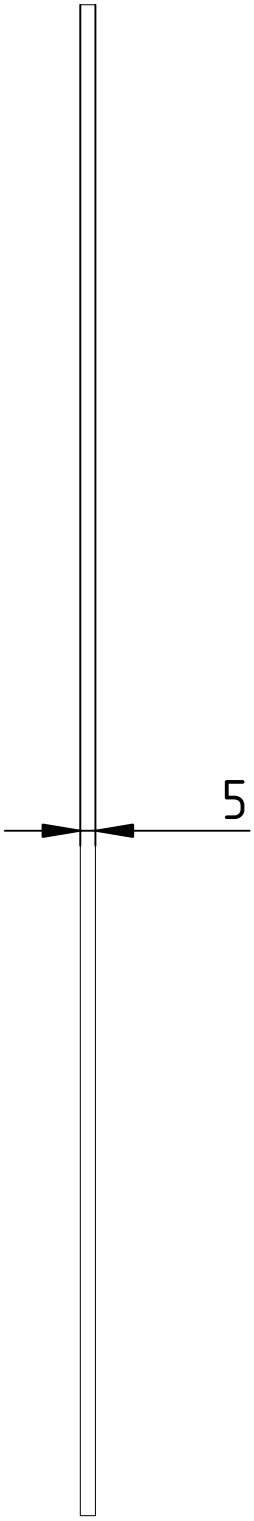

Сбоку

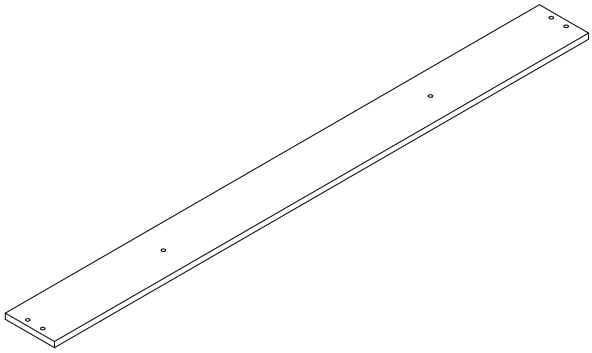

Общий вид

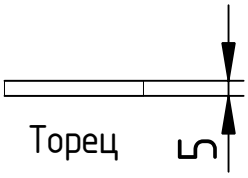

Торец

Author: Вдовин В.А. Appr.: APPROVER NAME	Legal owner: Вдовин В.А.	Scale: 2/5 Toler.: +/- ?	Sheet: 4 Size: A4
TITLE: FreeCAD Верхняя часть желоба		Part material: PM Part number: PN Drawing no.: DN	
Document type: Mechanical assembly drawing		Date: 14.12.2022	Revision: REV A

(R) DO NOT DUPLICATE THIS DRAWING TO THIRD PARTIES WITHOUT OWNER'S PERMISSION !