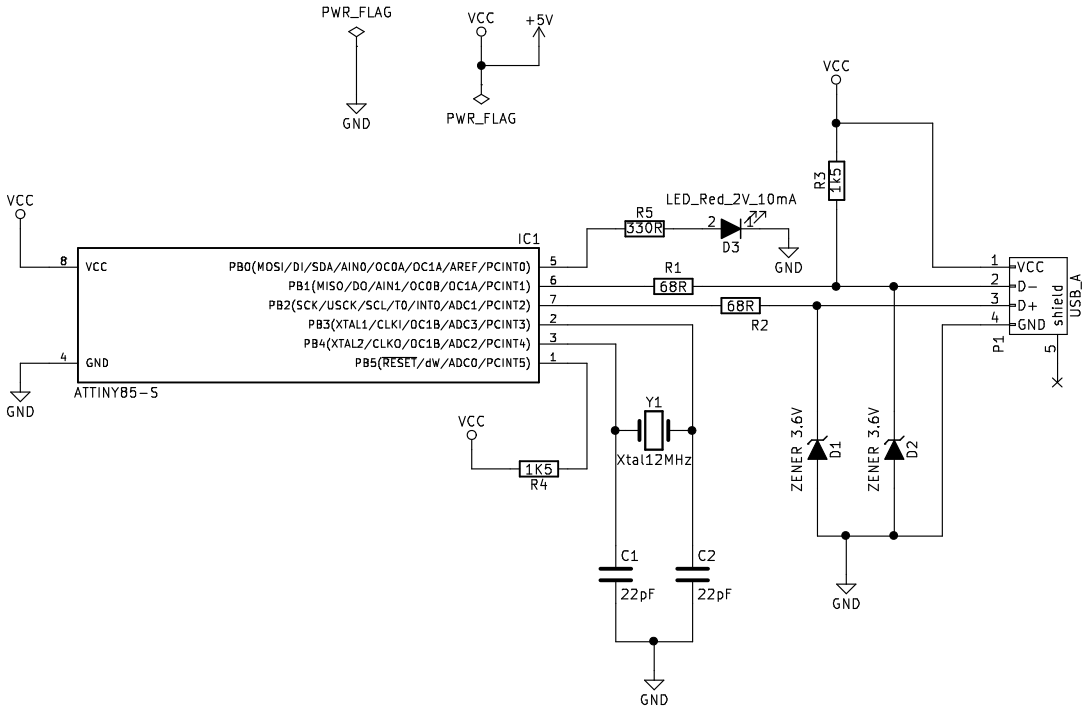

Sheet: /
File: Macro_keyboard.sch

Title: Macro keyboard

Size: A4	Date: 2017-11-25	**Rev: v2.0**
KiCad E.D.A. kicad 4.0.7-e2-637658ubuntu16.04.1		Id: 1/1